GROUP 90

CIRCUIT DIAGRAMS

CONTENTS

Continued on next page

Continued on next page

J/B

M1901000200660

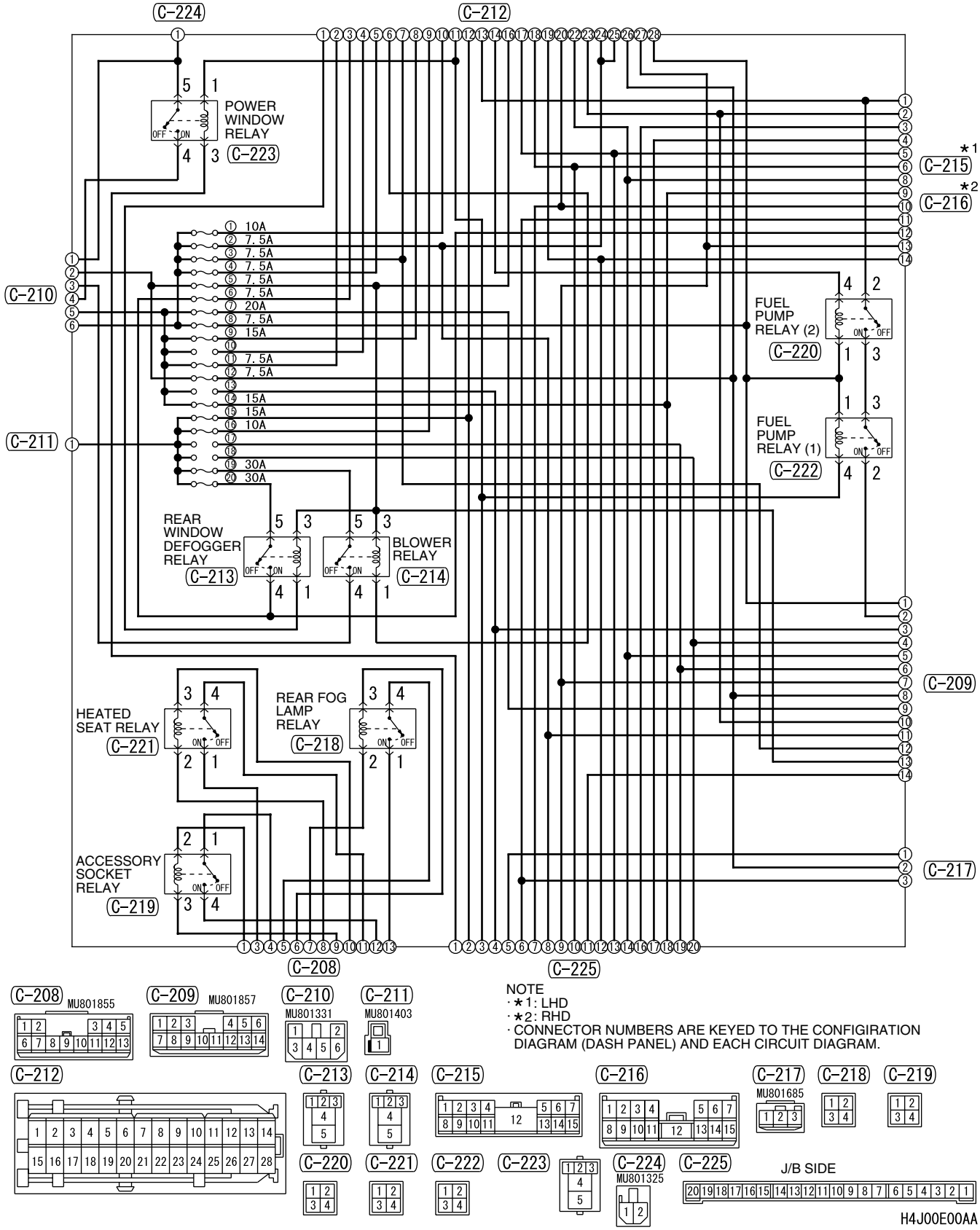

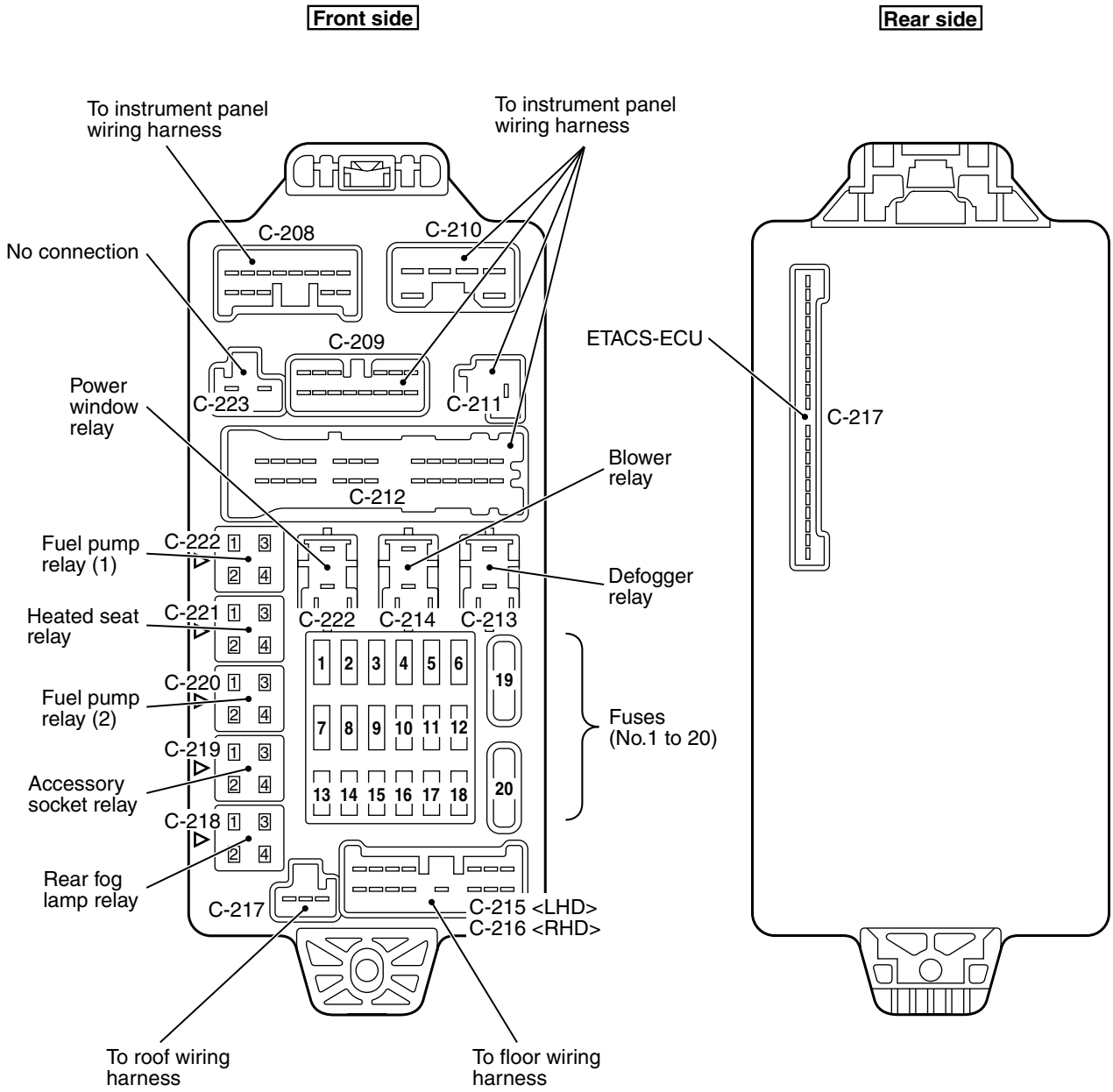

NOTE:

- *The triangle mark on the relay housing should face that on the J/B and the relay box.*

J/C <LHD>

M1901014200607

NOTE: IN ACTUAL VEHICLES, ANY OF THE TERMINALS CONNECTED IN J/C ARE USED. THE TERMINAL ARRANGEMENT DESCRIBED IN THE CIRCUIT DIAGRAM MAY NOT BE IDENTICAL TO THOSE OF THE VEHICLES.

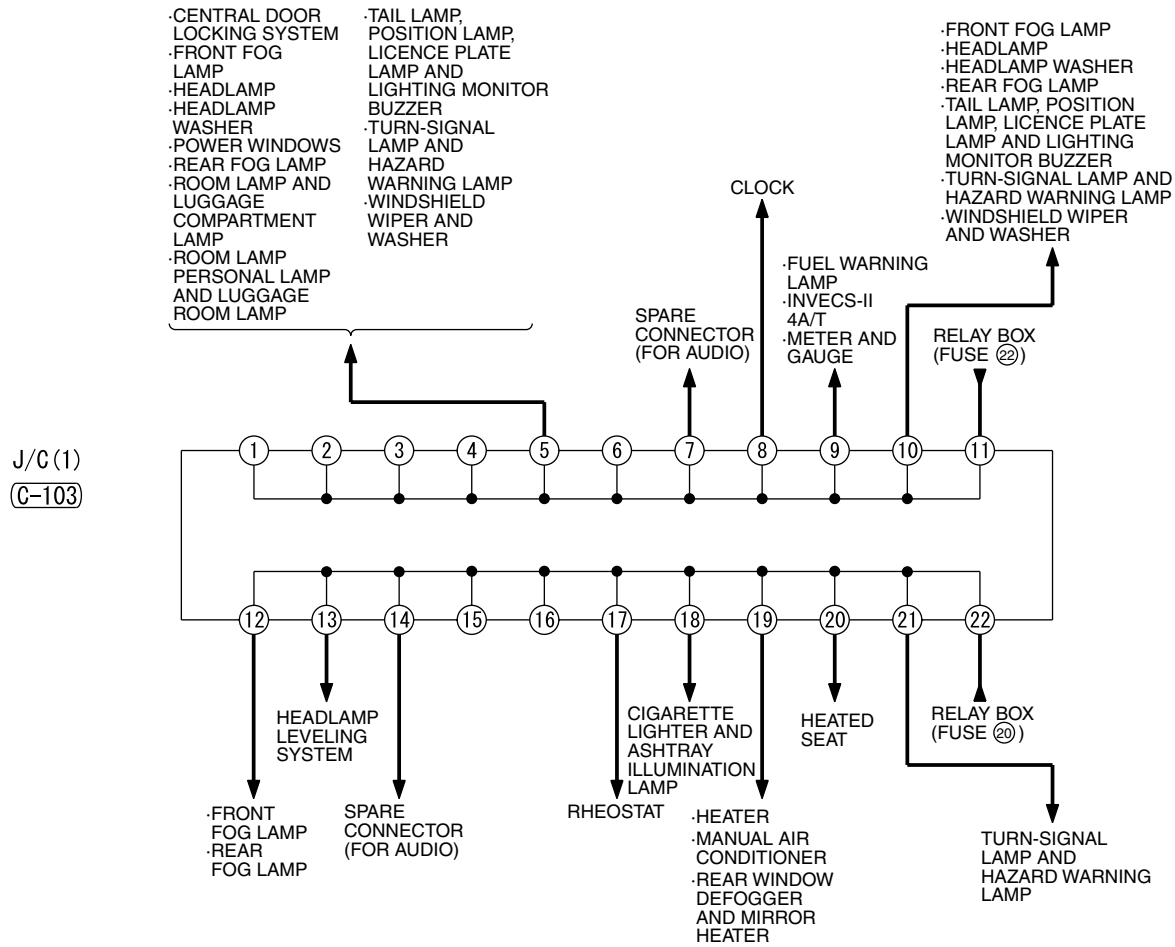

C-35

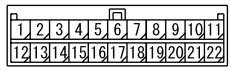

C-103

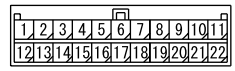

H4J00E01AA

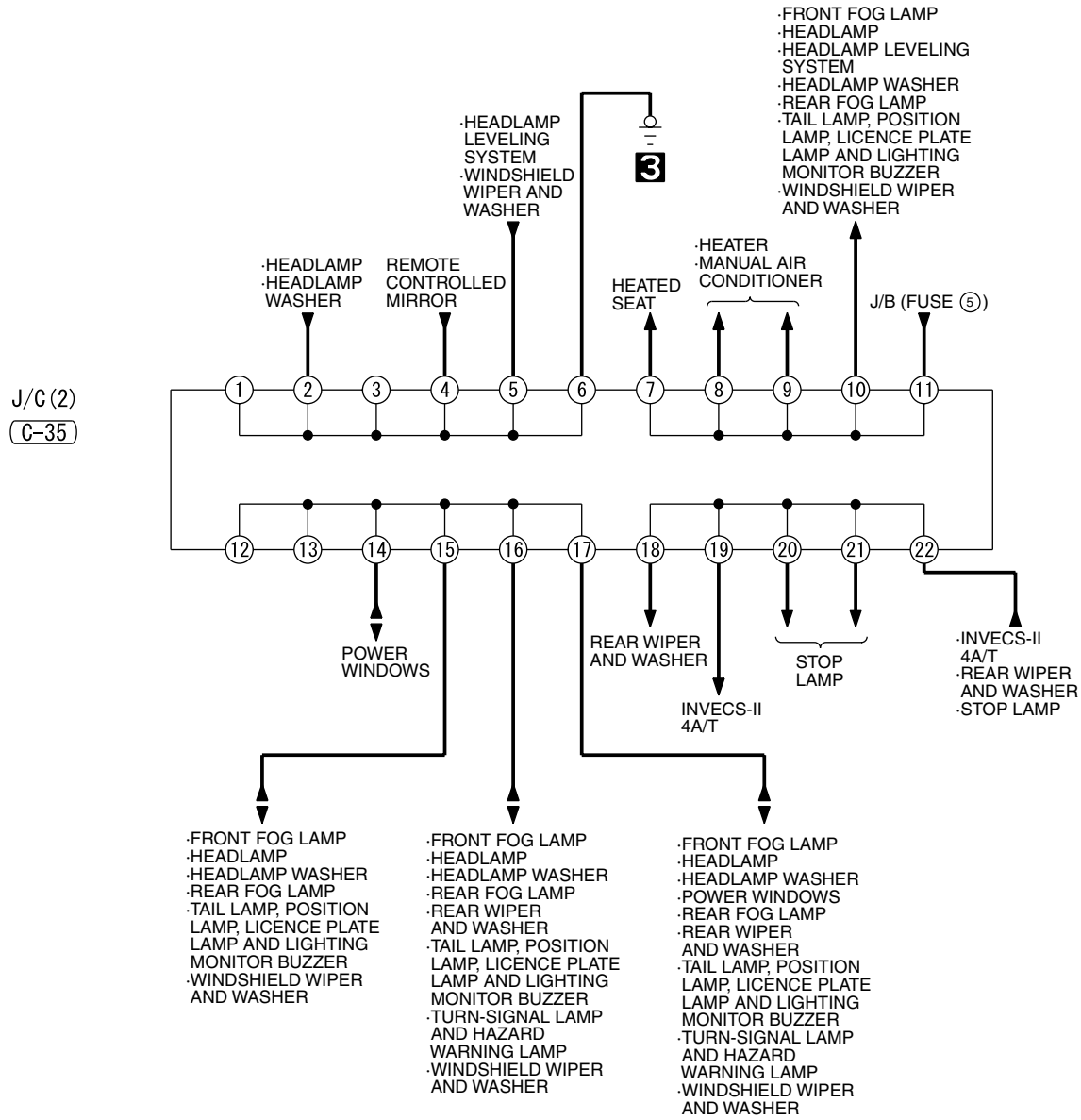
J/C (2)
C-35
1
2
3
4
5
6
7
8
9
10
11
12
13
14
15
16
17
18
19
20
21
22
·HEADLAMP
·HEADLAMP WASHER
REMOTE CONTROLLED MIRROR
·HEADLAMP LEVELING SYSTEM
·WINDSHIELD WIPER AND WASHER
3
HEATED SEAT
·HEATER
·MANUAL AIR CONDITIONER
·FRONT FOG LAMP
·HEADLAMP
·HEADLAMP LEVELING SYSTEM
·HEADLAMP WASHER
·REAR FOG LAMP
·TAIL LAMP, POSITION LAMP, LICENCE PLATE LAMP AND LIGHTING MONITOR BUZZER
·WINDSHIELD WIPER AND WASHER
J/B (FUSE 5)
POWER WINDOWS
REAR WIPER AND WASHER
INVECS-II 4A/T
STOP LAMP
·INVECS-II 4A/T
·REAR WIPER AND WASHER
·STOP LAMP
·FRONT FOG LAMP
·HEADLAMP
·HEADLAMP WASHER
·REAR FOG LAMP
·TAIL LAMP, POSITION LAMP, LICENCE PLATE LAMP AND LIGHTING MONITOR BUZZER
·WINDSHIELD WIPER AND WASHER
·FRONT FOG LAMP
·HEADLAMP
·HEADLAMP WASHER
·REAR FOG LAMP
·REAR WIPER AND WASHER
·TAIL LAMP, POSITION LAMP, LICENCE PLATE LAMP AND LIGHTING MONITOR BUZZER
·TURN-SIGNAL LAMP AND HAZARD WARNING LAMP
·WINDSHIELD WIPER AND WASHER
·FRONT FOG LAMP
·HEADLAMP
·HEADLAMP WASHER
·POWER WINDOWS
·REAR FOG LAMP
·REAR WIPER AND WASHER
·TAIL LAMP, POSITION LAMP, LICENCE PLATE LAMP AND LIGHTING MONITOR BUZZER
·TURN-SIGNAL LAMP AND HAZARD WARNING LAMP
·WINDSHIELD WIPER AND WASHER

H4J00E01AB

J/C <LHD> (CONTINUED)

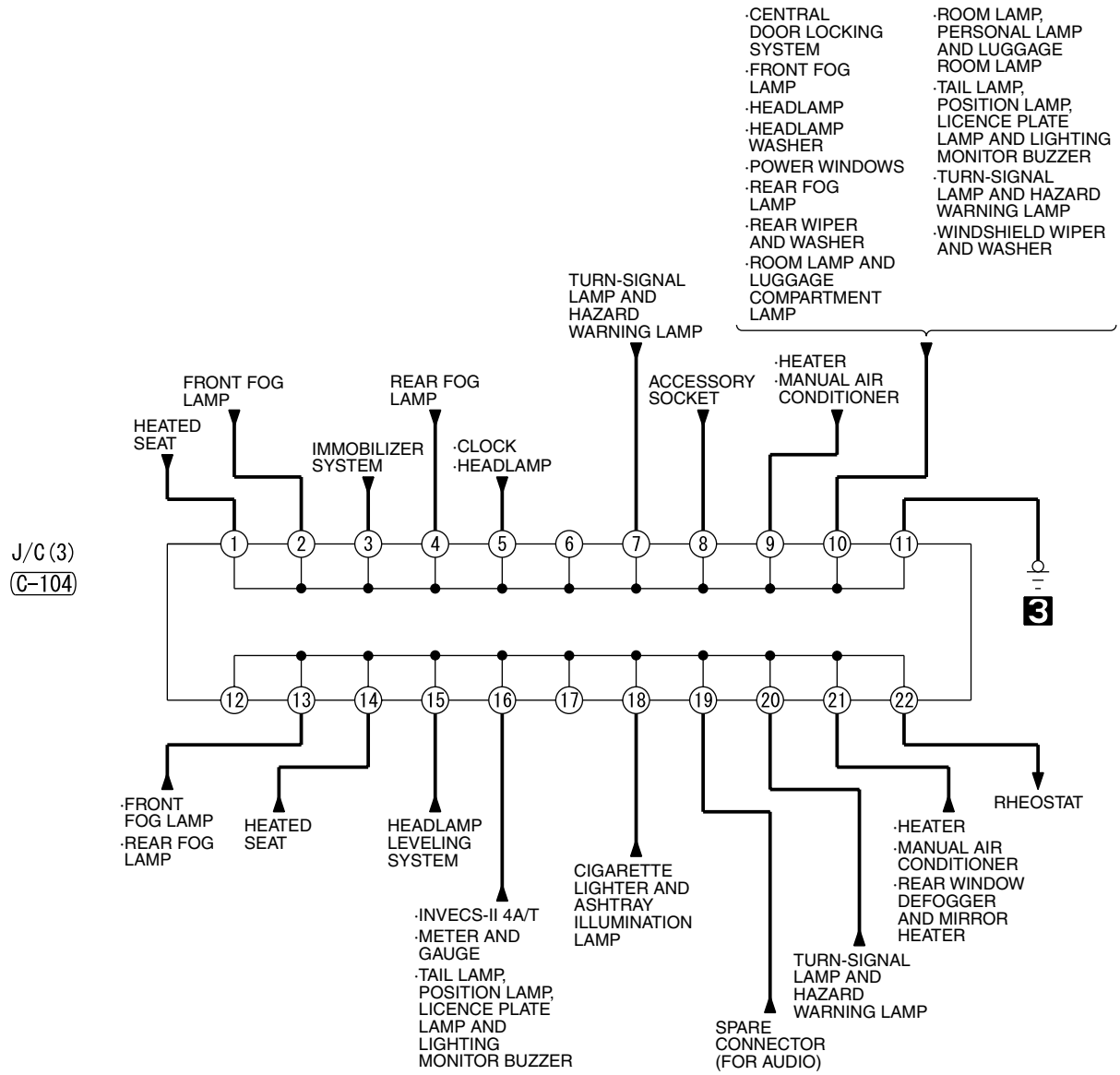

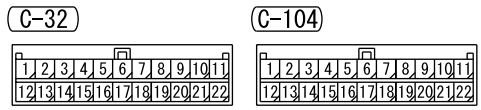

H4J00E01BA

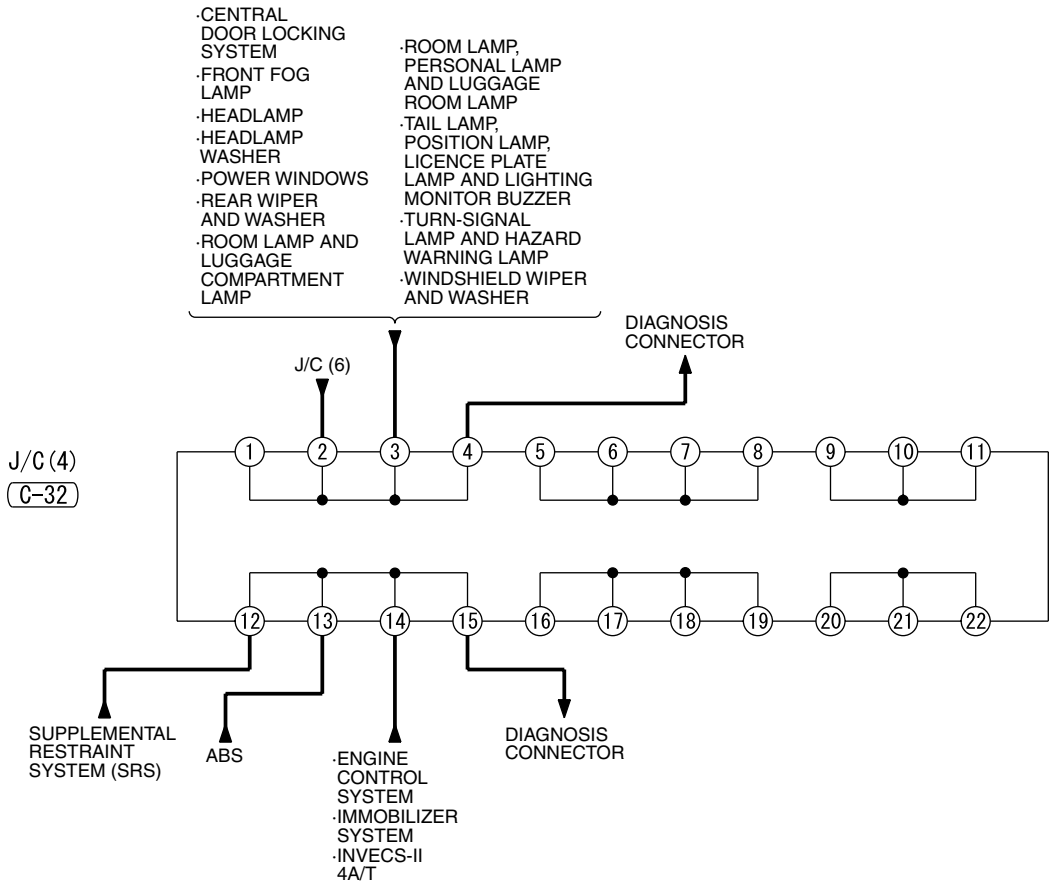
·CENTRAL DOOR LOCKING SYSTEM
·FRONT FOG LAMP
·HEADLAMP
·HEADLAMP WASHER
·POWER WINDOWS
·REAR WIPER AND WASHER
·ROOM LAMP AND LUGGAGE COMPARTMENT LAMP
·ROOM LAMP, PERSONAL LAMP AND LUGGAGE ROOM LAMP
·TAIL LAMP, POSITION LAMP, LICENCE PLATE LAMP AND LIGHTING MONITOR BUZZER
·TURN-SIGNAL LAMP AND HAZARD WARNING LAMP
·WINDSHIELD WIPER AND WASHER
DIAGNOSIS CONNECTOR
J/C (6)
J/C (4)
C-32
1
2
3
4
5
6
7
8
9
10
11
12
13
14
15
16
17
18
19
20
21
22
SUPPLEMENTAL RESTRAINT SYSTEM (SRS)
ABS
·ENGINE CONTROL SYSTEM
·IMMOBILIZER SYSTEM
·INVECS-II 4A/T
DIAGNOSIS CONNECTOR

H4J00E01BB

J/C <LHD> (CONTINUED)

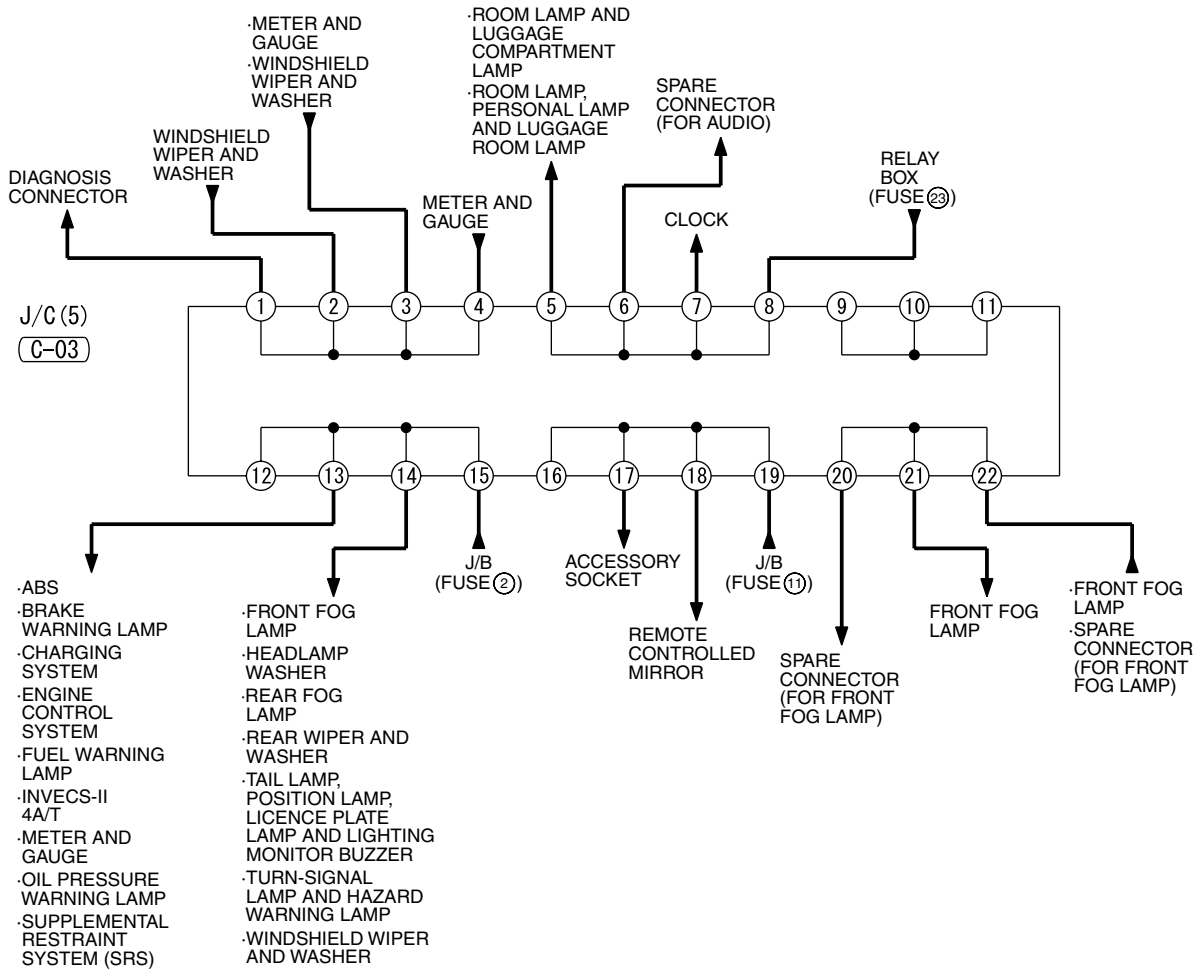

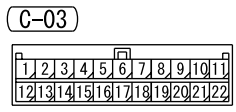

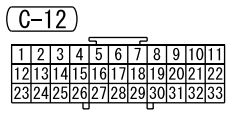

H4J00E01CA

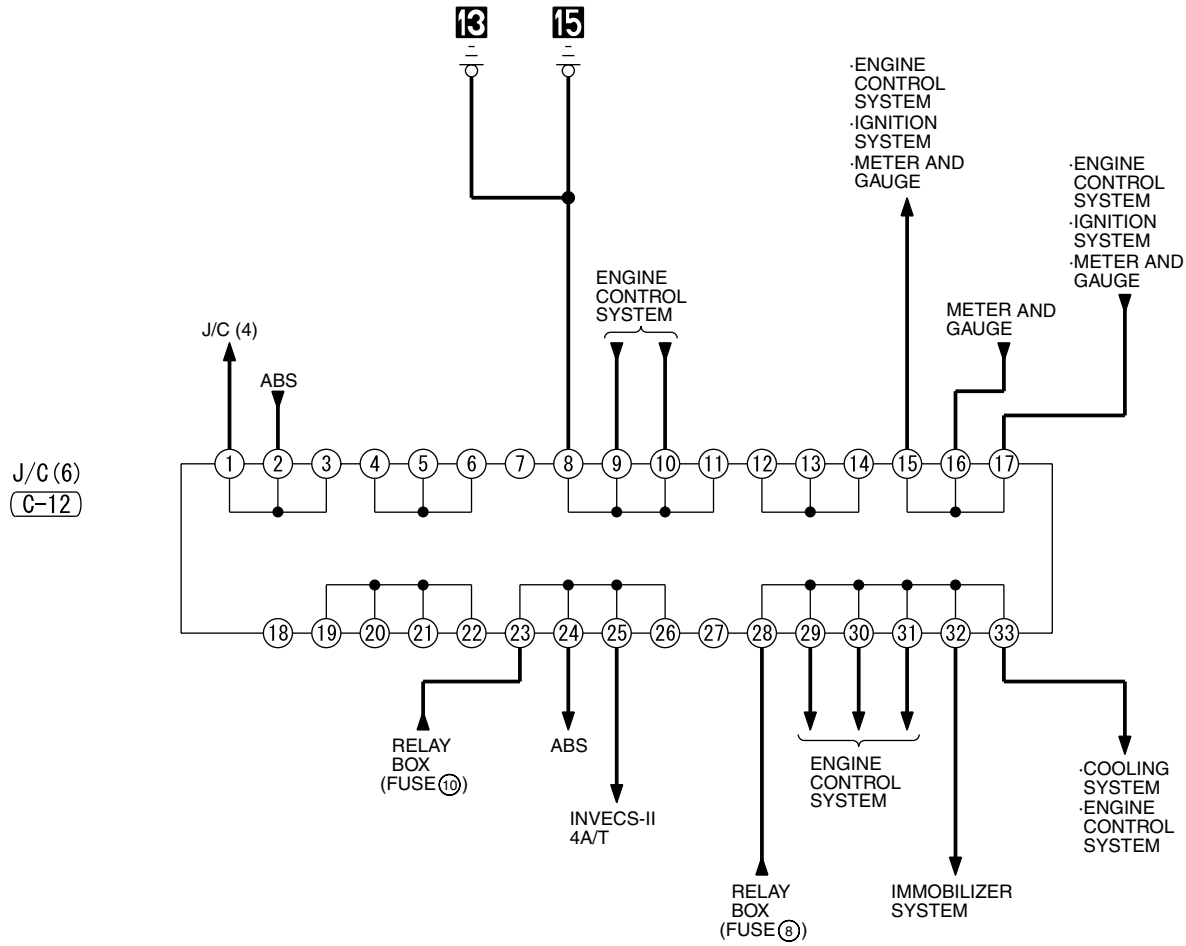
13
15
·ENGINE CONTROL SYSTEM
·IGNITION SYSTEM
·METER AND GAUGE
·ENGINE CONTROL SYSTEM
·IGNITION SYSTEM
·METER AND GAUGE
ENGINE CONTROL SYSTEM
METER AND GAUGE
J/C (4)
ABS
J/C (6)
C-12
1 2 3 4 5 6 7 8 9 10 11 12 13 14 15 16 17
18 19 20 21 22 23 24 25 26 27 28 29 30 31 32 33
RELAY BOX (FUSE 10)
ABS
INVECS-II 4A/T
ENGINE CONTROL SYSTEM
·COOLING SYSTEM
·ENGINE CONTROL SYSTEM
RELAY BOX (FUSE 8)
IMMOBILIZER SYSTEM

H4J00E01CB

J/C <RHD>

M1901014200618

NOTE: IN ACTUAL VEHICLES, ANY OF THE TERMINALS CONNECTED IN J/C ARE USED. THE TERMINAL ARRANGEMENT DESCRIBED IN THE CIRCUIT DIAGRAM MAY NOT BE IDENTICAL TO THOSE OF THE VEHICLES.

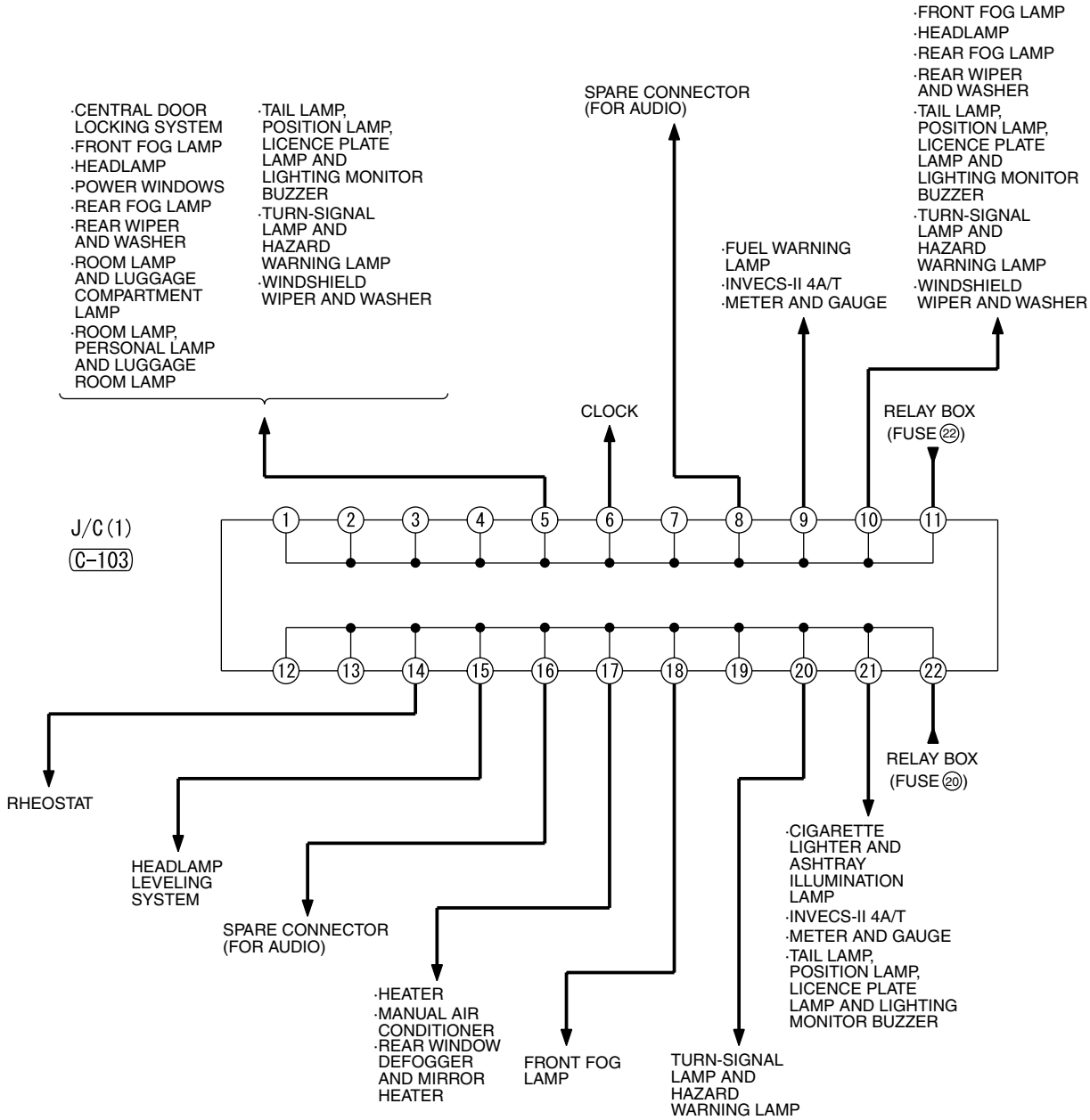

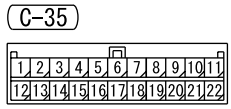

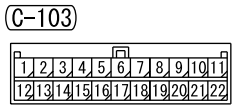

H4J00E02AA

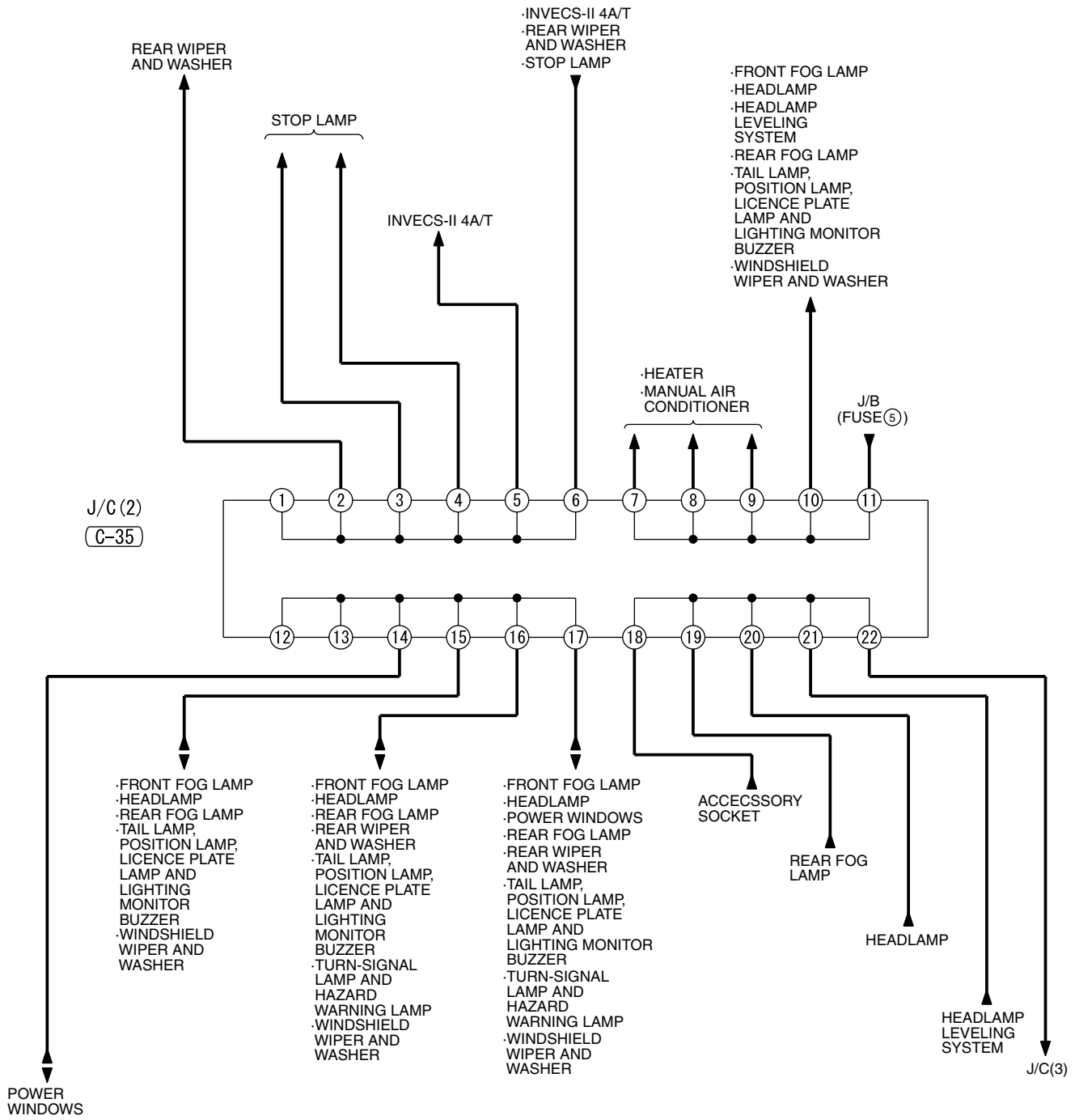
REAR WIPER AND WASHER
STOP LAMP
INVECS-II 4A/T
·INVECS-II 4A/T
·REAR WIPER AND WASHER
·STOP LAMP
·FRONT FOG LAMP
·HEADLAMP
·HEADLAMP LEVELING SYSTEM
·REAR FOG LAMP
·TAIL LAMP, POSITION LAMP, LICENCE PLATE LAMP AND LIGHTING MONITOR BUZZER
·WINDSHIELD WIPER AND WASHER
·HEATER
·MANUAL AIR CONDITIONER
J/B (FUSE 5)
J/C (2)
C-35
1 2 3 4 5 6 7 8 9 10 11
12 13 14 15 16 17 18 19 20 21 22
·FRONT FOG LAMP
·HEADLAMP
·REAR FOG LAMP
·TAIL LAMP, POSITION LAMP, LICENCE PLATE LAMP AND LIGHTING MONITOR BUZZER
·WINDSHIELD WIPER AND WASHER
·FRONT FOG LAMP
·HEADLAMP
·REAR FOG LAMP
·REAR WIPER AND WASHER
·TAIL LAMP, POSITION LAMP, LICENCE PLATE LAMP AND LIGHTING MONITOR BUZZER
·TURN-SIGNAL LAMP AND HAZARD WARNING LAMP
·WINDSHIELD WIPER AND WASHER
·FRONT FOG LAMP
·HEADLAMP
·POWER WINDOWS
·REAR FOG LAMP
·REAR WIPER AND WASHER
·TAIL LAMP, POSITION LAMP, LICENCE PLATE LAMP AND LIGHTING MONITOR BUZZER
·TURN-SIGNAL LAMP AND HAZARD WARNING LAMP
·WINDSHIELD WIPER AND WASHER
ACCECSSORY SOCKET
REAR FOG LAMP
HEADLAMP
HEADLAMP LEVELING SYSTEM
J/C(3)
POWER WINDOWS

H4J00E02AB

J/C <RHD> (CONTINUED)

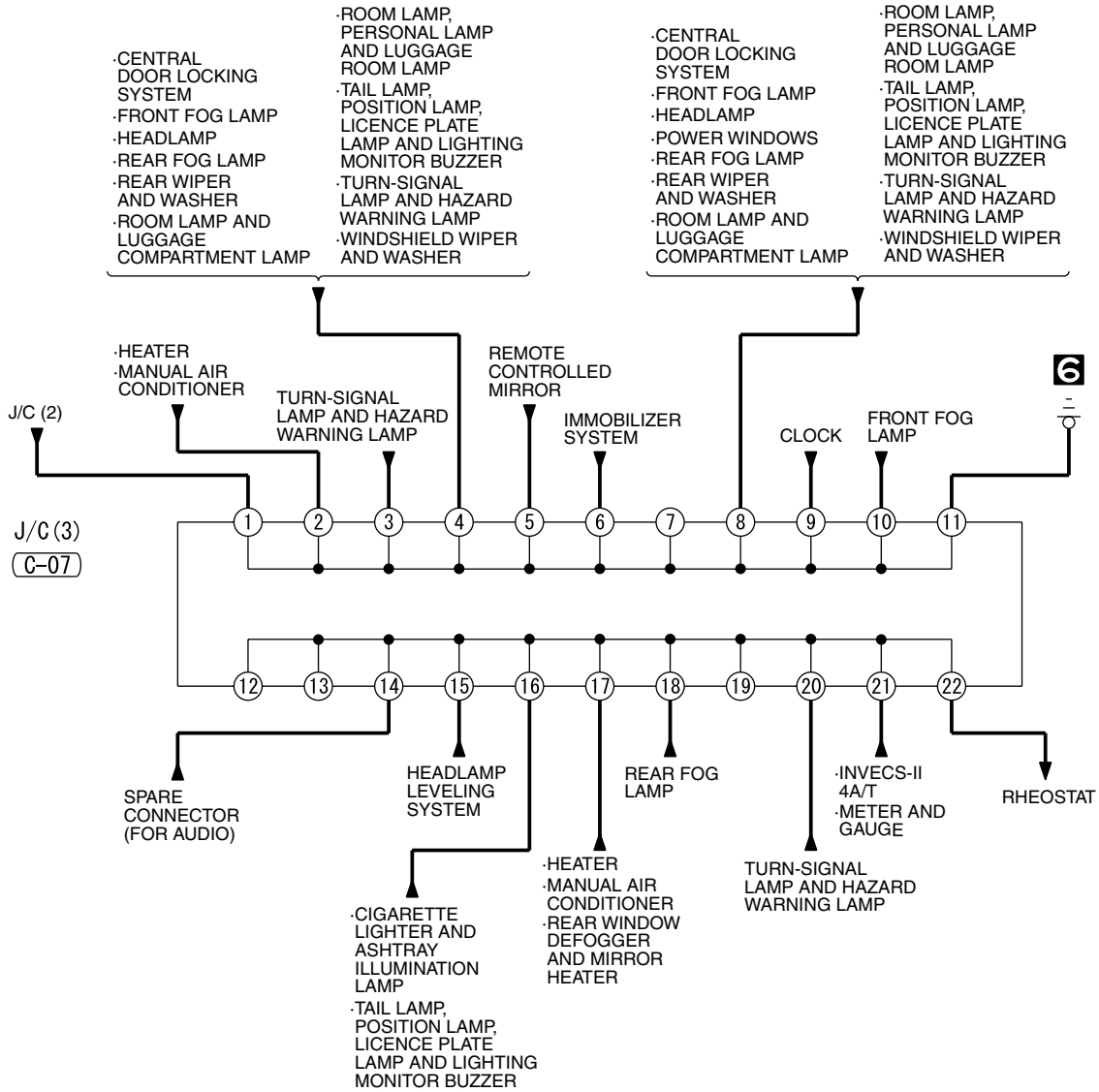

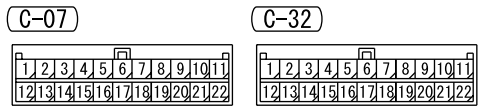

H4J00E02BA

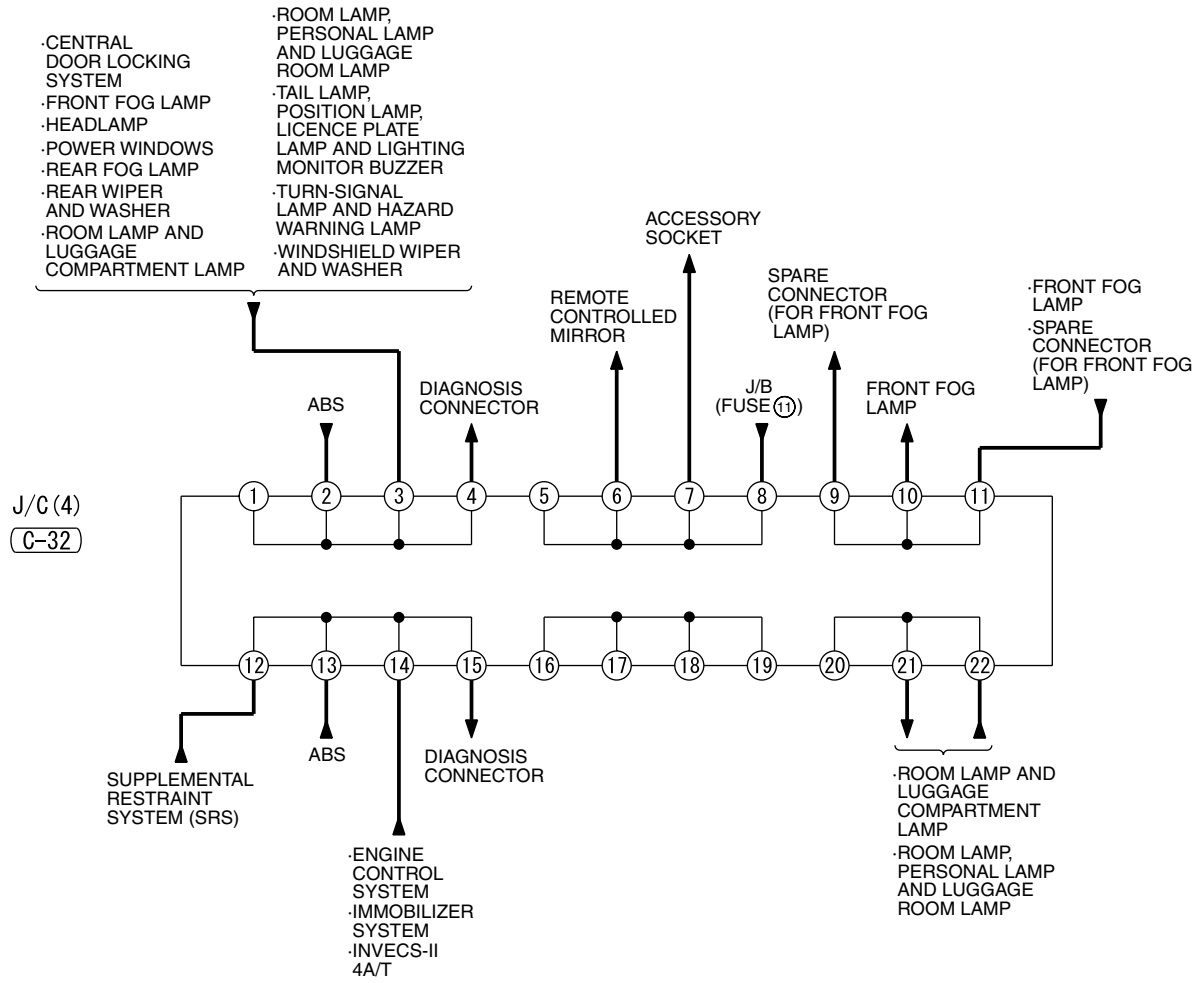
·CENTRAL DOOR LOCKING SYSTEM
·FRONT FOG LAMP
·HEADLAMP
·POWER WINDOWS
·REAR FOG LAMP
·REAR WIPER AND WASHER
·ROOM LAMP AND LUGGAGE COMPARTMENT LAMP
·ROOM LAMP, PERSONAL LAMP AND LUGGAGE ROOM LAMP
·TAIL LAMP, POSITION LAMP, LICENCE PLATE LAMP AND LIGHTING MONITOR BUZZER
·TURN-SIGNAL LAMP AND HAZARD WARNING LAMP
·WINDSHIELD WIPER AND WASHER
ACCESSORY SOCKET
REMOTE CONTROLLED MIRROR
SPARE CONNECTOR (FOR FRONT FOG LAMP)
·FRONT FOG LAMP
·SPARE CONNECTOR (FOR FRONT FOG LAMP)
ABS
DIAGNOSIS CONNECTOR
J/B (FUSE 11)
FRONT FOG LAMP
J/C (4)
C-32
1
2
3
4
5
6
7
8
9
10
11
12
13
14
15
16
17
18
19
20
21
22
SUPPLEMENTAL RESTRAINT SYSTEM (SRS)
ABS
DIAGNOSIS CONNECTOR
·ENGINE CONTROL SYSTEM
·IMMOBILIZER SYSTEM
·INVECS-II 4A/T
·ROOM LAMP AND LUGGAGE COMPARTMENT LAMP
·ROOM LAMP, PERSONAL LAMP AND LUGGAGE ROOM LAMP

H4J00E02BB

J/C <RHD> (CONTINUED)

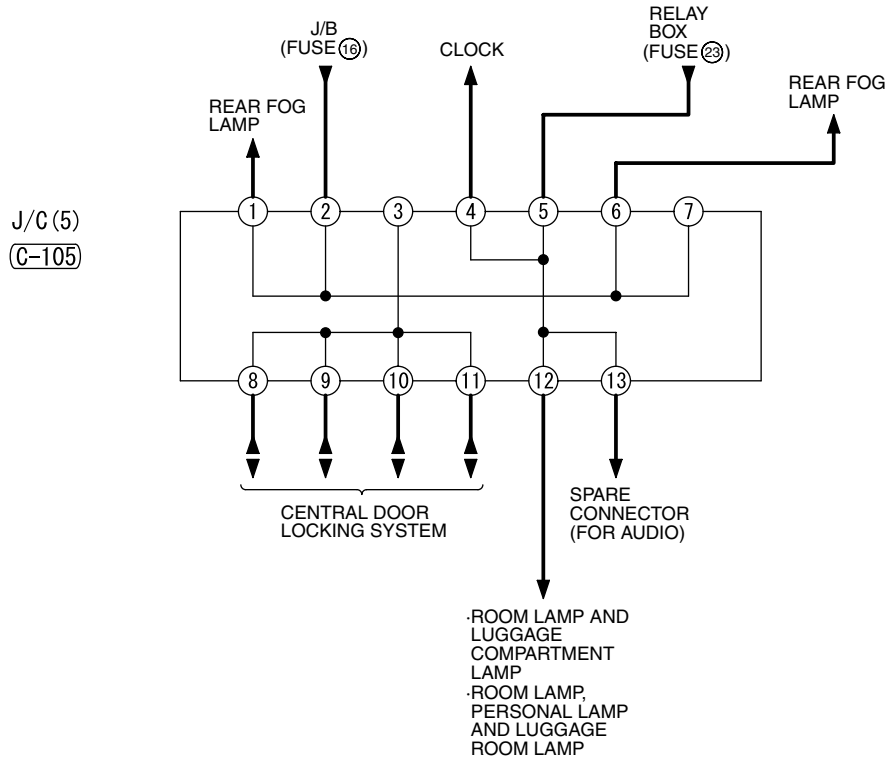

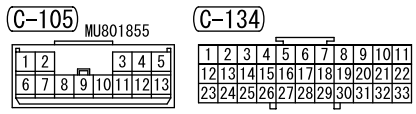

H4J00E02CA

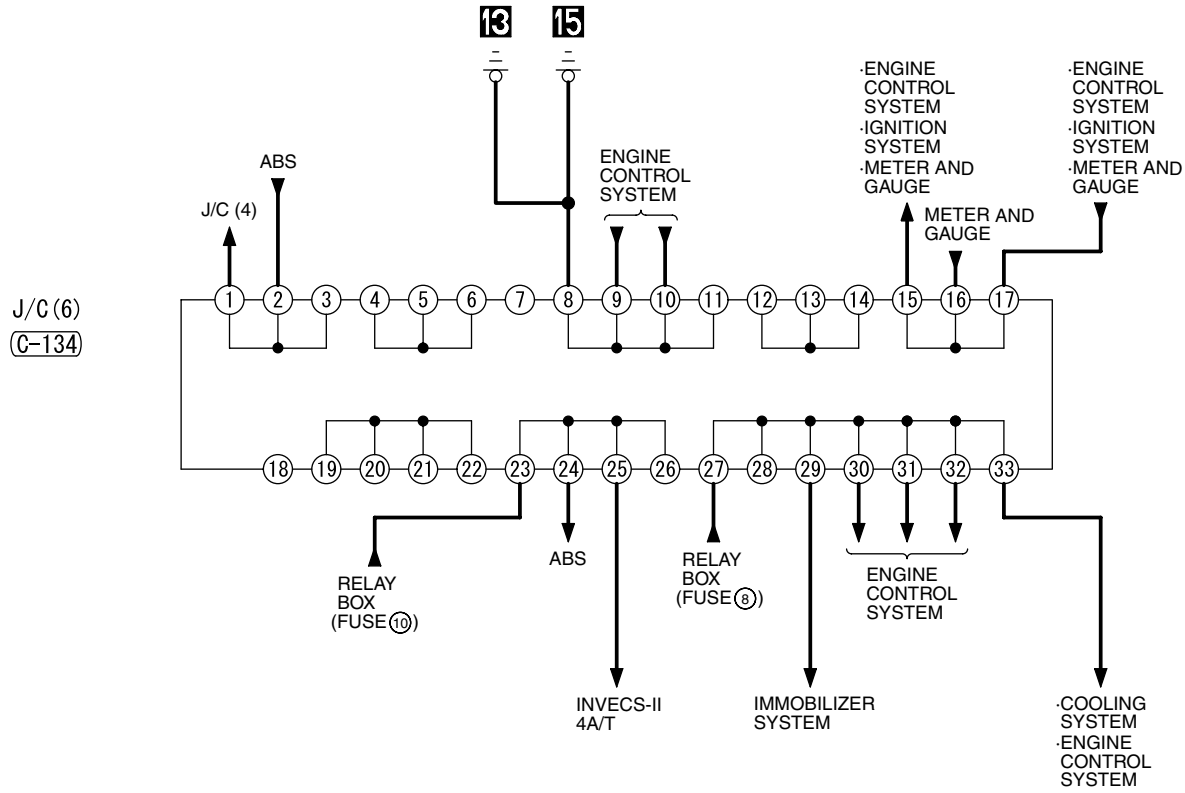
13
15
ABS
J/C (4)
ENGINE CONTROL SYSTEM
·ENGINE CONTROL SYSTEM
·IGNITION SYSTEM
·METER AND GAUGE
METER AND GAUGE
·ENGINE CONTROL SYSTEM
·IGNITION SYSTEM
·METER AND GAUGE
J/C (6)
C-134
1 2 3 4 5 6 7 8 9 10 11 12 13 14 15 16 17
18 19 20 21 22 23 24 25 26 27 28 29 30 31 32 33
RELAY BOX (FUSE 10)
ABS
RELAY BOX (FUSE 8)
ENGINE CONTROL SYSTEM
INVECS-II 4A/T
IMMOBILIZER SYSTEM
·COOLING SYSTEM
·ENGINE CONTROL SYSTEM

H4J00E02CB

CENTRALIZED JUNCTION

M1901000300667

FUSIBLE LINK AND FUSE

ENGINE COMPARTMENT

No.	Power supply circuit	Name	Rated capacity (A)	Housing colour	Load circuit
1	Battery	Fusible link	60	Yellow	Fuse No. 15, 16, 19, 20 (in junction block) circuit
2			50	Red	Fan controller
3			60	Yellow	ABS-ECU
4			40	Green	Ignition switch circuit
5			30	Pink	Power window main switch and power window sub switch
6		Fuse	15	Blue	Front fog lamp, front fog lamp indicator lamp, front fog lamp relay and spare connector (for front fog lamp)
7			10	Red	Horn relay and horn
8			20	Yellow	Air flow sensor, camshaft position sensor, crank angle sensor, EGR control solenoid valve, engine-A/T-ECU, engine-ECU, engine control relay, fan control relay, idle speed control servo, ignition coil relay, immobilizer-ECU, injector, oxygen sensor and purge control solenoid valve
9			10	Red	A/C compressor
10			15	Blue	ABS-ECU, engine-A/T-ECU, high mount stop lamp and rear combination lamp
11			15	Blue	Accessory socket
12			7.5	Brown	Alternator
13			10	Red	ETACS-ECU, front turn signal lamp, rear combination lamp, side turn signal lamp and turn signal indicator lamp
14			20	Yellow	A/T control solenoid valve assembly and engine-A/T-ECU
15			15	Blue	Fuel pump
16	Front-ECU (Headlamp relay: Hi)		10	Red	Headlamp (RH)
17			10	Red	Headlamp (LH) and high beam indicator lamp
18			10	Red	Headlamp (RH)
19			10	Red	Headlamp (LH), headlamp assembly and headlamp leveling switch

No.	Power supply circuit	Name	Rated capacity (A)	Housing colour	Load circuit
20	Front-ECU (Tail lamp relay)	Fuse	7.5	Brown	A/C-ECU, ashtray illumination lamp, cigarette lighter illumination lamp, combination meter, fog lamp switch, front turn signal lamp, hazard warning switch, headlamp assembly (RH), headlamp leveling switch, heated seat switch, heater control unit, licence plate lamp, rear combination lamp, rheostat, side turn signal lamp and spare connector (for audio)
21			7.5	Brown	Combination meter, headlamp assembly (LH), licence plate lamp, position lamp (LH) and rear combination lamp (LH)
22	Battery		10	Red	Combination meter, column switch, ETACS-ECU and front-ECU
23	Ignition switch (ACC)		10	Red	Clock, ETACS-ECU and spare connector (for audio)
24	Battery		–	–	–
25			20	Yellow	Heated seat assembly and heated seat switch
26		Fusible link	100	–	Alternator

(Relay box in engine compartment)

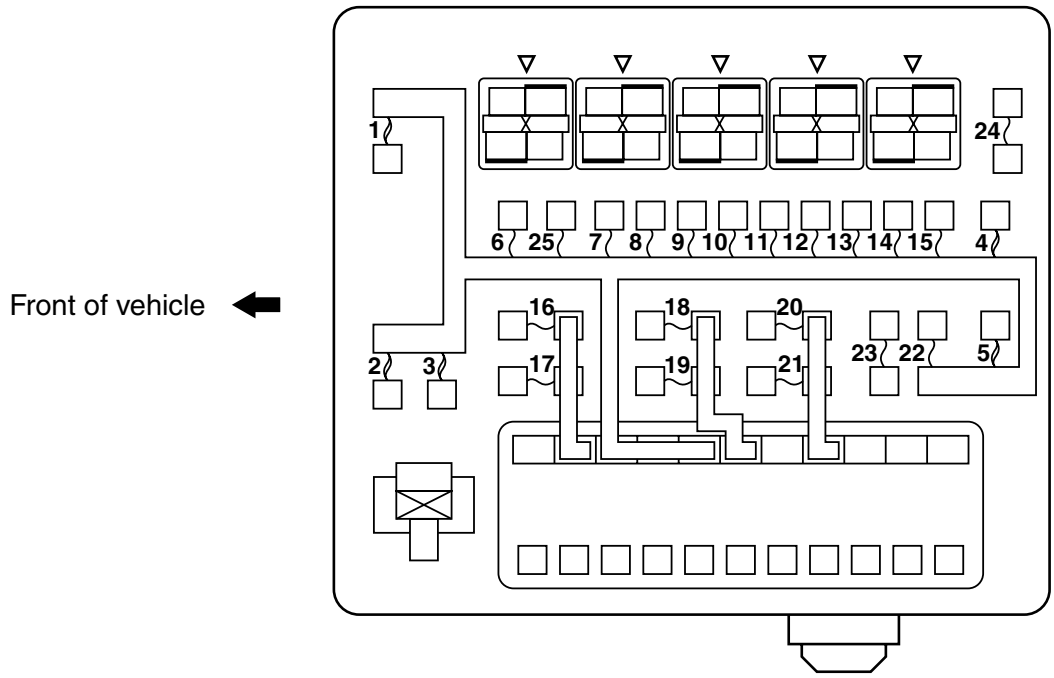

AC208462 AO

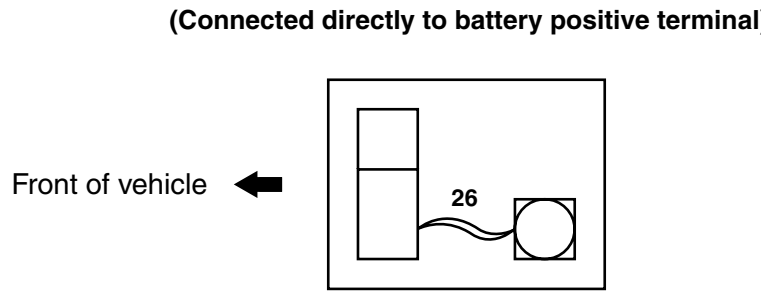

AC207745 AF

PASSENGER COMPARTMENT

No.	Power supply circuit	Name	Rated capacity (A)	Housing colour	Load circuit
1	Ignition switch (IG1)	Fuse	10	Red	Capacitor and ignition coil
2			7.5	Brown	ABS warning lamp, brake warning lamp, charging warning lamp, check engine warning lamp, column switch, combination meter, ETACS-ECU, low fuel warning lamp, oil pressure warning lamp, SRS air bag warning lamp, SRS-ECU and vehicle speed sensor
3			7.5	Brown	A/T control relay, combination meter, engine-A/T-ECU, ETACS-ECU, input shaft speed sensor, output shaft speed sensor, rear combination lamp and SRS-ECU
4			–	–	–
5	Ignition switch (IG2)		7.5	Brown	A/C compressor relay, A/C-ECU, blower relay, defogger relay, front-ECU, heated seat relay, heater control unit and outside/inside air selection damper control motor
6	Defogger relay		7.5	Brown	Remote controlled mirror
7	Ignition switch (ACC)		20	Yellow	Front-ECU and windshield wiper motor
8	Ignition switch (IG1)		7.5	Brown	Engine-A/T-ECU, engine-ECU, fuel pump relay (1) and fuel pump relay (2)
9	Ignition switch (ACC)		15	Blue	Cigarette lighter
10			–	–	–
11			7.5	Brown	Accessory socket relay and Remote controlled mirror
12	Ignition switch (IG2)		7.5	Brown	ABS-ECU
13	Ignition switch (ACC)		–	–	–
14			15	Blue	ETACS-ECU and rear wiper motor
15	Fusible link No.1	Fuse	15	Blue	Diagnosis connector

No.	Power supply circuit	Name	Rated capacity (A)	Housing colour	Load circuit
16			10	Red	Rear fog lamp, rear fog lamp indicator lamp and rear fog lamp relay
17			–	–	–
18			–	–	–
19			30	Green	A/C-ECU, blower motor, heater control unit and resistor
20			30	Green	Defogger

(in junction block)

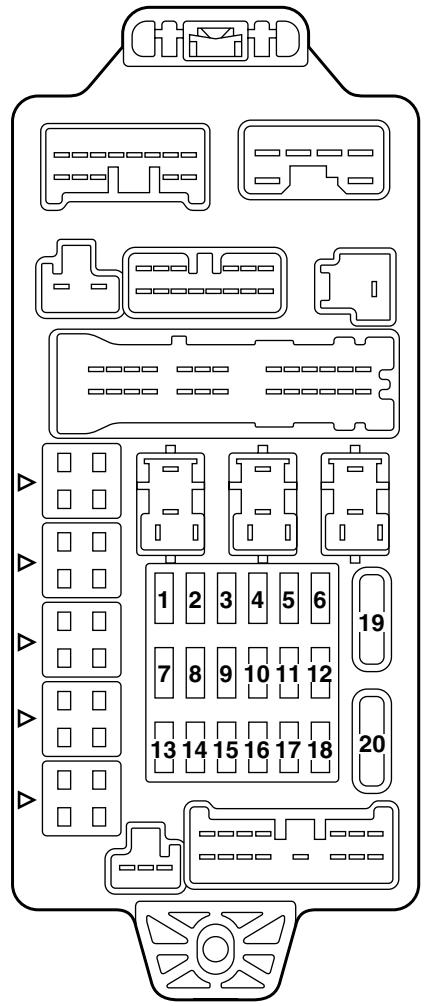

AC209082 AE

CENTRALIZED RELAY

Connector No.	Name	Connector No.	Name
A-04X	Front fog lamp relay	B-10X	Engine speed detection connector
A-05X	Horn relay	B-11X	–
A-06X	–	B-12X	–
A-07X	–	B-13X	–
A-08X	–	B-14X	Ignition coil relay
A-09X	Fan control relay	B-15X	A/T control relay
A-10X	Front-ECU	B-16X	Engine control relay
A-11X	Front-ECU	B-17X	A/C compressor relay

(Relay box in engine compartment)

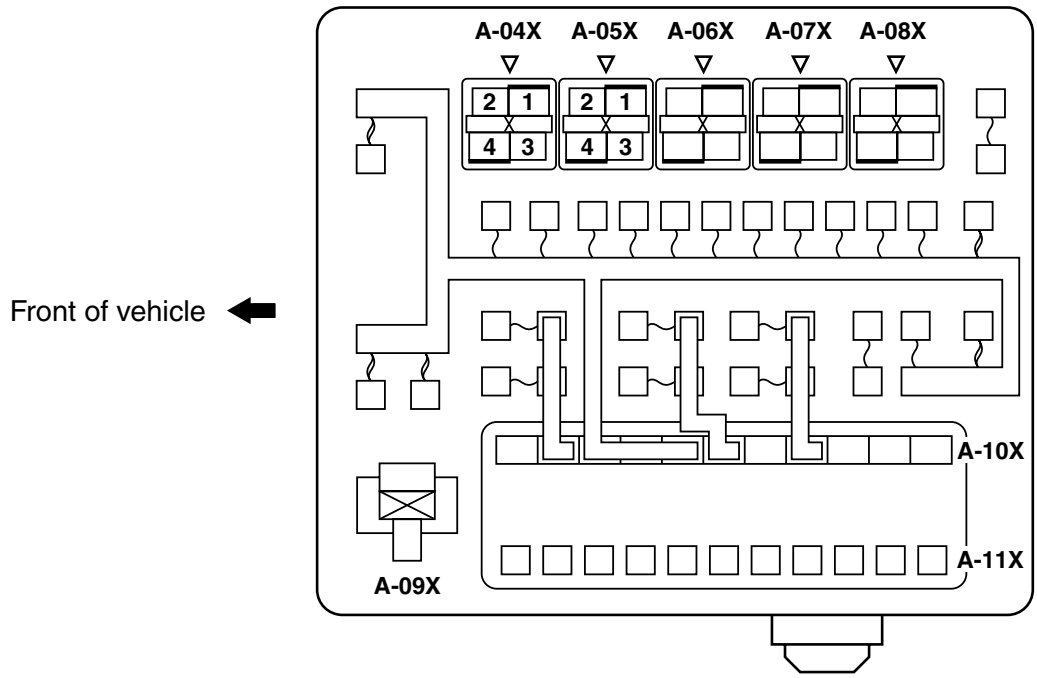

AC208462 AP

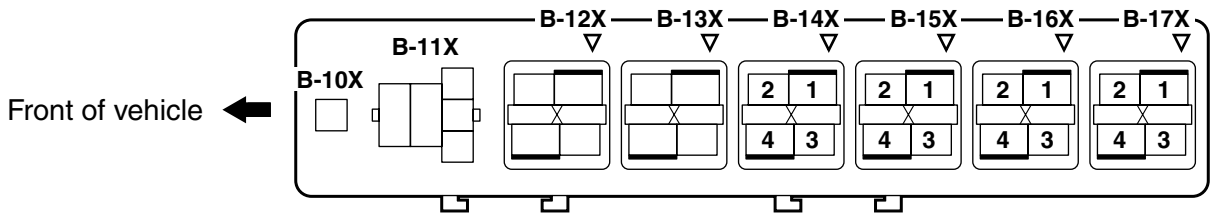

AC208464 AJ

NOTE:

- *The triangle mark on the relay housing should face that on the J/B and the relay box.*

NOTES

POWER DISTRIBUTION SYSTEM <LHD>

M1901000400675

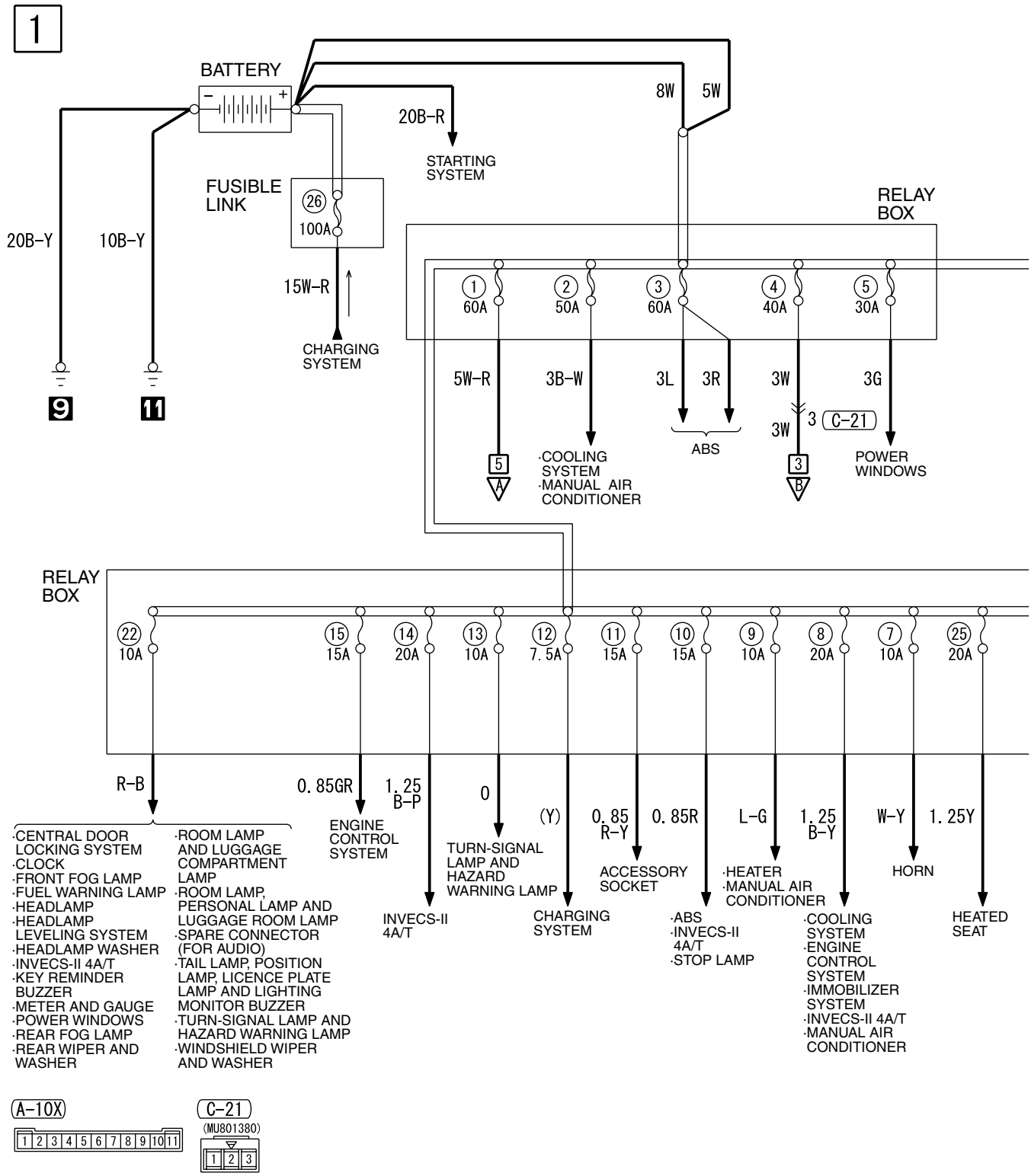

H4J01E00AA

2

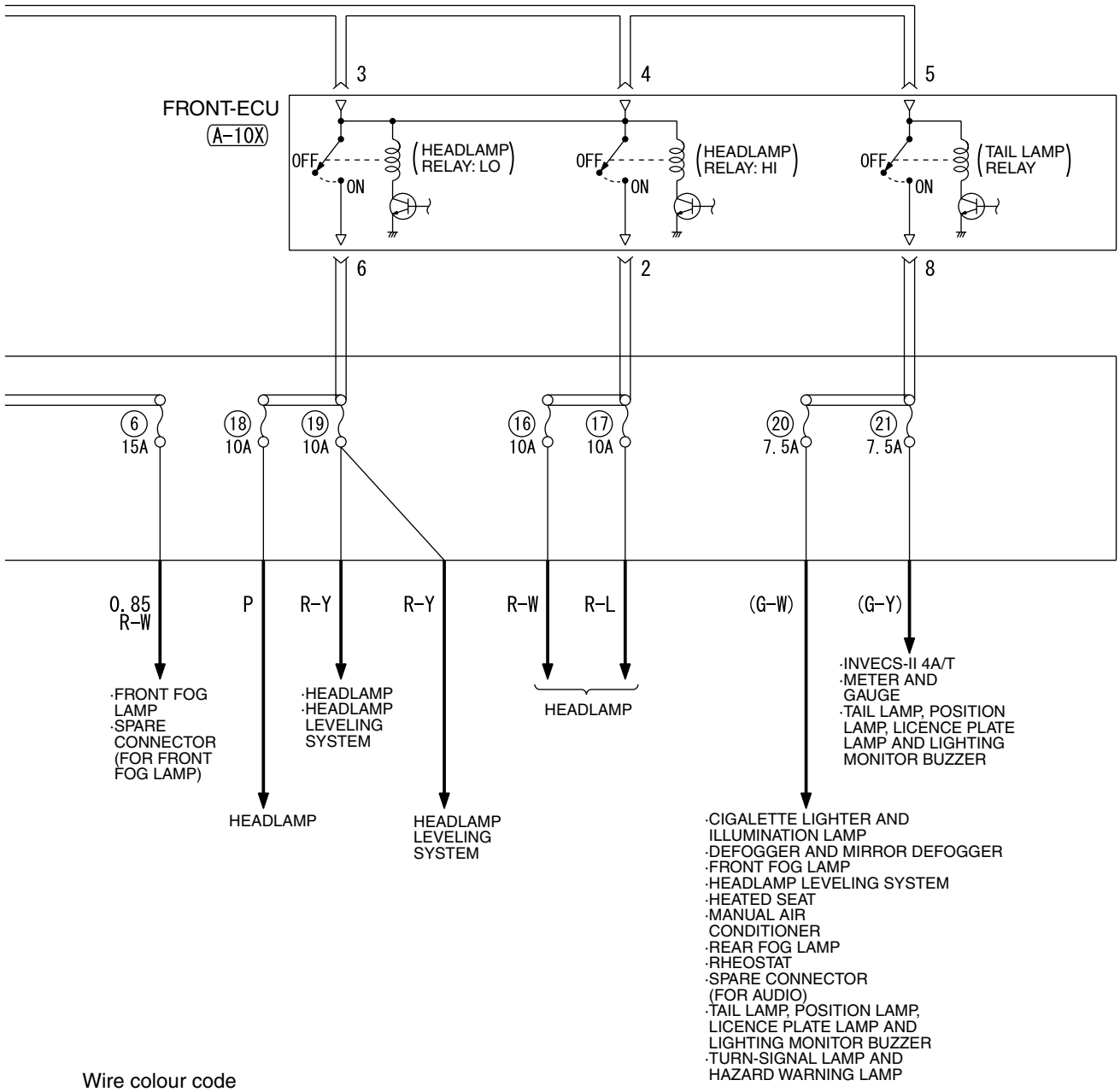

Wire colour code
B : Black LG : Light green G : Green L : Blue W : White Y : Yellow SB : Sky blue
BR : Brown O : Orange GR : Gray R : Red P : Pink V : Violet

H4J01E00AB

POWER DISTRIBUTION SYSTEM <LHD> (CONTINUED)

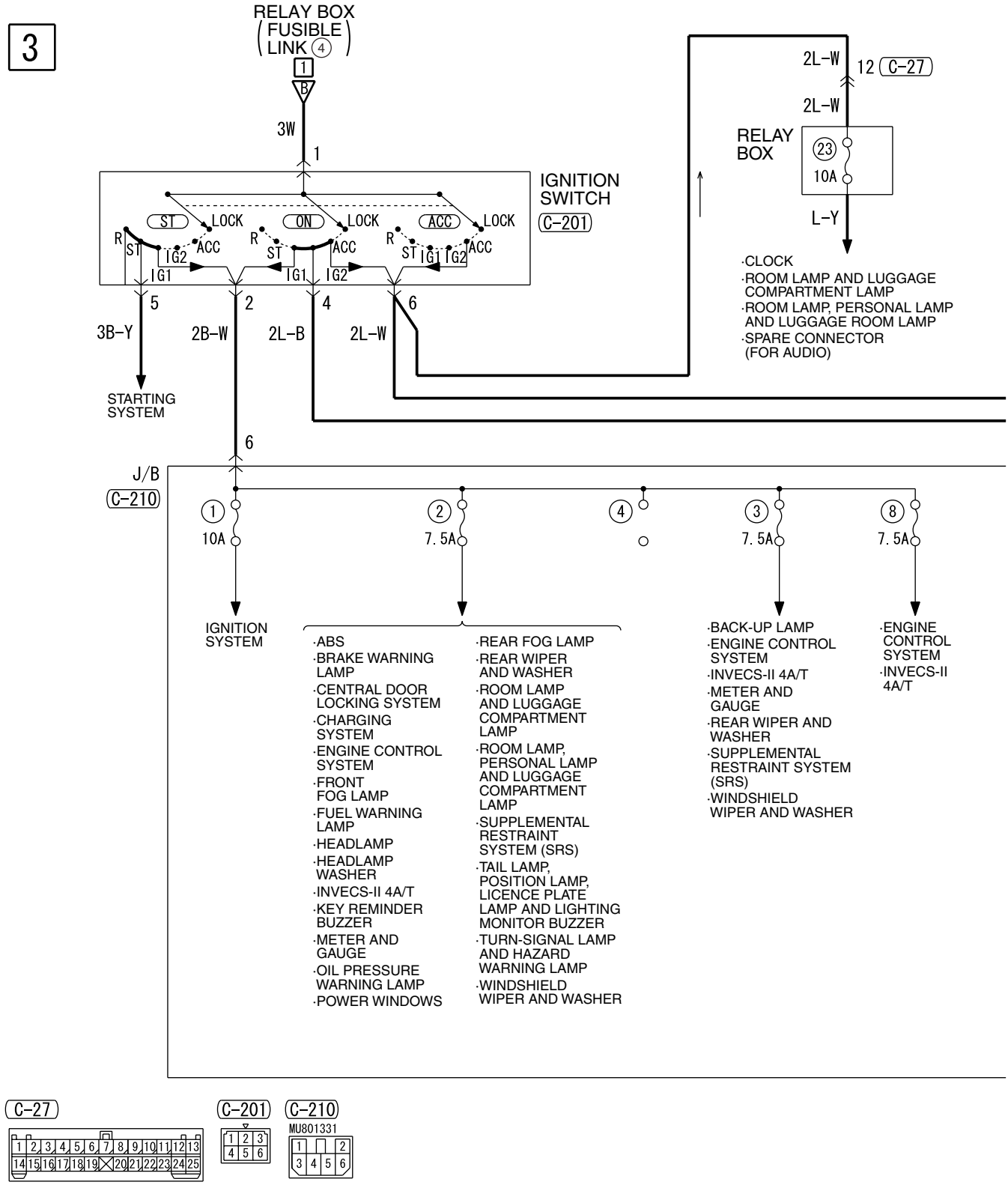

H4J01E00BA

4

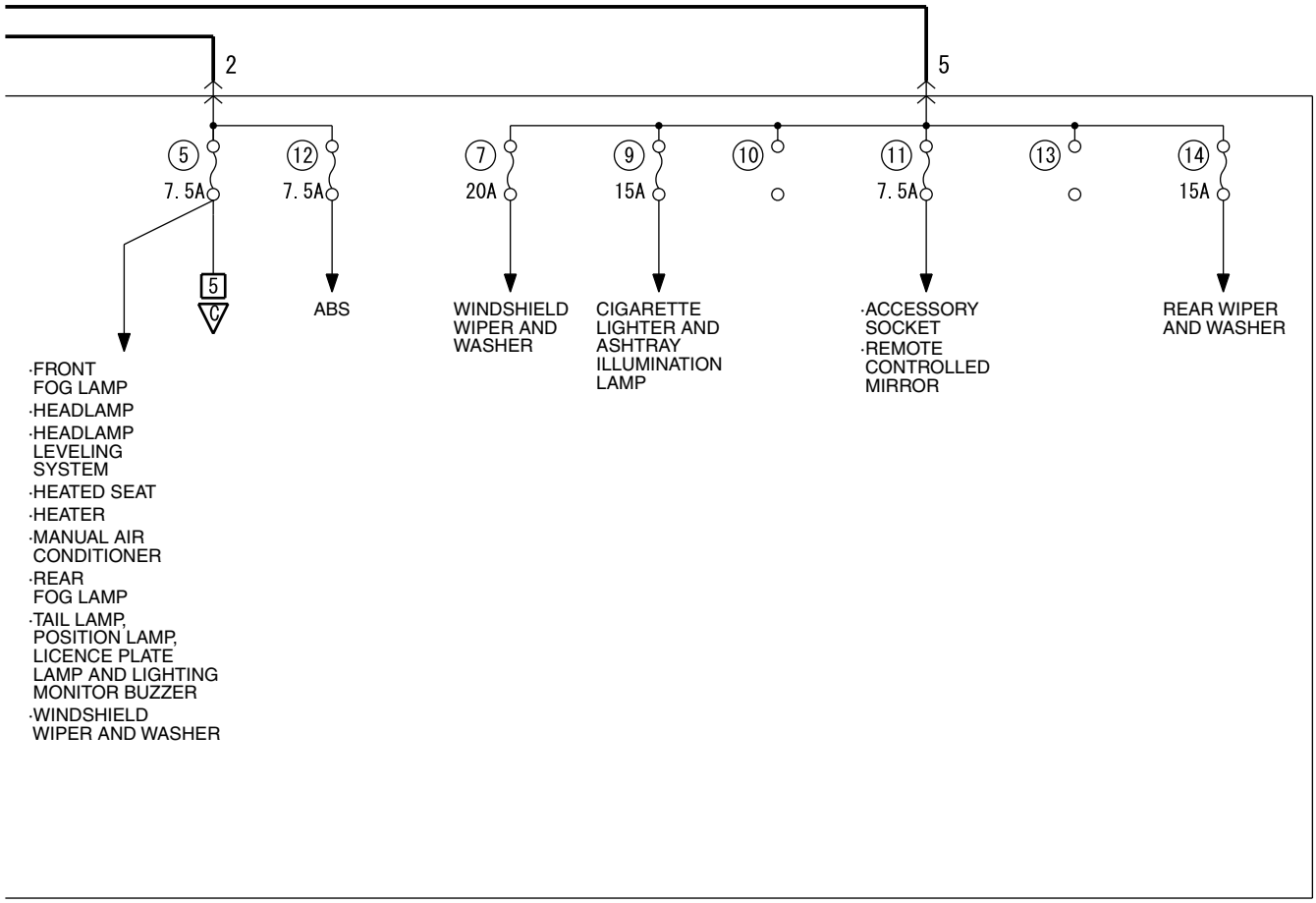

Wire colour code
B : Black LG : Light green G : Green L : Blue W : White Y : Yellow SB : Sky blue
BR : Brown O : Orange GR : Gray R : Red P : Pink V : Violet

H4J01E00BB

POWER DISTRIBUTION SYSTEM <LHD> (CONTINUED)

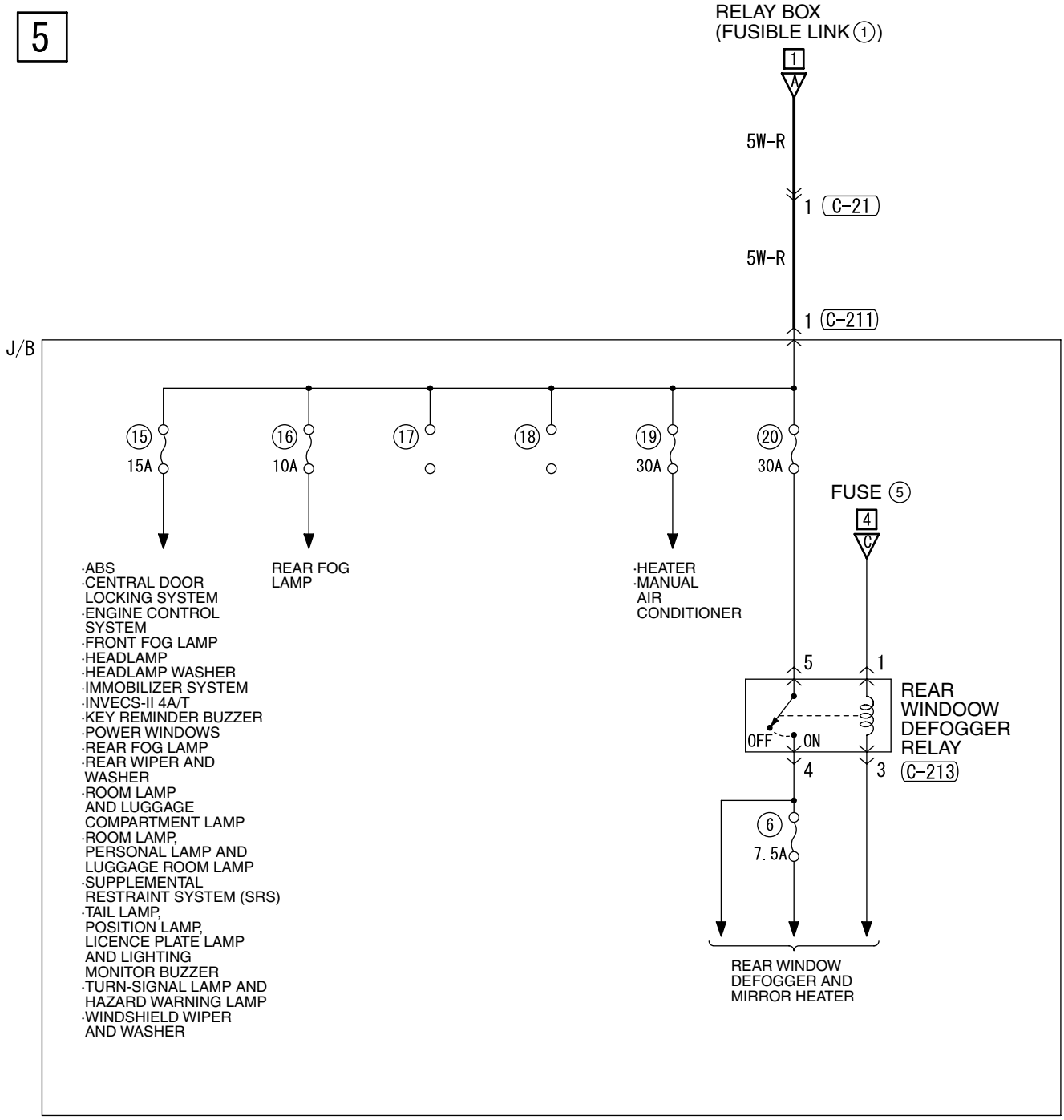

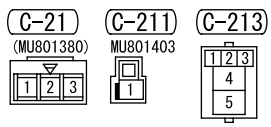

Wire colour code
B : Black LG : Light green G : Green L : Blue W : White Y : Yellow SB : Sky blue
BR : Brown O : Orange GR : Gray R : Red P : Pink V : Violet

H4J01E00CA

NOTES

POWER DISTRIBUTION SYSTEM <RHD>

M1901000400686

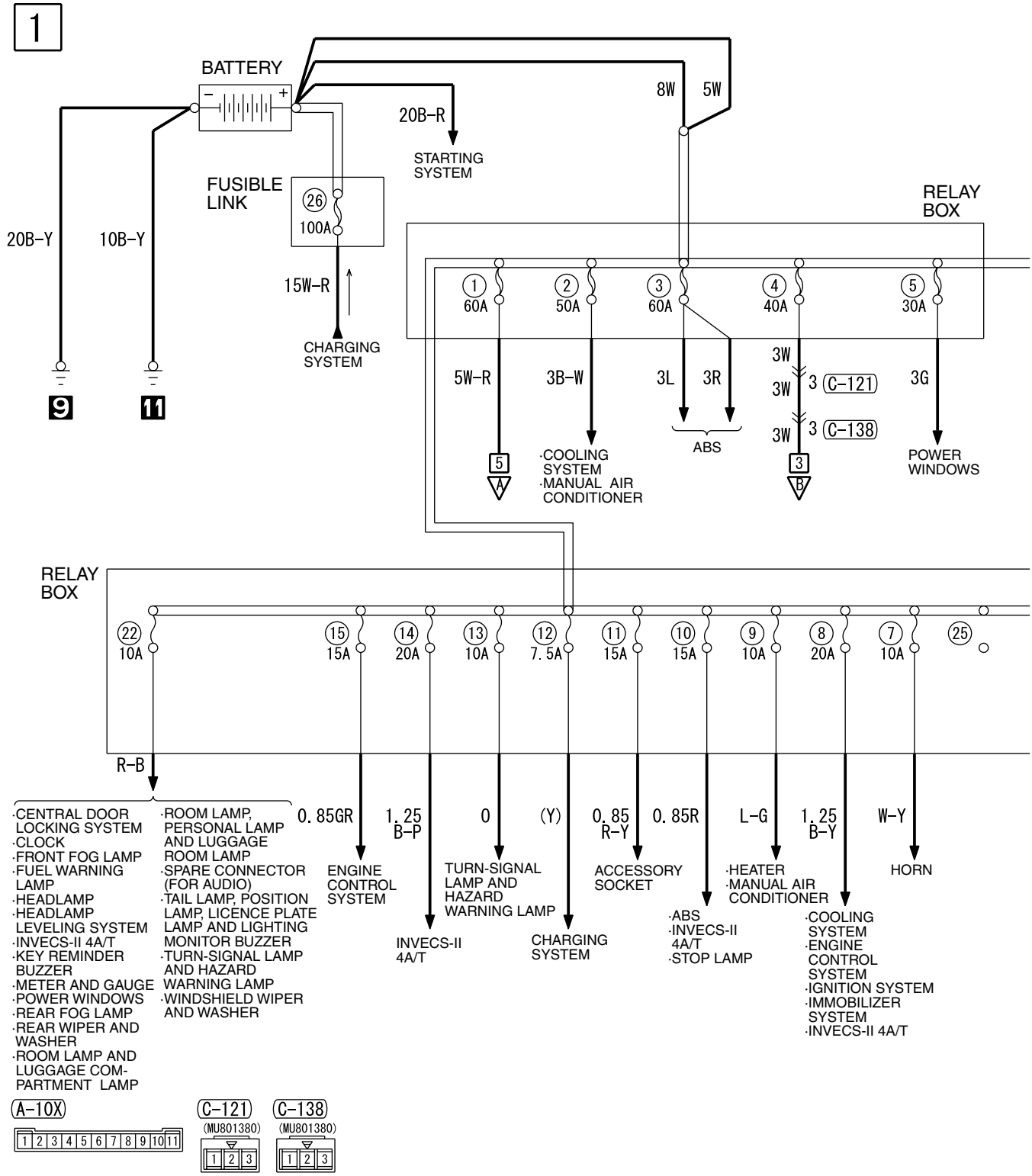

H4J01E01AA

2

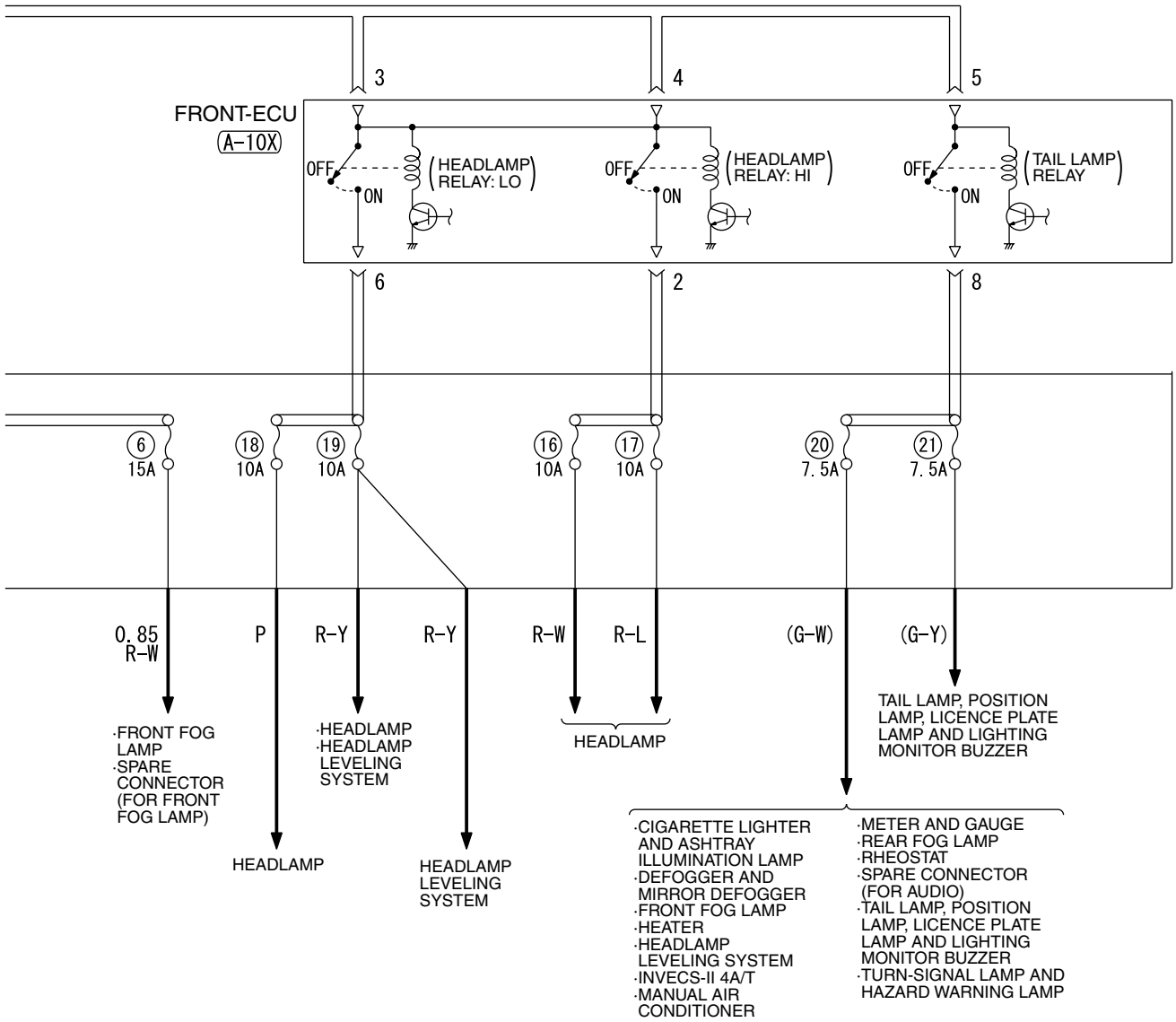

Wire colour code
B : Black LG : Light green G : Green L : Blue W : White Y : Yellow SB : Sky blue
BR : Brown O : Orange GR : Gray R : Red P : Pink V : Violet

H4J01E01AB

POWER DISTRIBUTION SYSTEM <RHD> (CONTINUED)

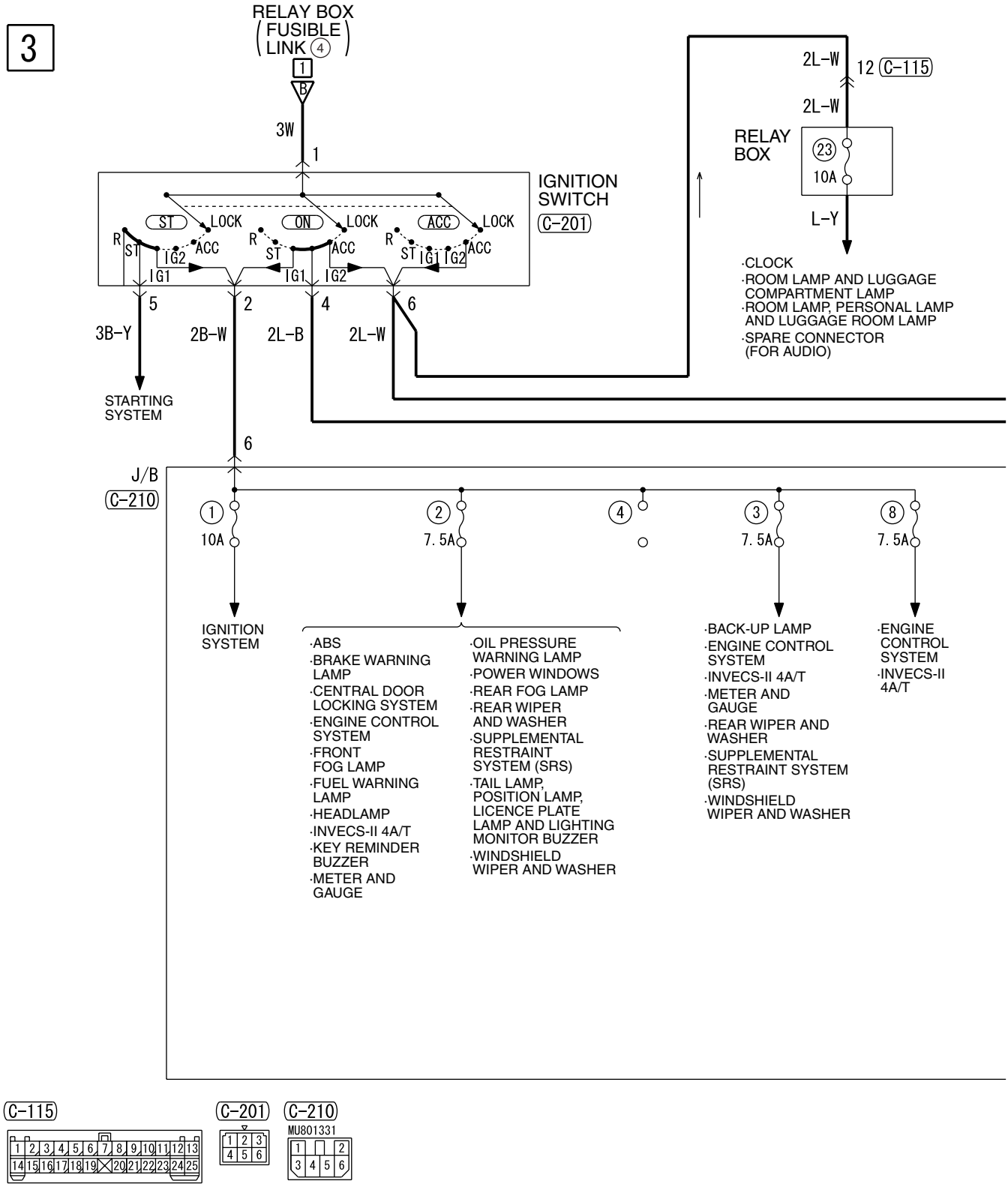

H4J01E01BA

4

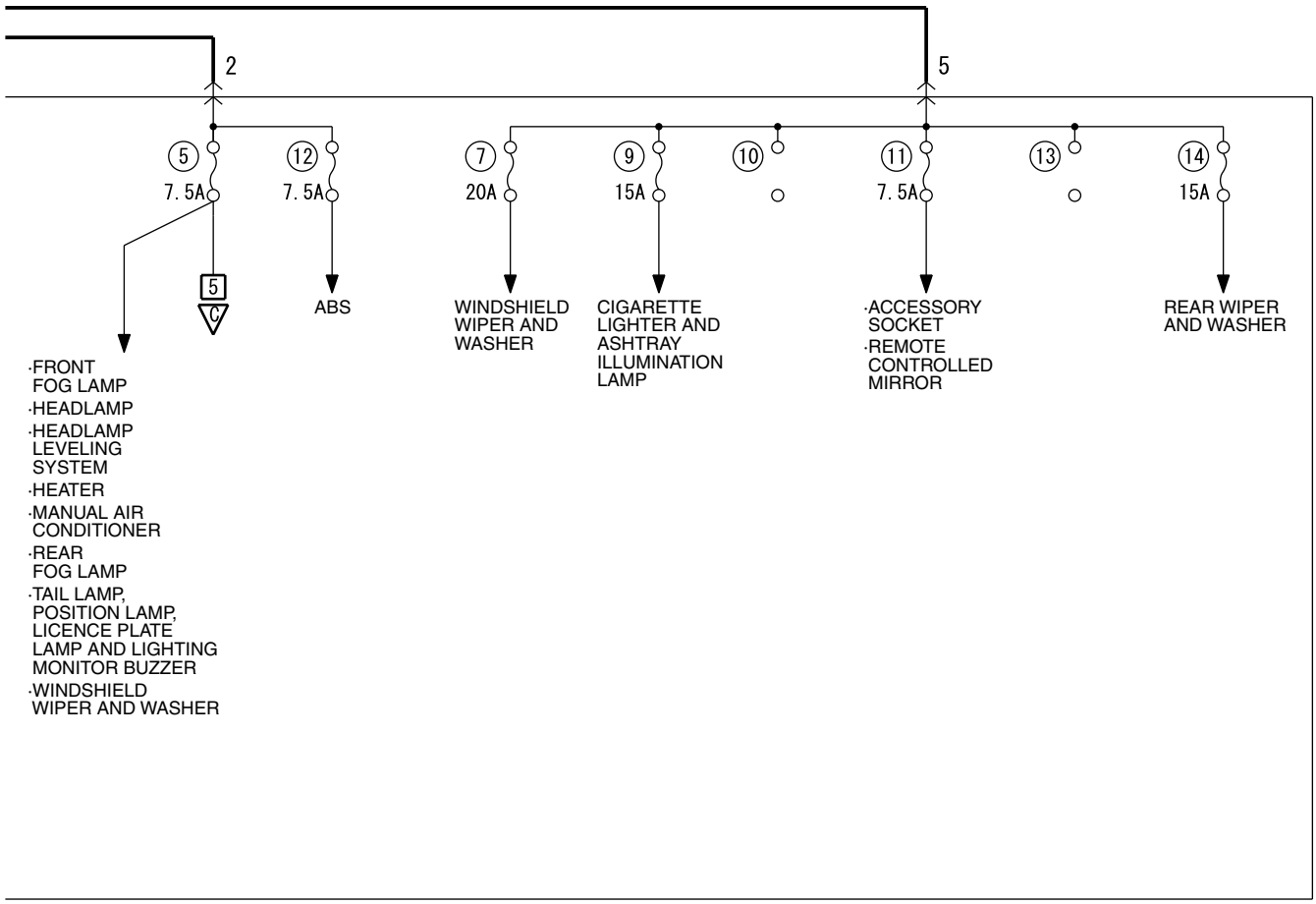

Wire colour code
B : Black LG : Light green G : Green L : Blue W : White Y : Yellow SB : Sky blue
BR : Brown O : Orange GR : Gray R : Red P : Pink V : Violet

H4J01E01BB

POWER DISTRIBUTION SYSTEM <RHD> (CONTINUED)

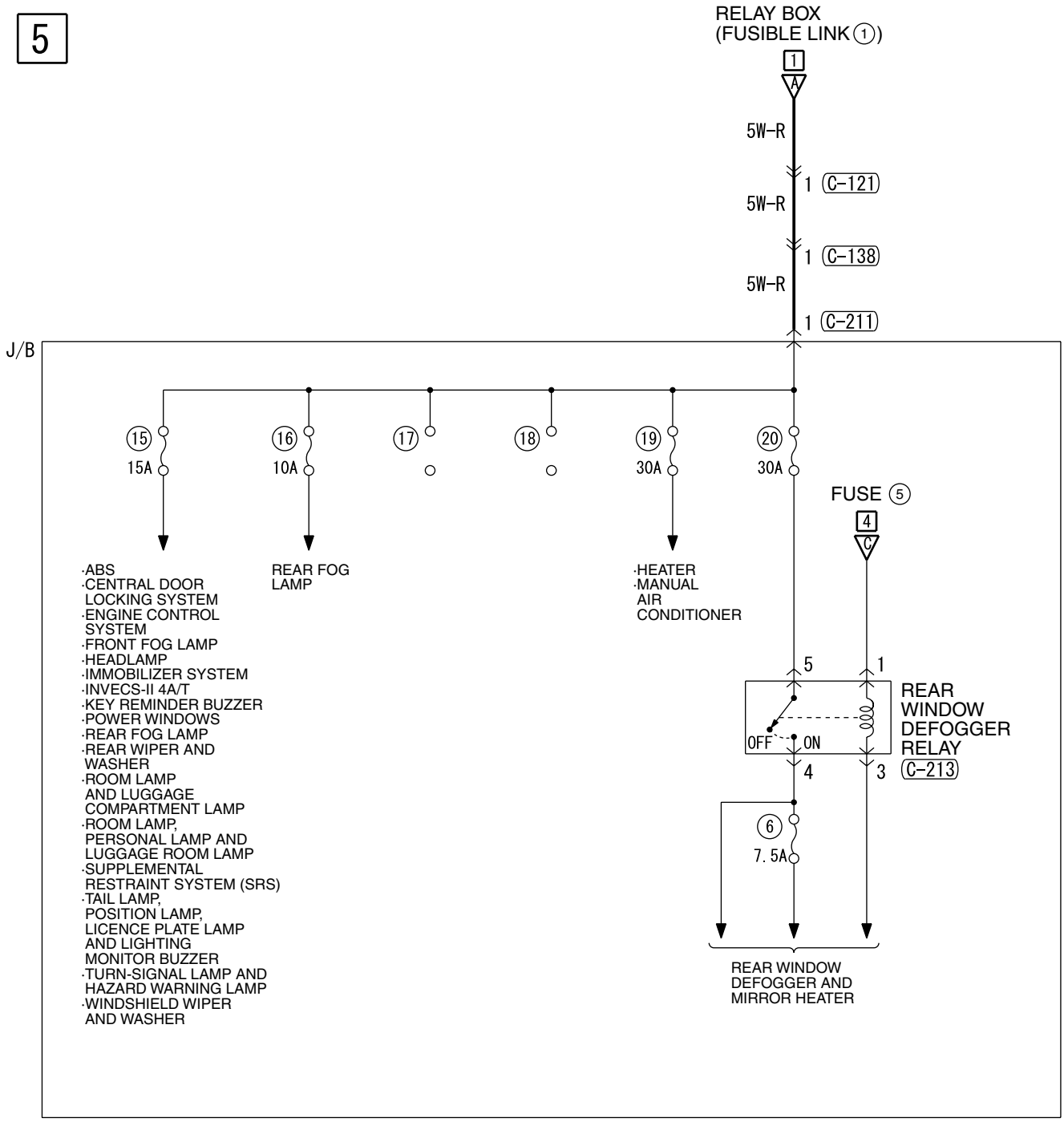

Wire colour code
B : Black LG : Light green G : Green L : Blue W : White Y : Yellow SB : Sky blue
BR : Brown O : Orange GR : Gray R : Red P : Pink V : Violet

H4J01E01CA

NOTES

STARTING SYSTEM <M/T>

M1901000500876

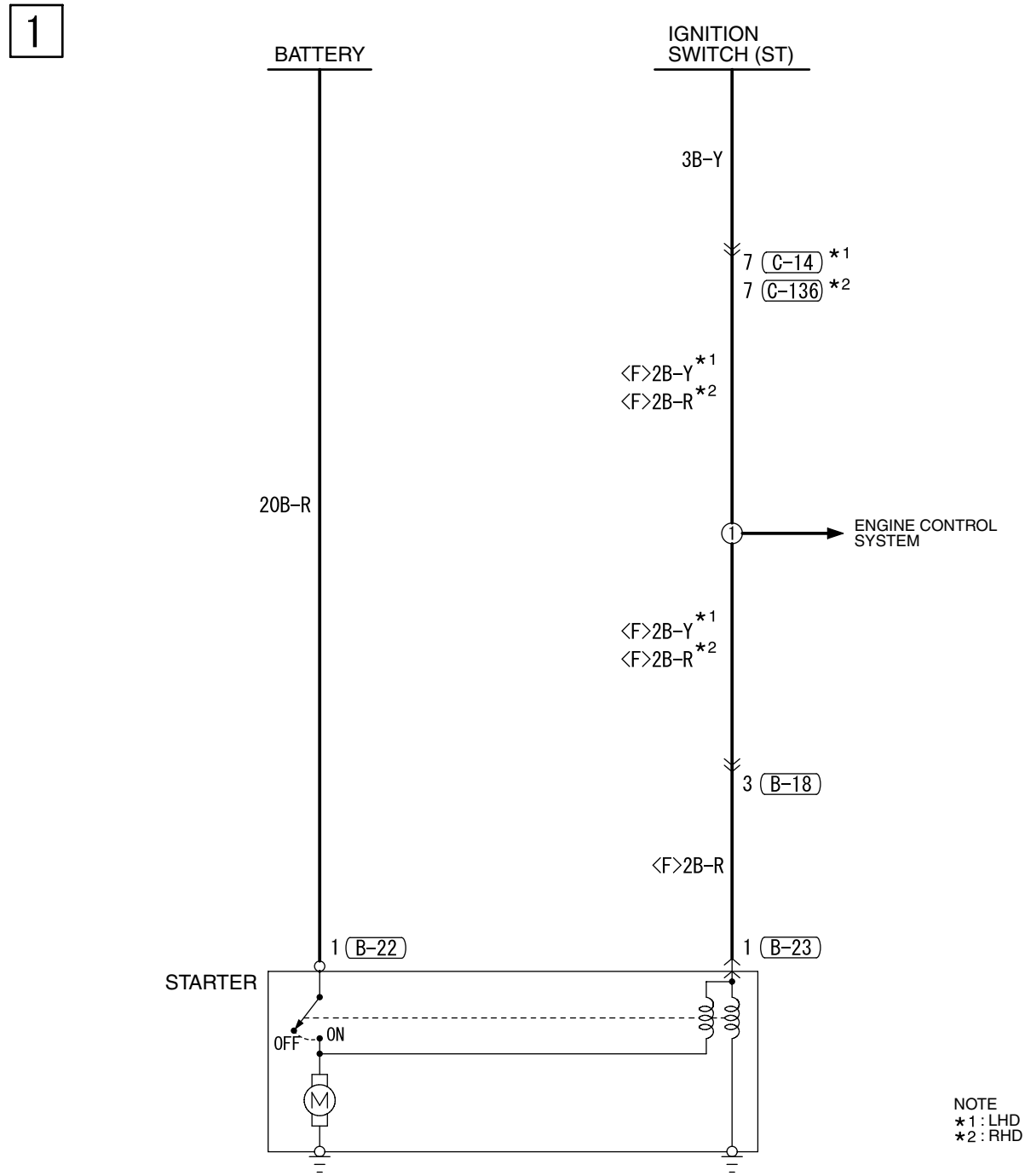

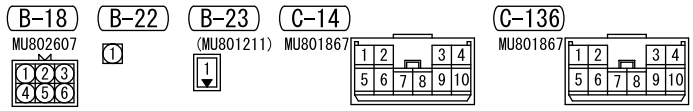

Wire colour code
B : Black LG : Light green G : Green L : Blue W : White Y : Yellow SB : Sky blue
BR : Brown O : Orange GR : Gray R : Red P : Pink V : Violet

H4J02E00AA

STARTING SYSTEM <A/T>

M1901000500887

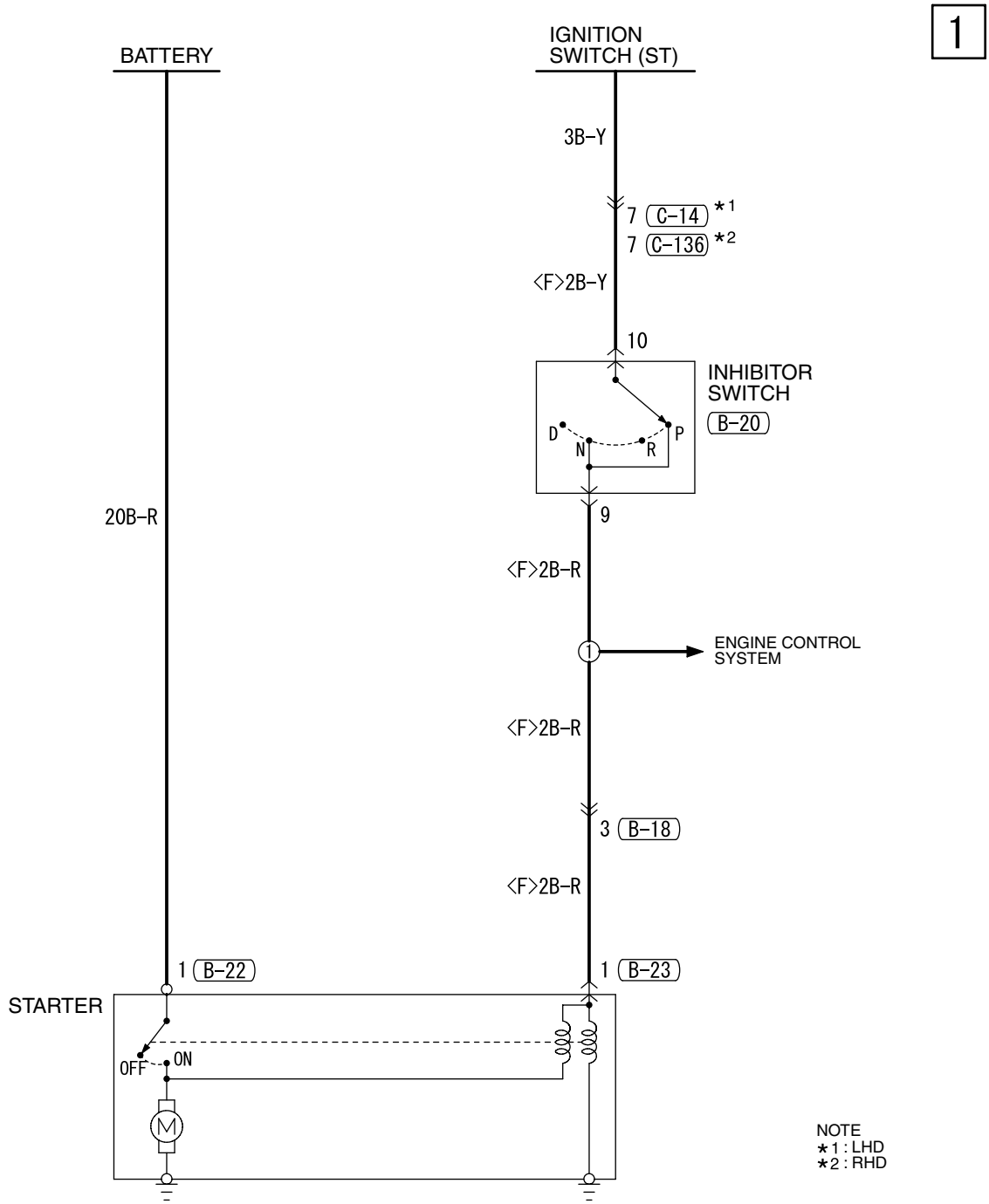

NOTE
*1 : LHD
*2 : RHD

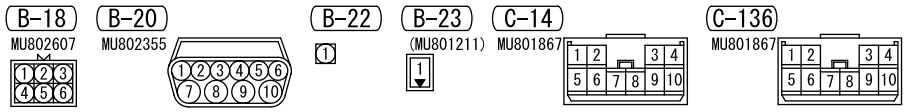

Wire colour code
B : Black LG : Light green G : Green L : Blue W : White Y : Yellow SB : Sky blue
BR : Brown O : Orange GR : Gray R : Red P : Pink V : Violet

H4J02E01AA

IGNITION SYSTEM <4G1-M/T (LHD)>

M1901000601218

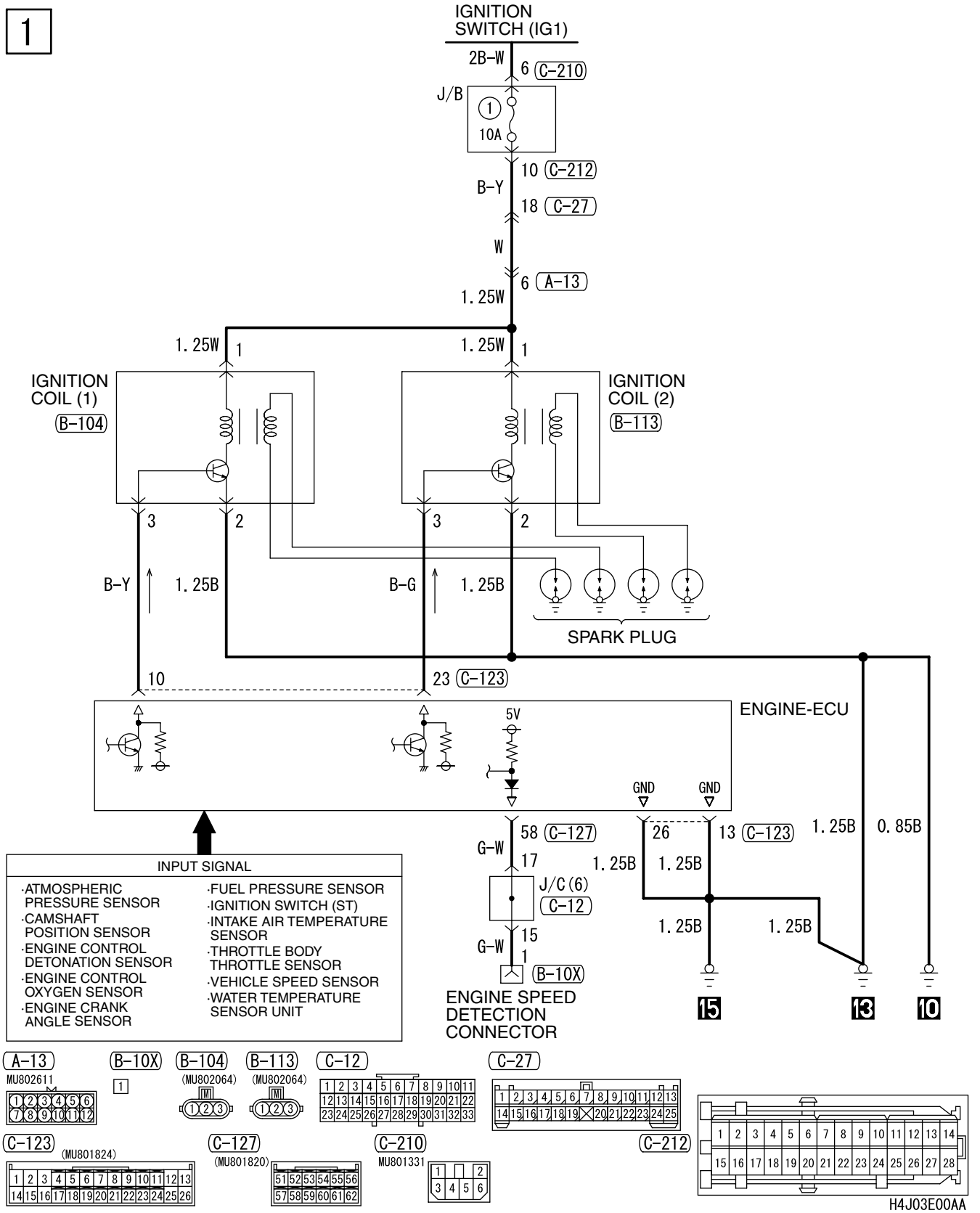

IGNITION SYSTEM <4G1-M/T (RHD)>

M1901000601229

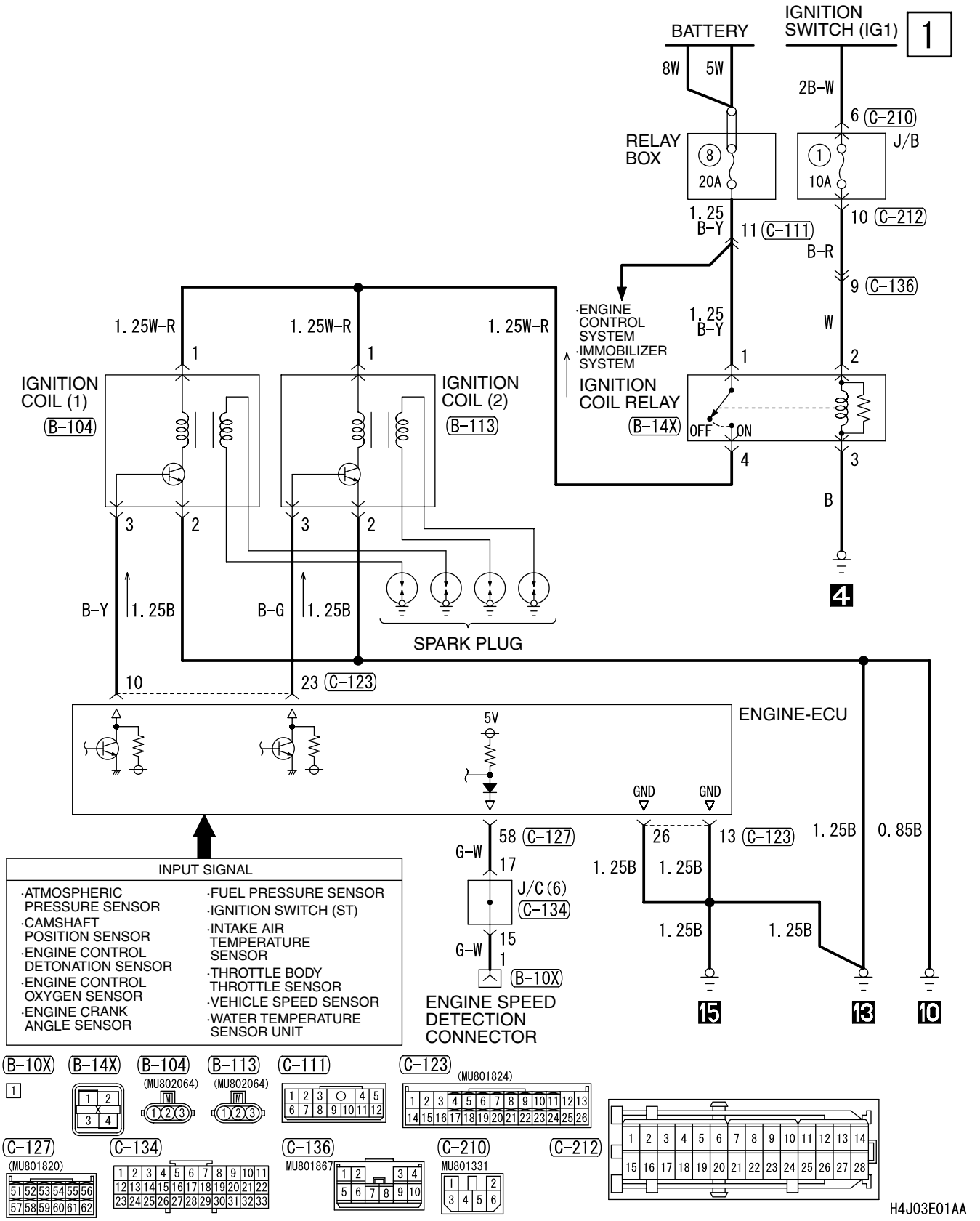

IGNITION SYSTEM <4G1-A/T (LHD)>

M1901000601230

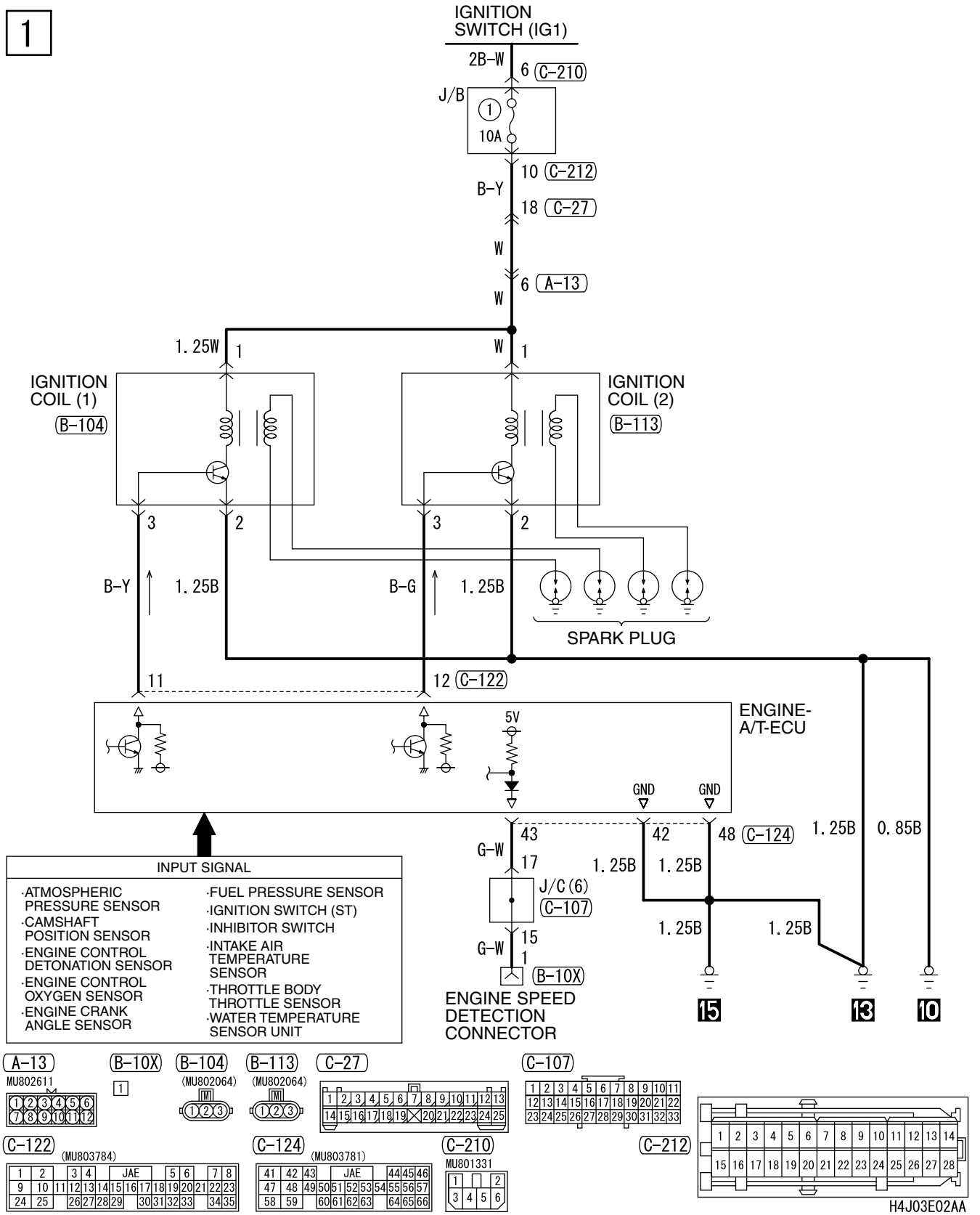

IGNITION SYSTEM <4G1-A/T (RHD)>

M1901000601241

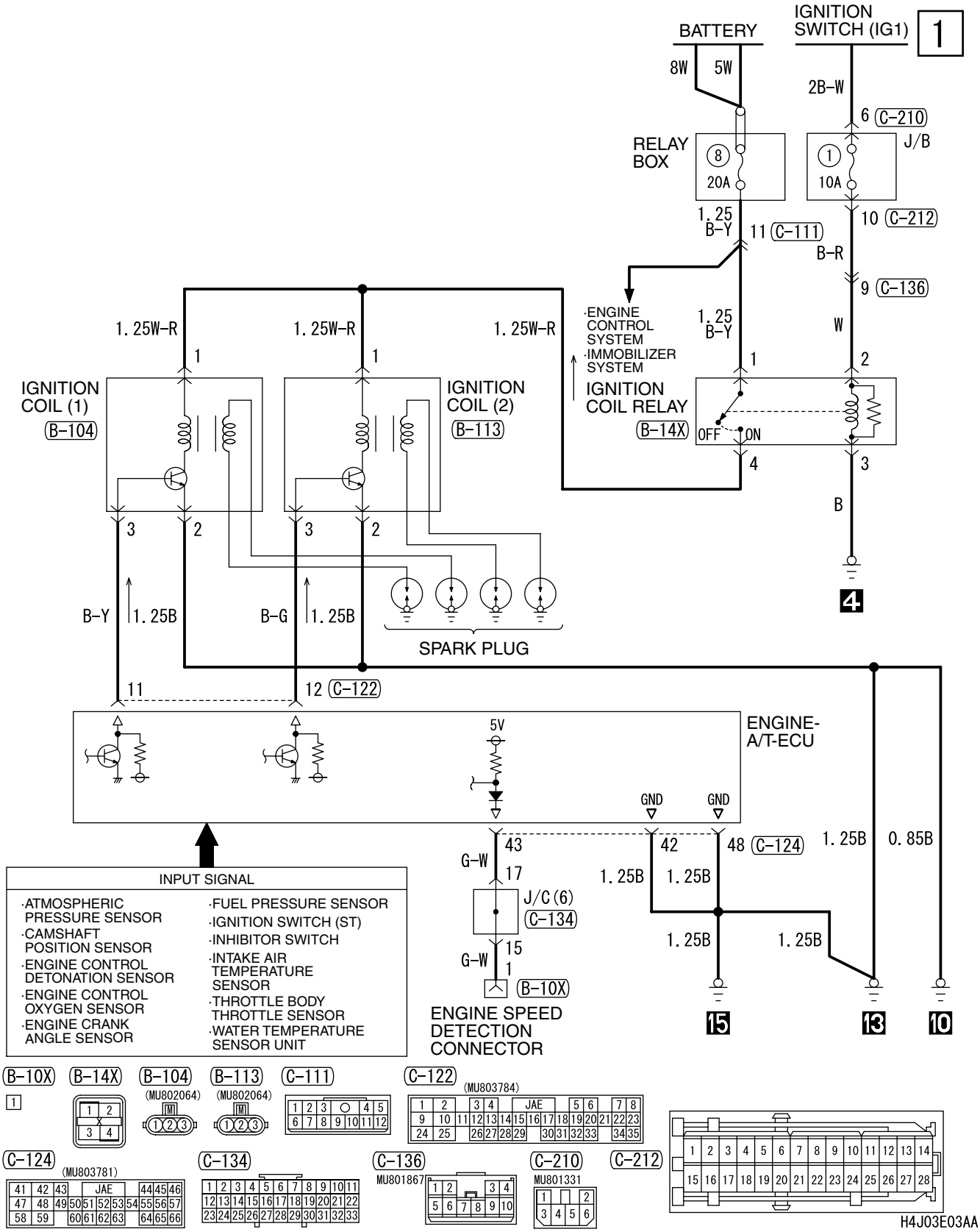

IGNITION SYSTEM <4G6 (LHD)>

M1901000601263

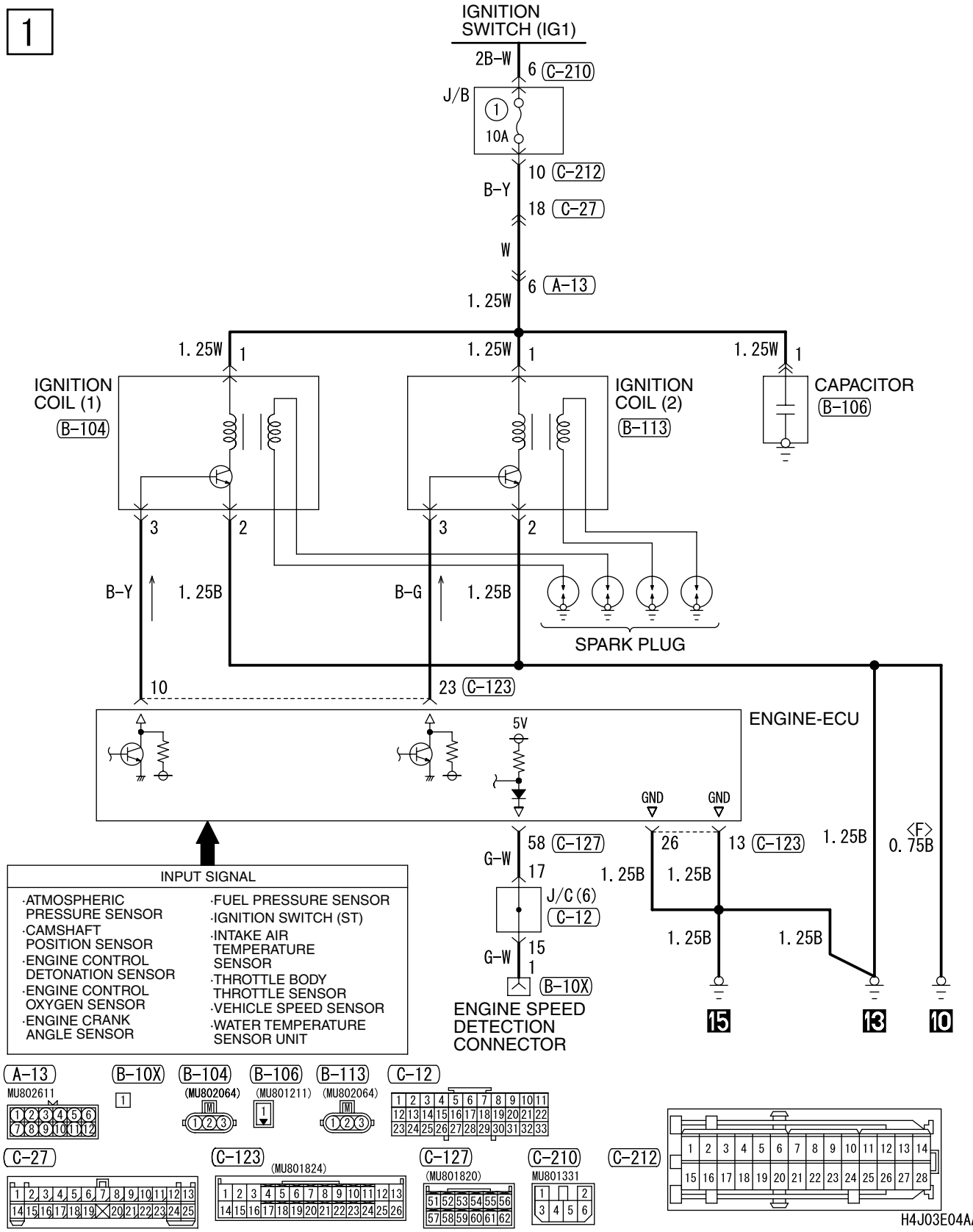

IGNITION SYSTEM <4G6 (RHD)>

M1901000601252

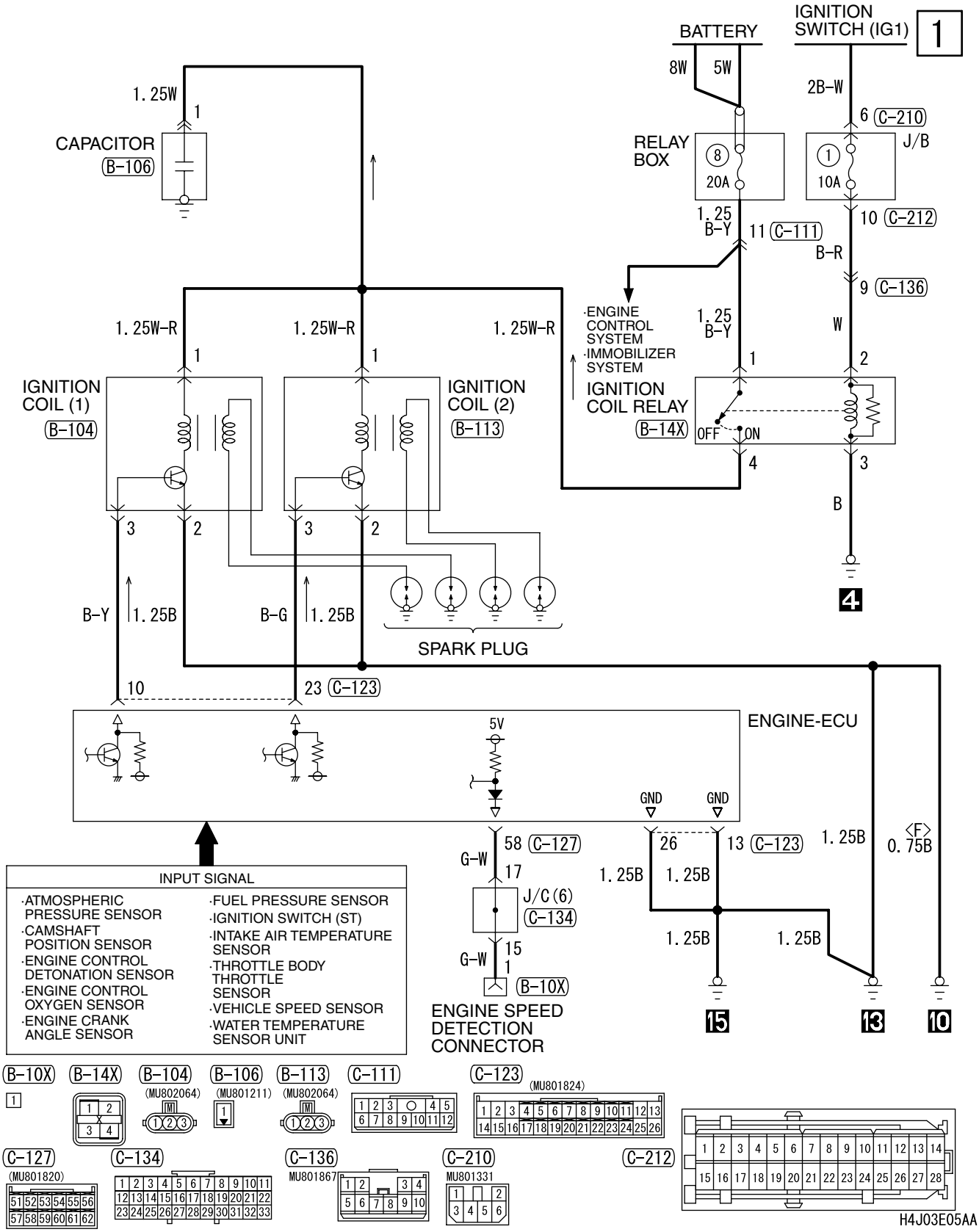

CHARGING SYSTEM <M/T>

M1901000700762

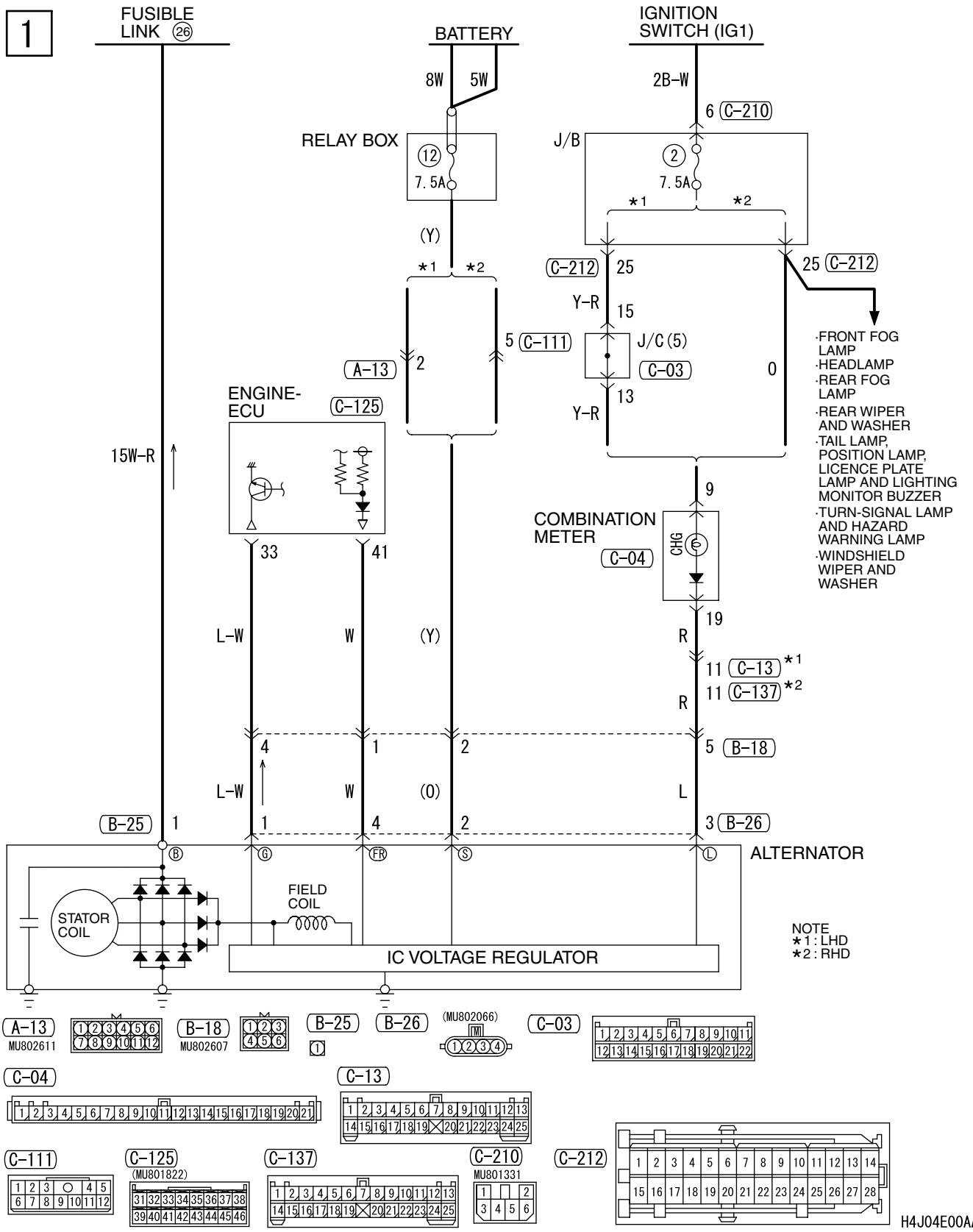

CHARGING SYSTEM <A/T>

M1901000700773

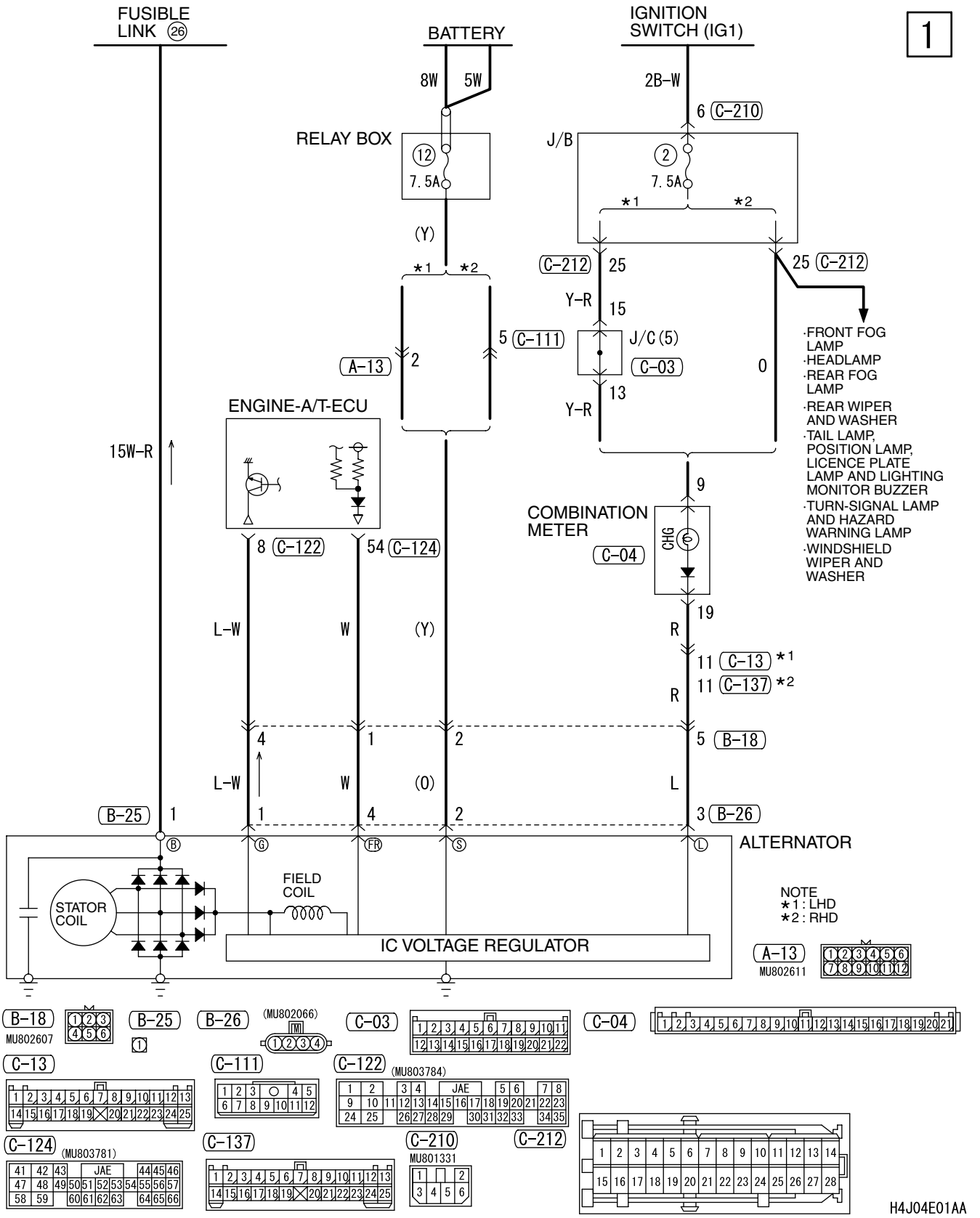

ENGINE CONTROL SYSTEM <4G1-M/T (LHD)>

M1901000801427

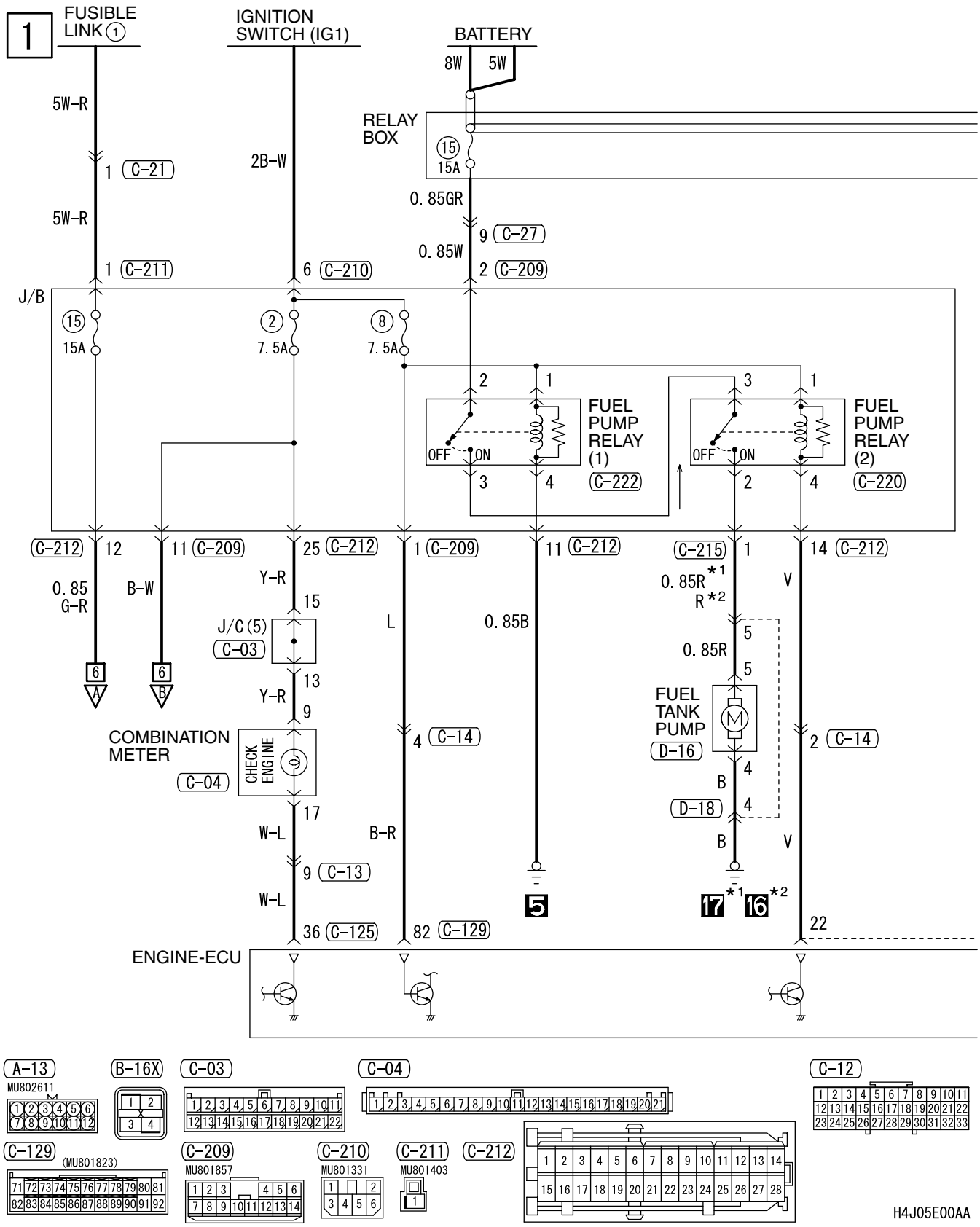

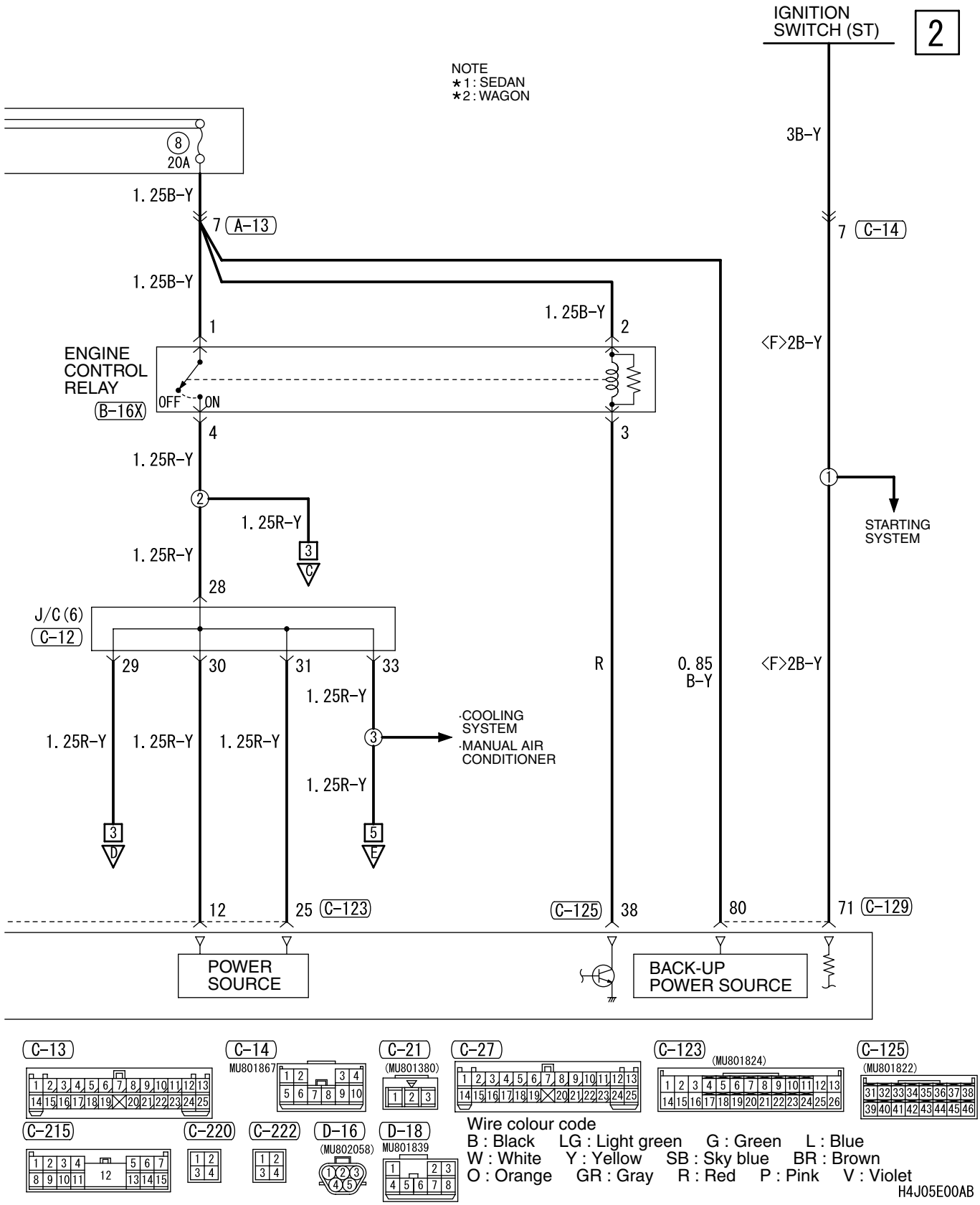
IGNITION SWITCH (ST)
2
NOTE
*1: SEDAN
*2: WAGON
8
20A
1.25B-Y
7 A-13
3B-Y
7 C-14
1.25B-Y
1
1.25B-Y
2
<F>2B-Y
ENGINE CONTROL RELAY
B-16X
OFF
ON
4
3
1.25R-Y
2
1.25R-Y
3
C
1
STARTING SYSTEM
1.25R-Y
28
J/C (6)
C-12
29
30
31
33
R
0.85 B-Y
<F>2B-Y
1.25R-Y
1.25R-Y
1.25R-Y
1.25R-Y
3
·COOLING SYSTEM
·MANUAL AIR CONDITIONER
1.25R-Y
3
D
5
E
12
25 C-123
C-125
38
80
71 C-129
POWER SOURCE
BACK-UP POWER SOURCE
C-13
C-14
MU801867
C-21
(MU801380)
C-27
C-123
(MU801824)
C-125
(MU801822)
C-215
C-220
C-222
D-16
(MU802058)
D-18
MU801839
Wire colour code
B : Black LG : Light green G : Green L : Blue
W : White Y : Yellow SB : Sky blue BR : Brown
O : Orange GR : Gray R : Red P : Pink V : Violet
H4J05E00AB

ENGINE CONTROL SYSTEM <4G1-M/T (LHD)> (CONTINUED)

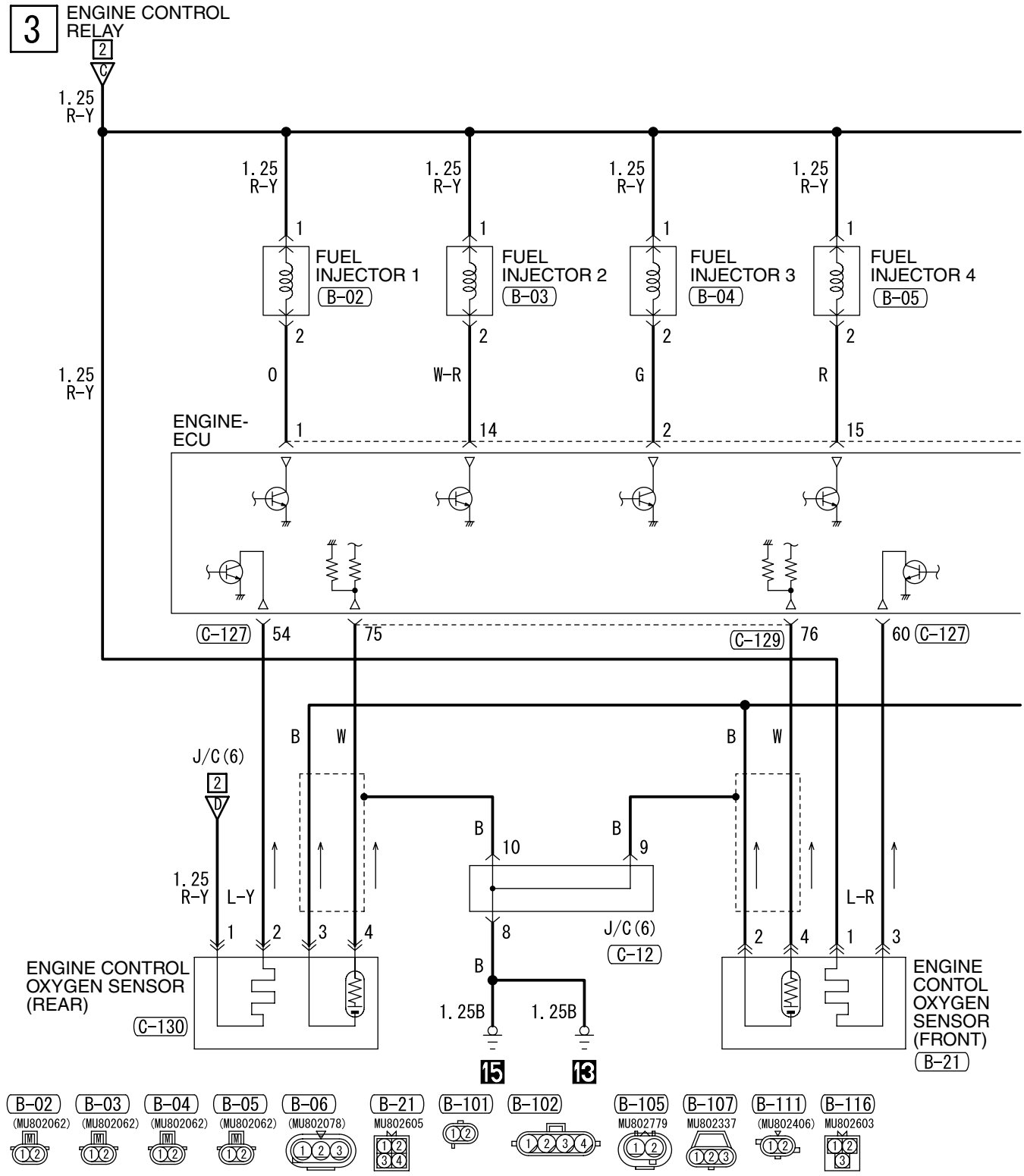

H4J05E00BA

4

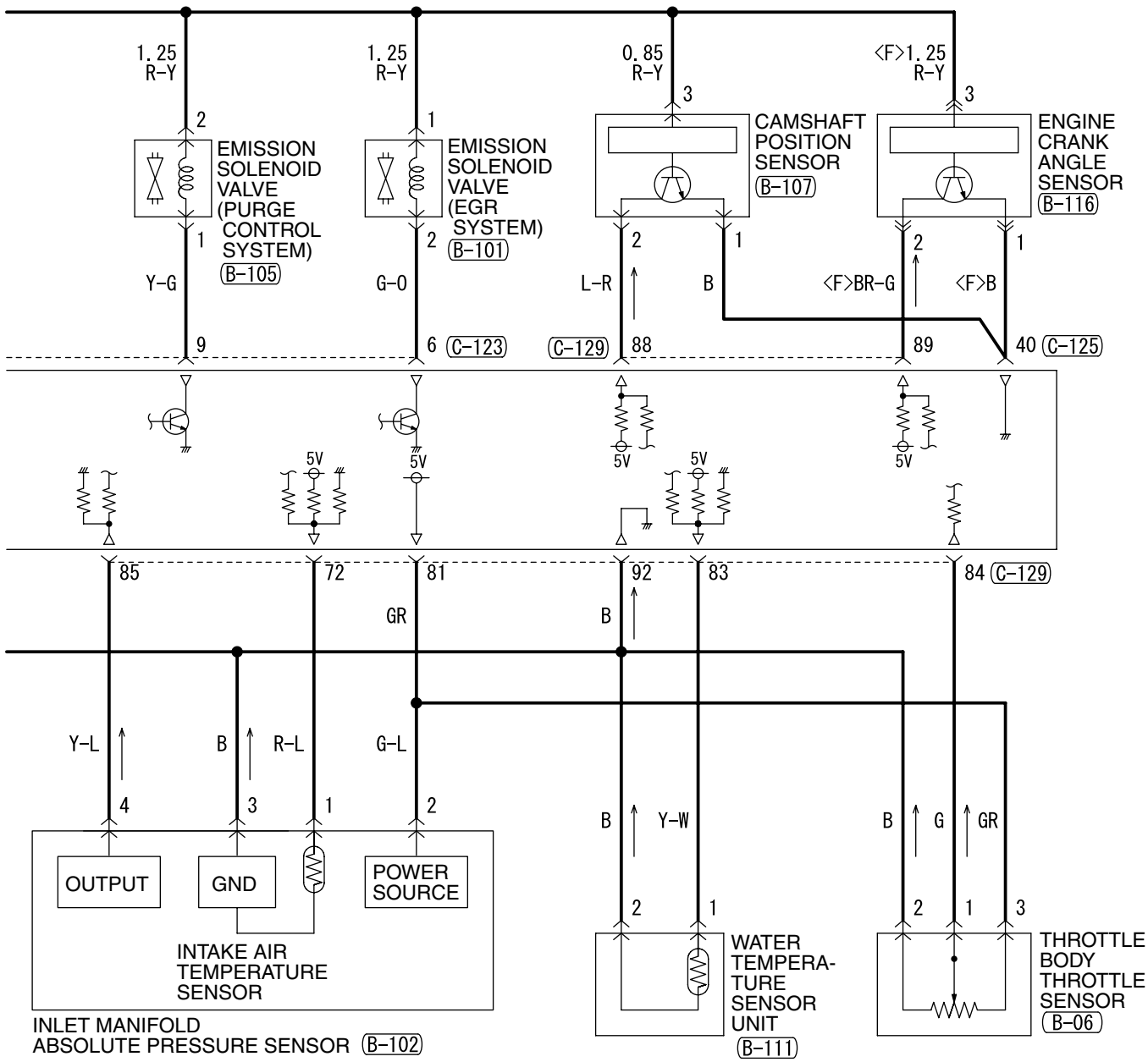

Wire colour code
B : Black LG : Light green G : Green L : Blue W : White Y : Yellow SB : Sky blue
BR : Brown O : Orange GR : Gray R : Red P : Pink V : Violet

H4J05E00BB

ENGINE CONTROL SYSTEM <4G1-M/T (LHD)> (CONTINUED)

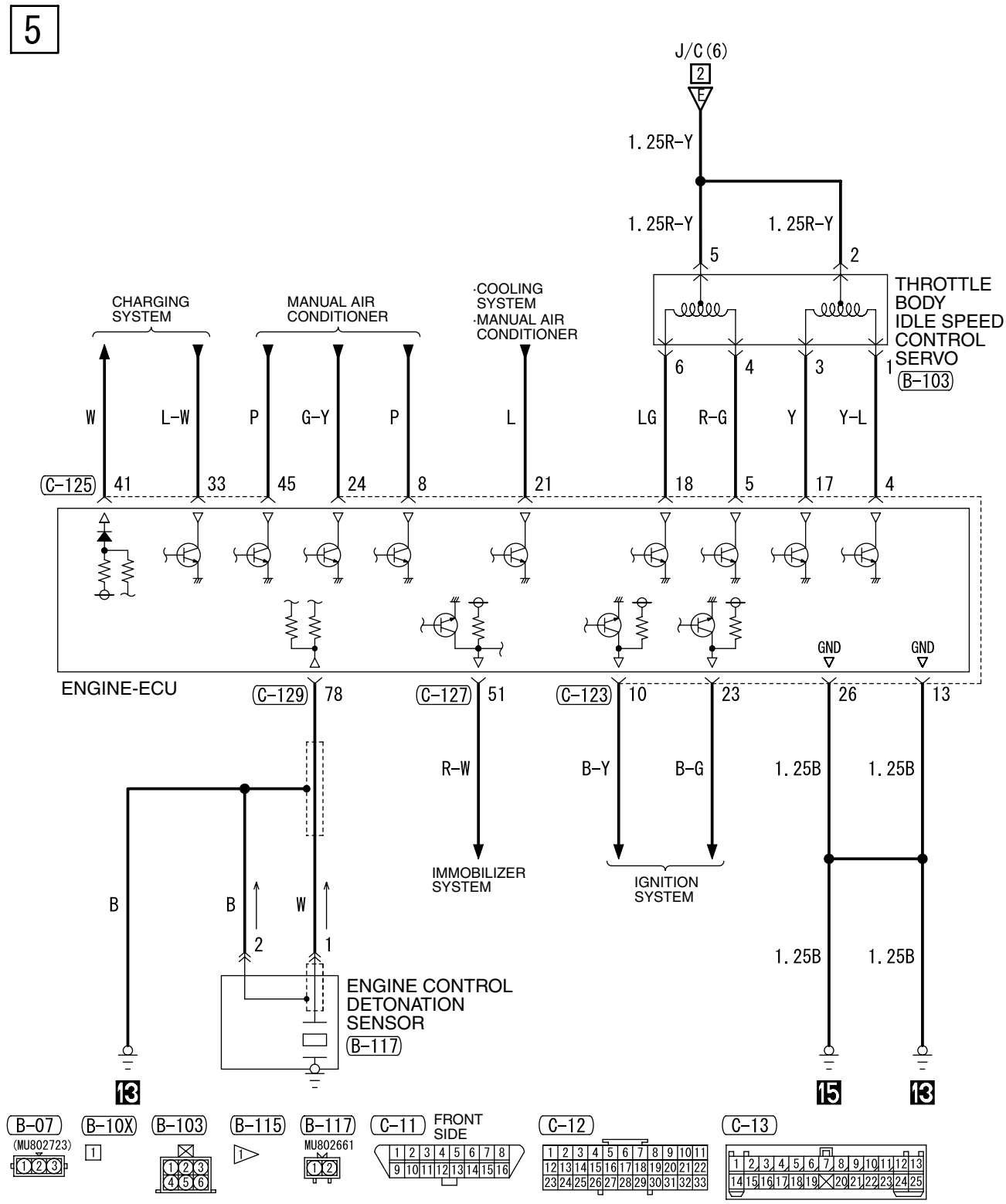

H4J05E00CA

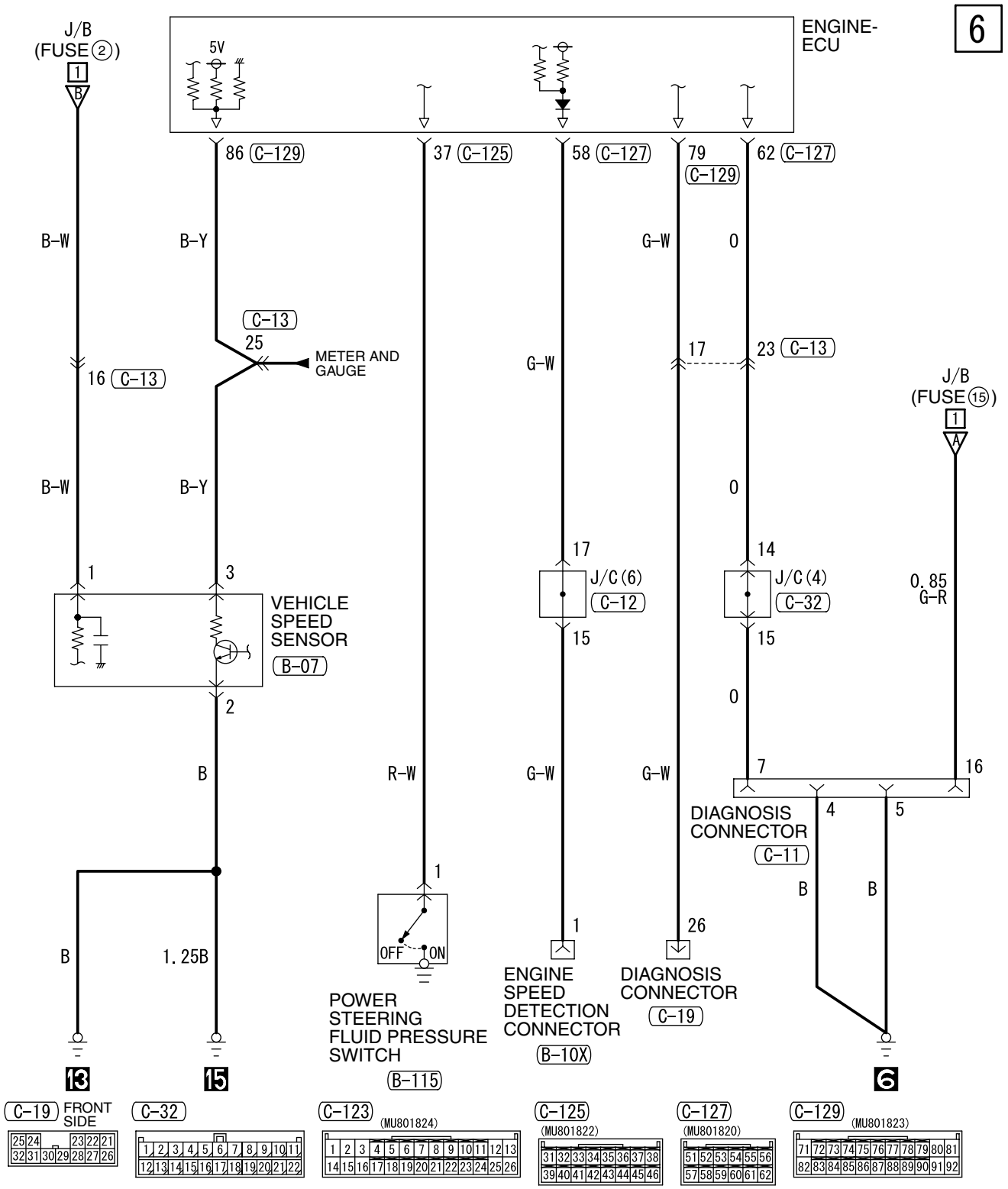

Wire colour code
B : Black LG : Light green G : Green L : Blue W : White Y : Yellow SB : Sky blue
BR : Brown O : Orange GR : Gray R : Red P : Pink V : Violet

H4J05E00CB

ENGINE CONTROL SYSTEM <4G1-M/T (RHD)>

M1901000801438

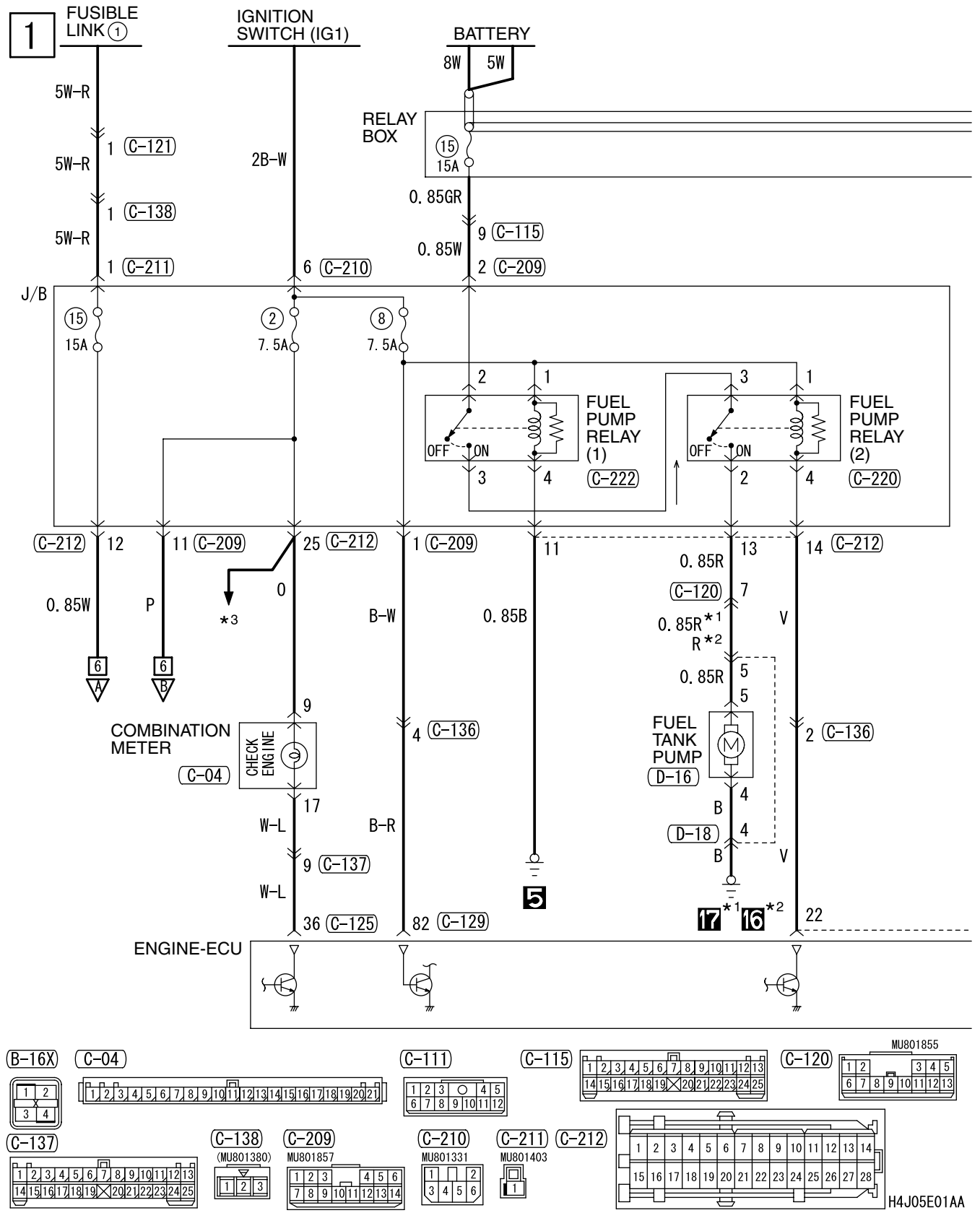

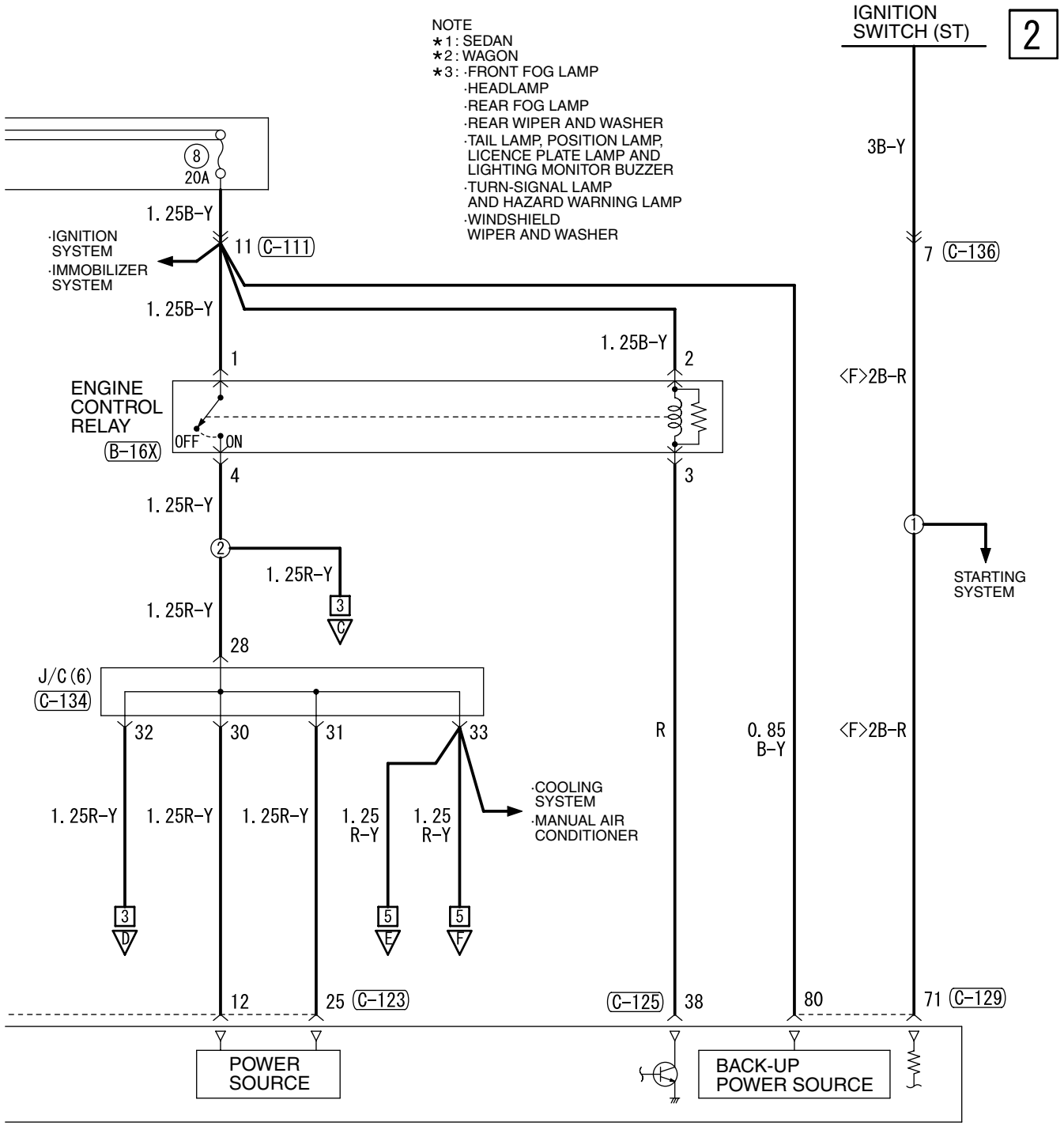

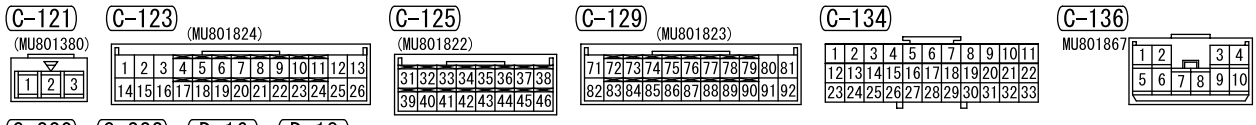

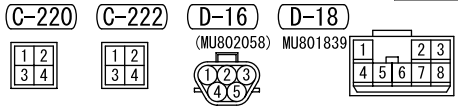

Wire colour code
B : Black LG : Light green G : Green L : Blue
W : White Y : Yellow SB : Sky blue BR : Brown
O : Orange GR : Gray R : Red P : Pink V : Violet

H4J05E01AB

ENGINE CONTROL SYSTEM <4G1-M/T (RHD)> (CONTINUED)

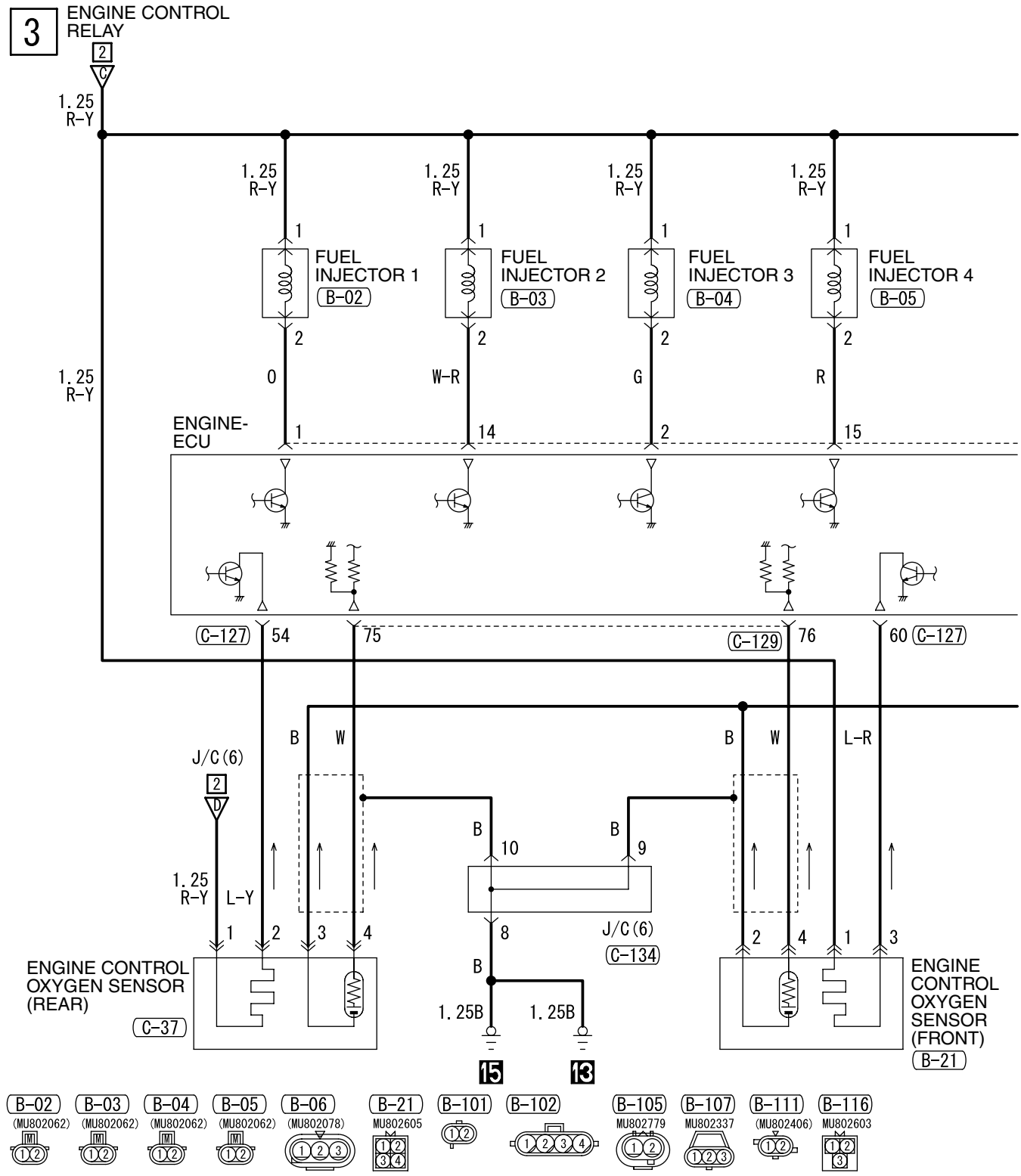

H4J05E01BA

4

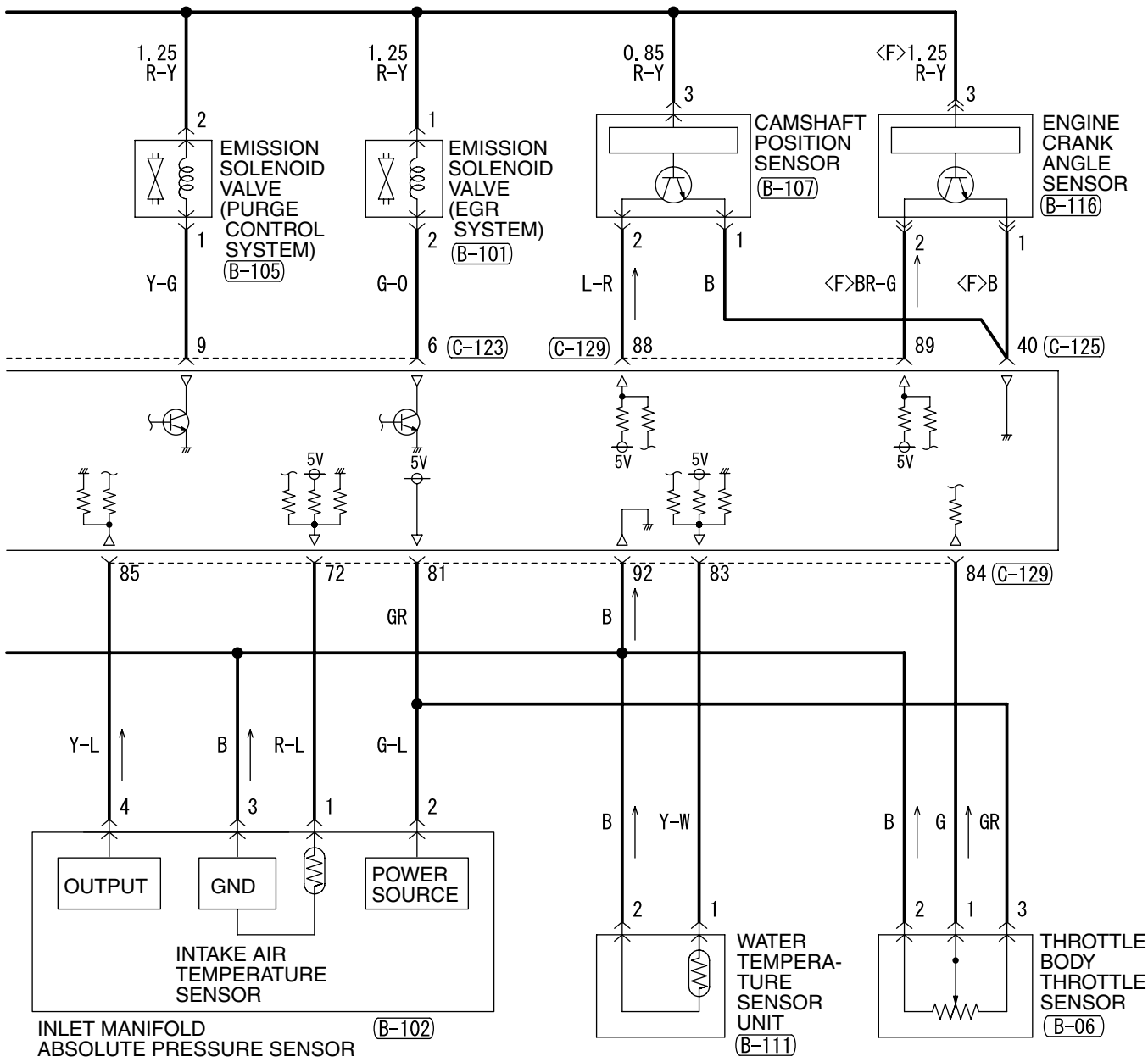

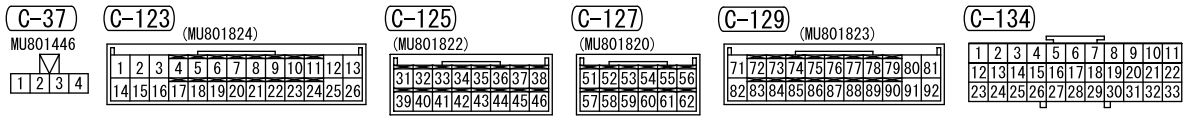

Wire colour code
B : Black LG : Light green G : Green L : Blue W : White Y : Yellow SB : Sky blue
BR : Brown O : Orange GR : Gray R : Red P : Pink V : Violet

H4J05E01BB

ENGINE CONTROL SYSTEM <4G1-M/T (RHD)> (CONTINUED)

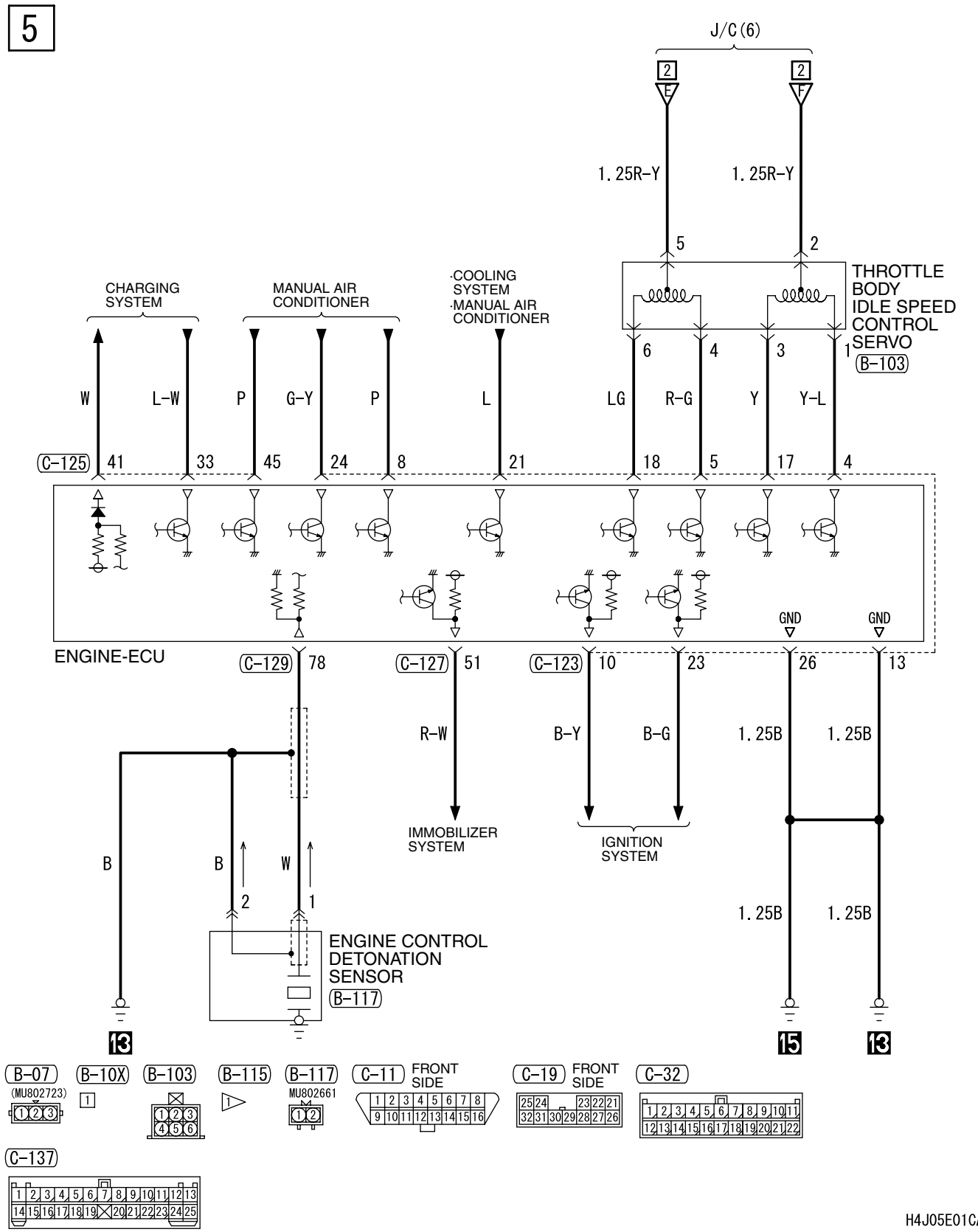

H4J05E01CA

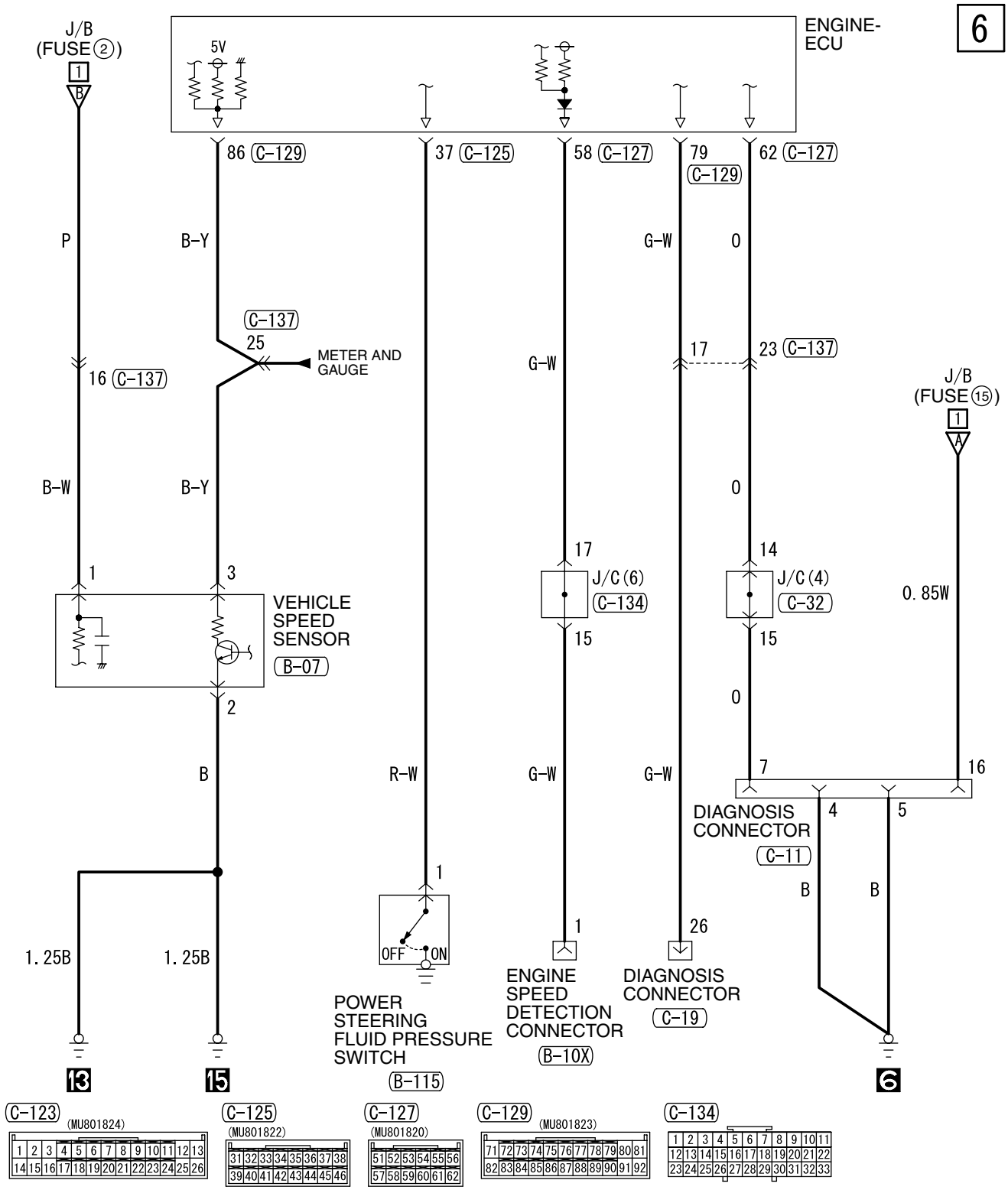

Wire colour code
B : Black LG : Light green G : Green L : Blue W : White Y : Yellow SB : Sky blue
BR : Brown O : Orange GR : Gray R : Red P : Pink V : Violet

H4J05E01CB

ENGINE CONTROL SYSTEM <4G1-A/T (LHD)>

M1901000801449

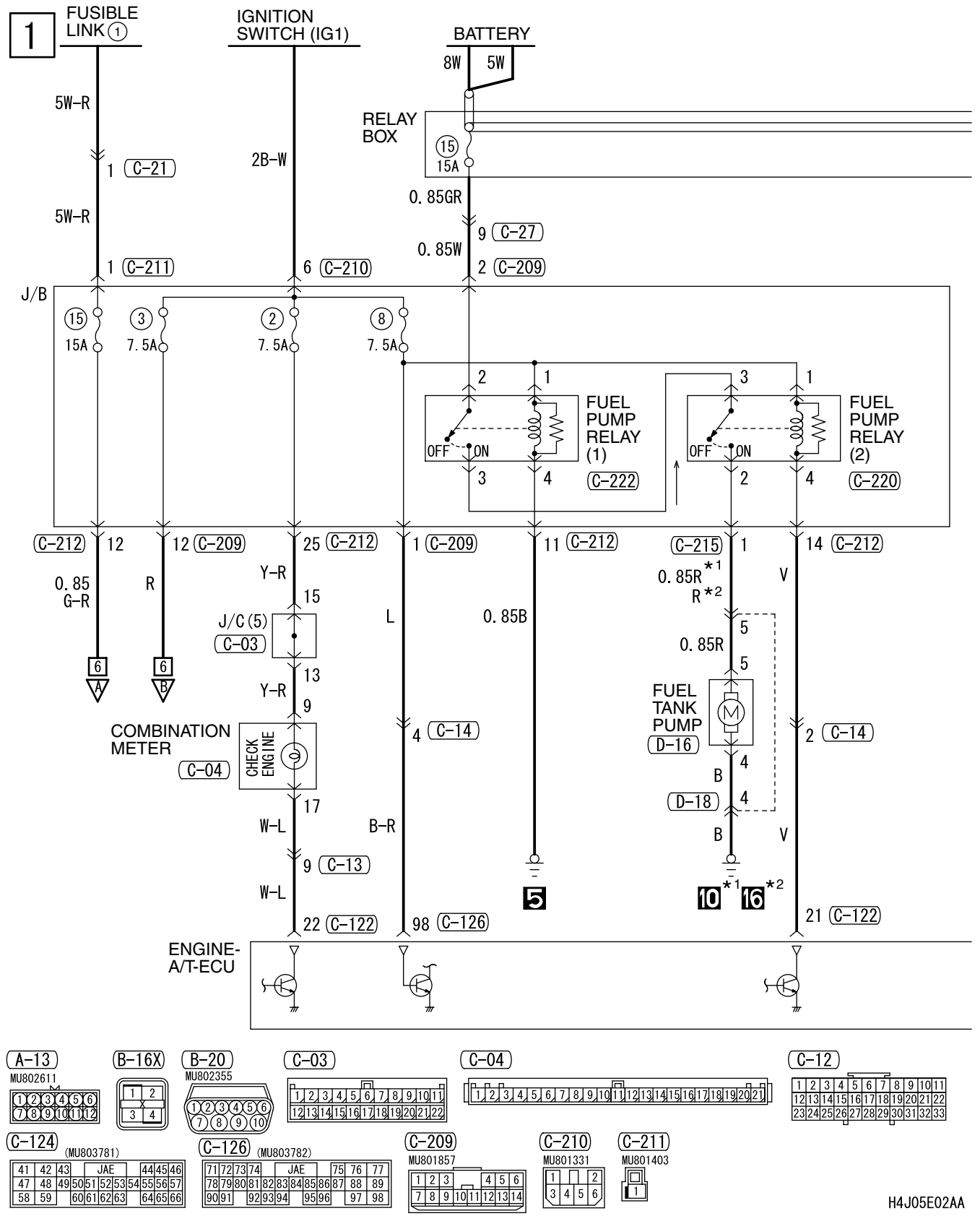

H4J05E02AA

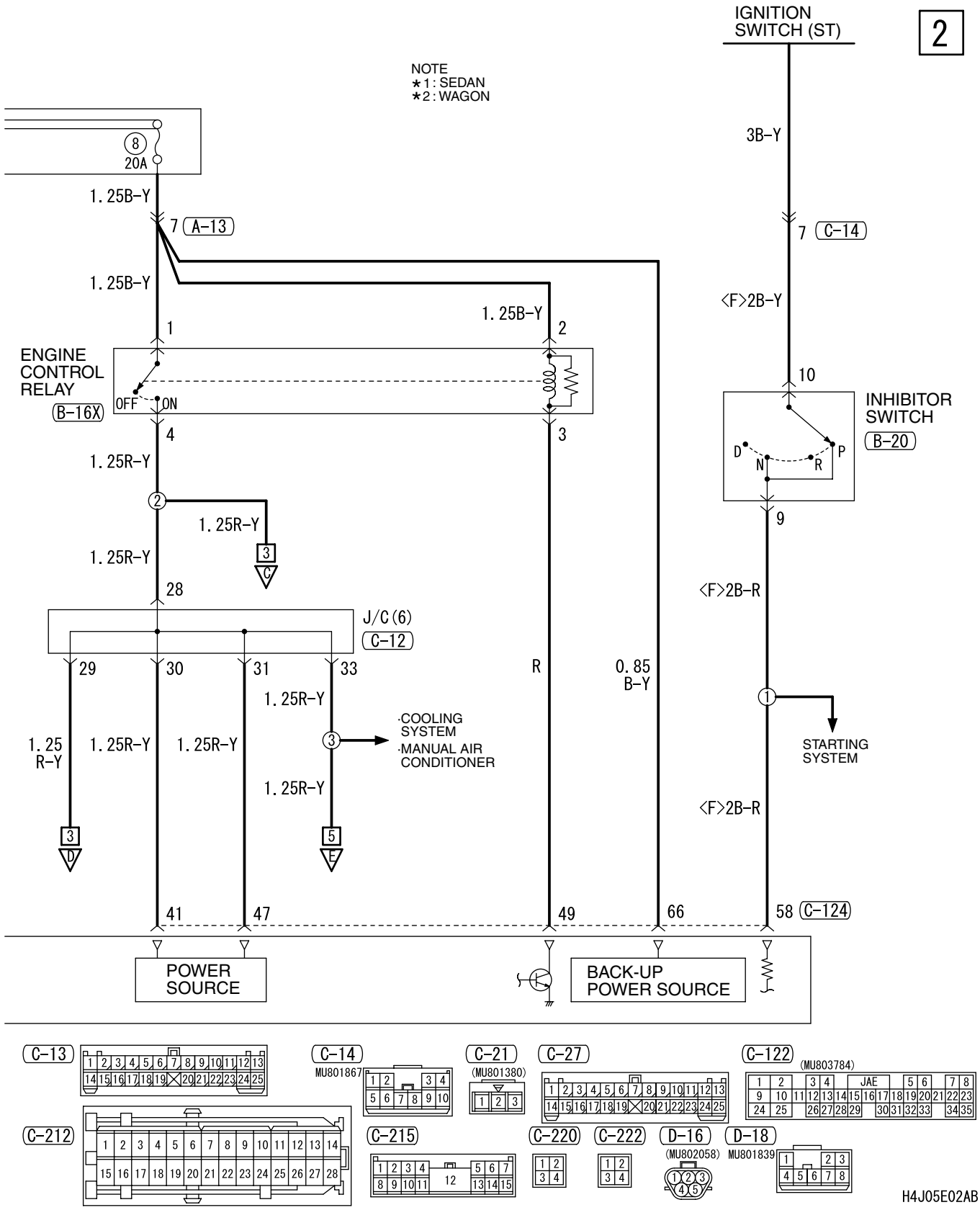
IGNITION SWITCH (ST)
2
NOTE
★1: SEDAN
★2: WAGON
8
20A
1.25B-Y
7 A-13
3B-Y
7 C-14
1.25B-Y
<F>2B-Y
1.25B-Y
1
2
ENGINE CONTROL RELAY
B-16X
OFF
ON
4
3
10
INHIBITOR SWITCH
B-20
D
N
R
P
9
1.25R-Y
2
1.25R-Y
3
C
1.25R-Y
28
<F>2B-R
J/C (6)
C-12
29
30
31
33
R
0.85 B-Y
1.25R-Y
·COOLING SYSTEM
·MANUAL AIR CONDITIONER
1.25 R-Y
1.25R-Y
1.25R-Y
1.25R-Y
STARTING SYSTEM
<F>2B-R
3
D
5
E
41
47
49
66
58 C-124
POWER SOURCE
BACK-UP POWER SOURCE
C-13
C-14
MU801867
C-21
(MU801380)
C-27
C-122
(MU803784)
JAE
C-212
C-215
C-220
C-222
D-16
(MU802058)
D-18
MU801839
H4J05E02AB

ENGINE CONTROL SYSTEM <4G1-A/T (LHD)> (CONTINUED)

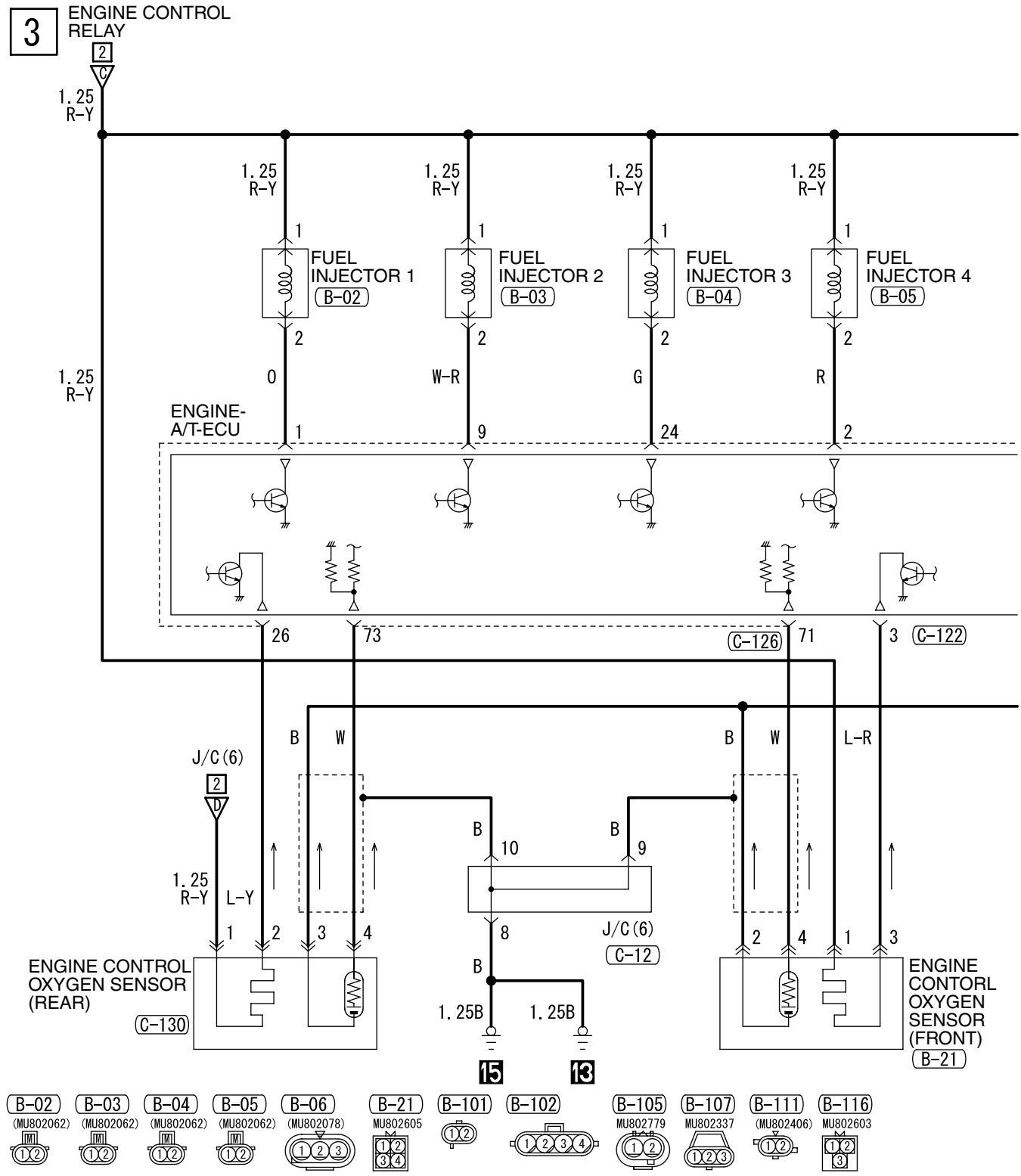

H4J05E02BA

4

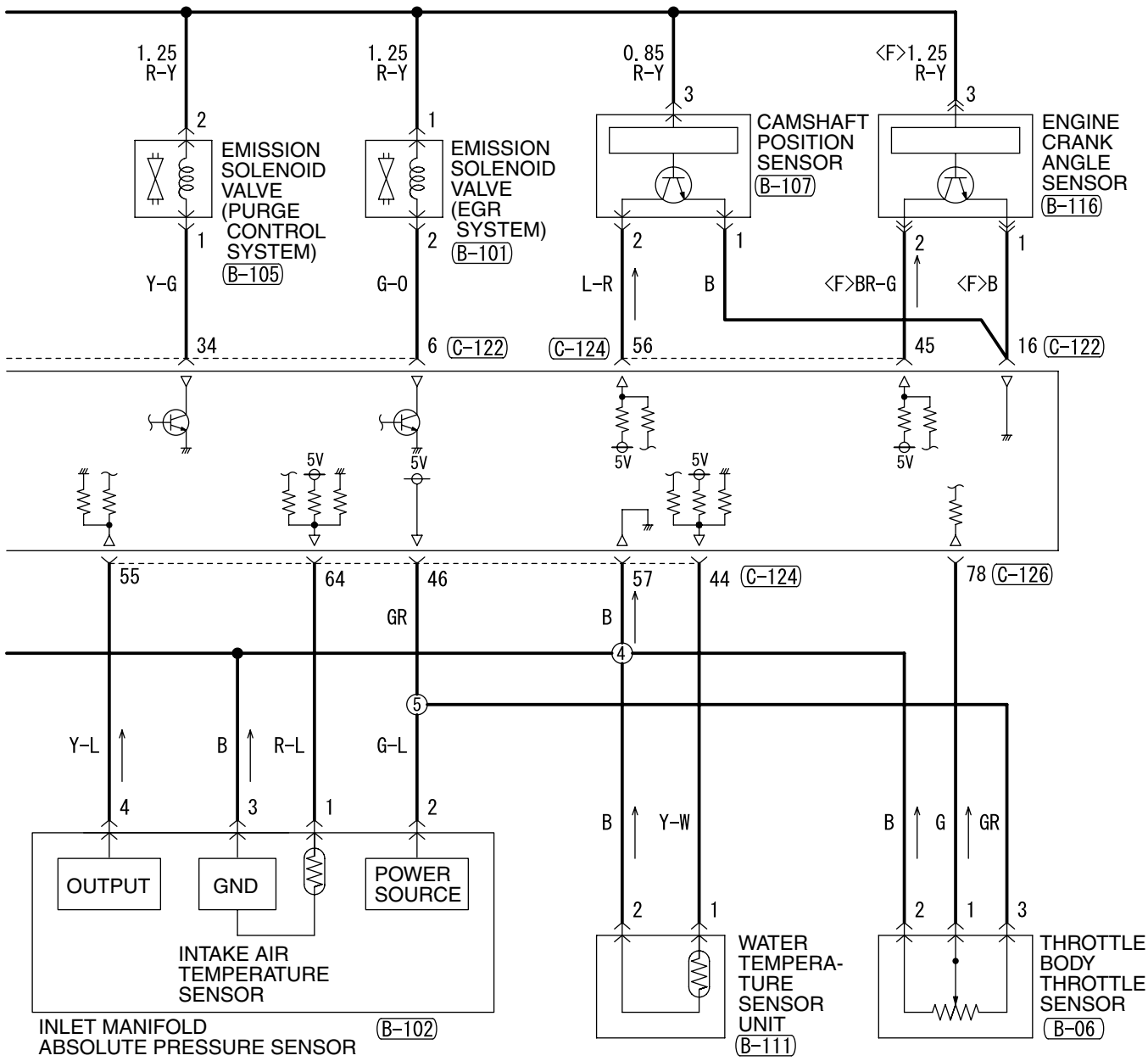

C-12

1	2	3	4	5	6	7	8	9	10	11
12	13	14	15	16	17	18	19	20	21	22
23	24	25	26	27	28	29	30	31	32	33

C-122 (MU803784)

1	2		3	4		JAE			5	6		7	8	
9	10	11	12	13	14	15	16	17	18	19	20	21	22	23
24	25		26	27	28	29		30	31	32	33		34	35

C-124 (MU803781)

41	42	43		JAE					44	45	46	
47	48	49	50	51	52	53	54		55	56	57	
58	59		60	61	62	63			64	65	66	

C-126 (MU803782)

71	72	73	74		JAE				75	76	77			
78	79	80	81	82	83	84	85	86	87	88	89			
90	91		92	93	94		95	96		97	98			

C-130 MU801446

1	2	3	4

Wire colour code
B : Black LG : Light green G : Green L : Blue W : White Y : Yellow SB : Sky blue
BR : Brown O : Orange GR : Gray R : Red P : Pink V : Violet

H4J05E02BB

ENGINE CONTROL SYSTEM <4G1-A/T (LHD)> (CONTINUED)

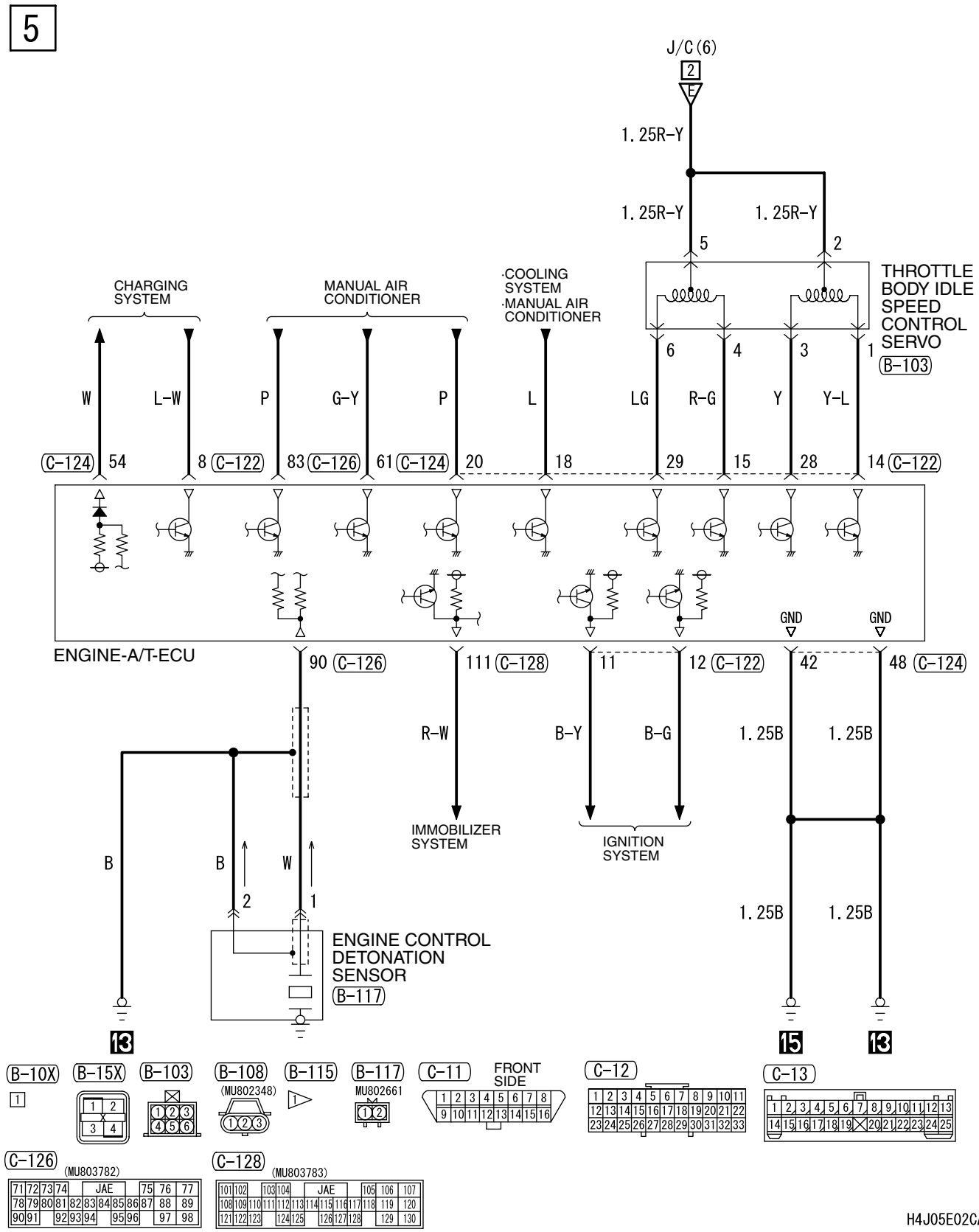

H4J05E02CA

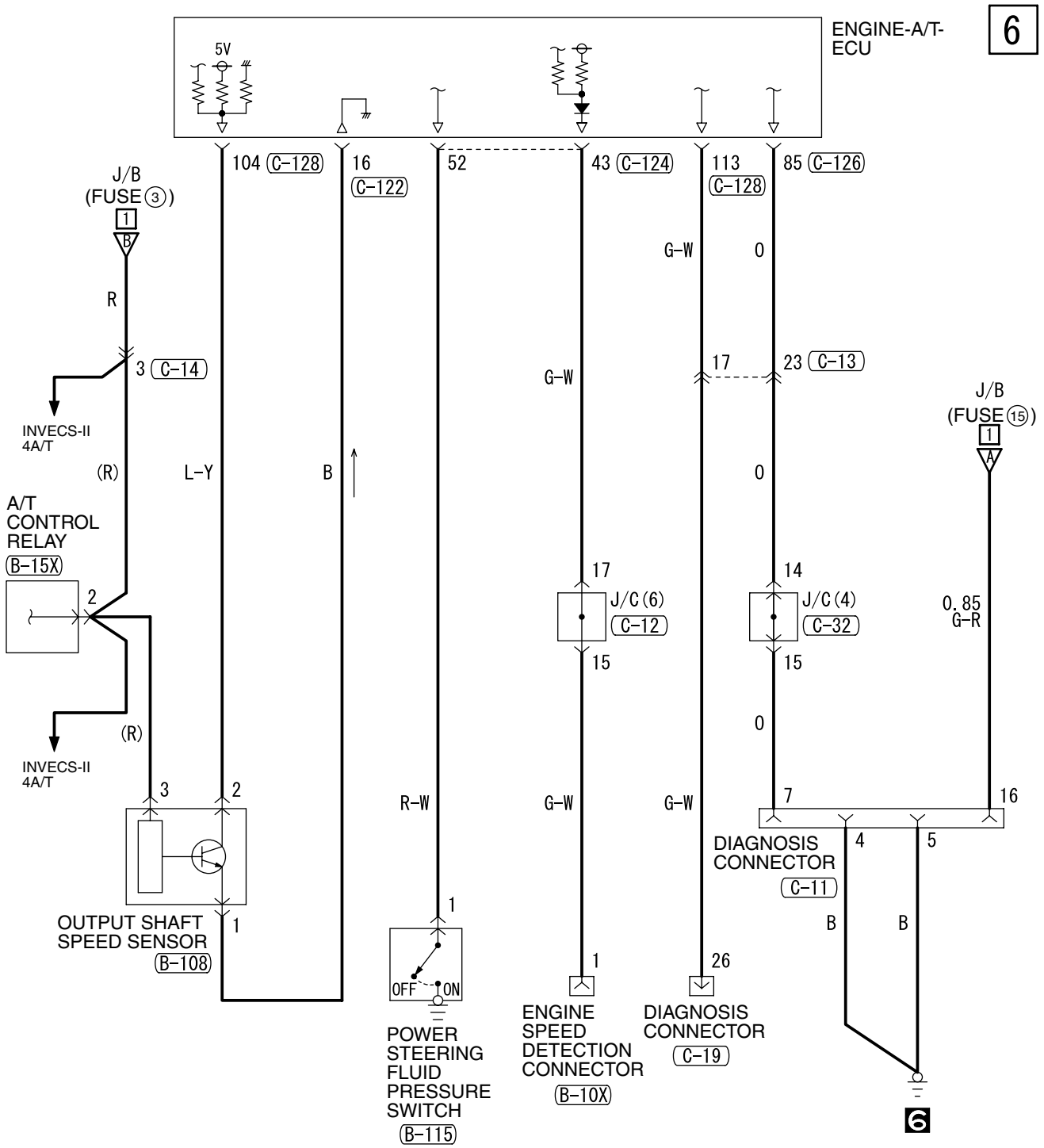

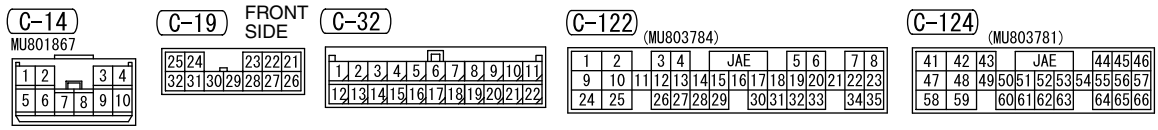

Wire colour code
B : Black LG : Light green G : Green L : Blue W : White Y : Yellow SB : Sky blue
BR : Brown O : Orange GR : Gray R : Red P : Pink V : Violet

H4J05E02CB

ENGINE CONTROL SYSTEM <4G1-A/T (RHD)>

M1901000801450

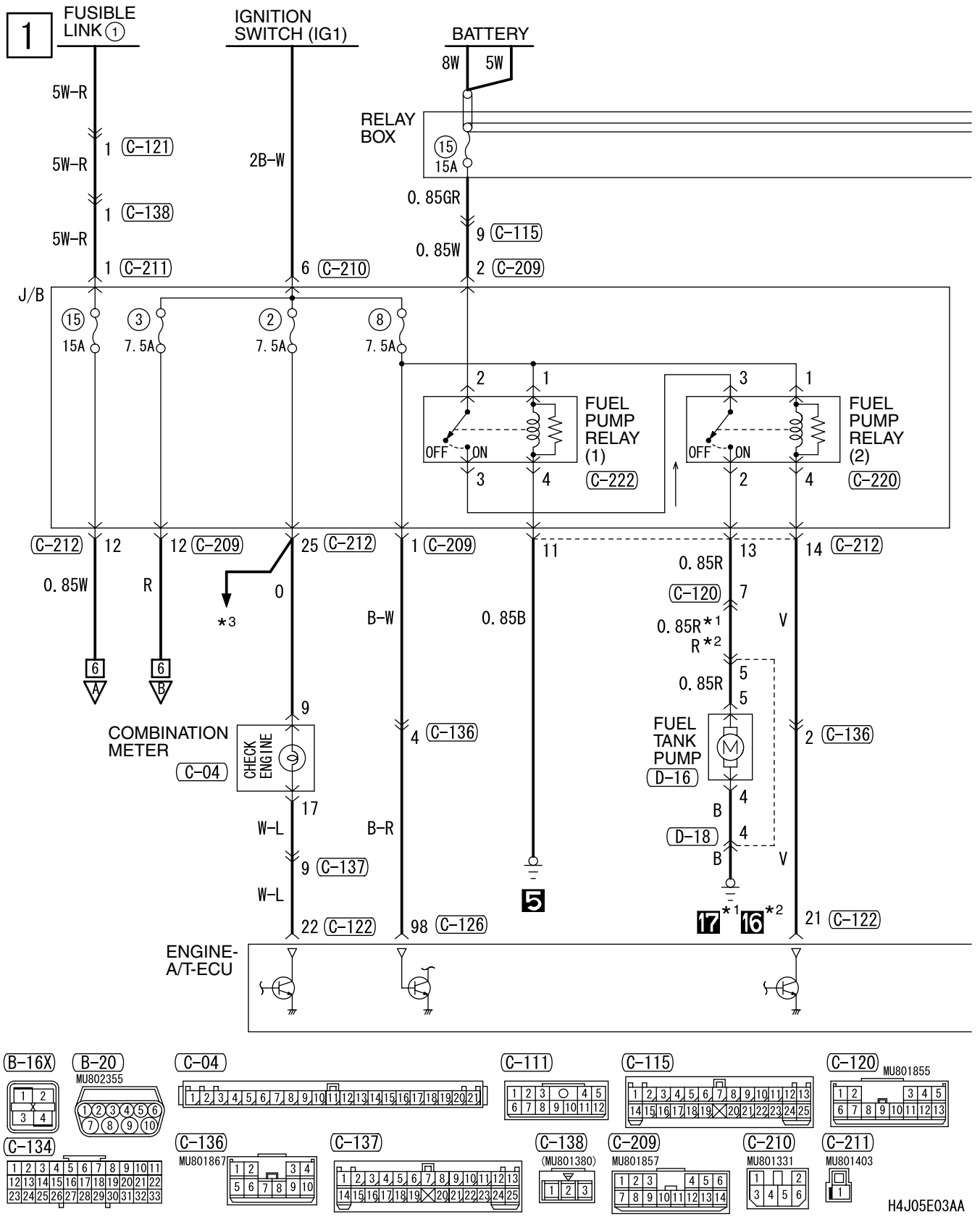

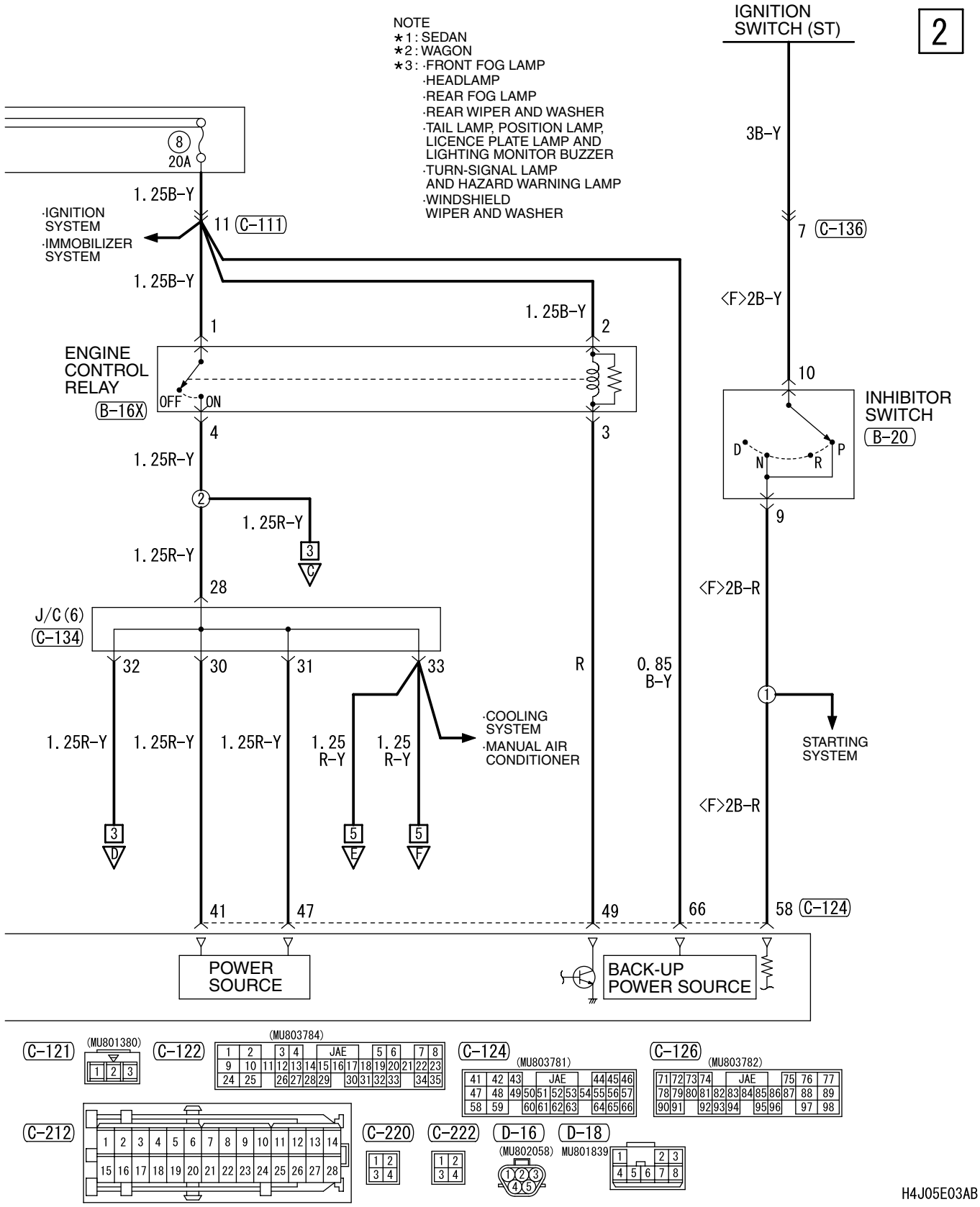
NOTE
★1: SEDAN
★2: WAGON
★3: ·FRONT FOG LAMP
·HEADLAMP
·REAR FOG LAMP
·REAR WIPER AND WASHER
·TAIL LAMP, POSITION LAMP, LICENCE PLATE LAMP AND LIGHTING MONITOR BUZZER
·TURN-SIGNAL LAMP AND HAZARD WARNING LAMP
·WINDSHIELD WIPER AND WASHER
IGNITION SWITCH (ST)
2
8
20A
1.25B-Y
·IGNITION SYSTEM
·IMMOBILIZER SYSTEM
11 C-111
3B-Y
7 C-136
<F>2B-Y
1.25B-Y
1.25B-Y
1
2
ENGINE CONTROL RELAY
B-16X
OFF
ON
4
3
10
INHIBITOR SWITCH
B-20
D
N
R
P
9
1.25R-Y
1.25R-Y
1.25R-Y
28
J/C(6)
C-134
32
30
31
33
R
0.85 B-Y
<F>2B-R
·COOLING SYSTEM
·MANUAL AIR CONDITIONER
STARTING SYSTEM
1.25R-Y
1.25R-Y
1.25R-Y
1.25 R-Y
1.25 R-Y
<F>2B-R
41
47
49
66
58 C-124
POWER SOURCE
BACK-UP POWER SOURCE
C-121
(MU801380)
C-122
(MU803784)
C-124
(MU803781)
C-126
(MU803782)
C-212
C-220
C-222
D-16
(MU802058)
D-18
MU801839
H4J05E03AB

ENGINE CONTROL SYSTEM <4G1-M/T (RHD)> (CONTINUED)

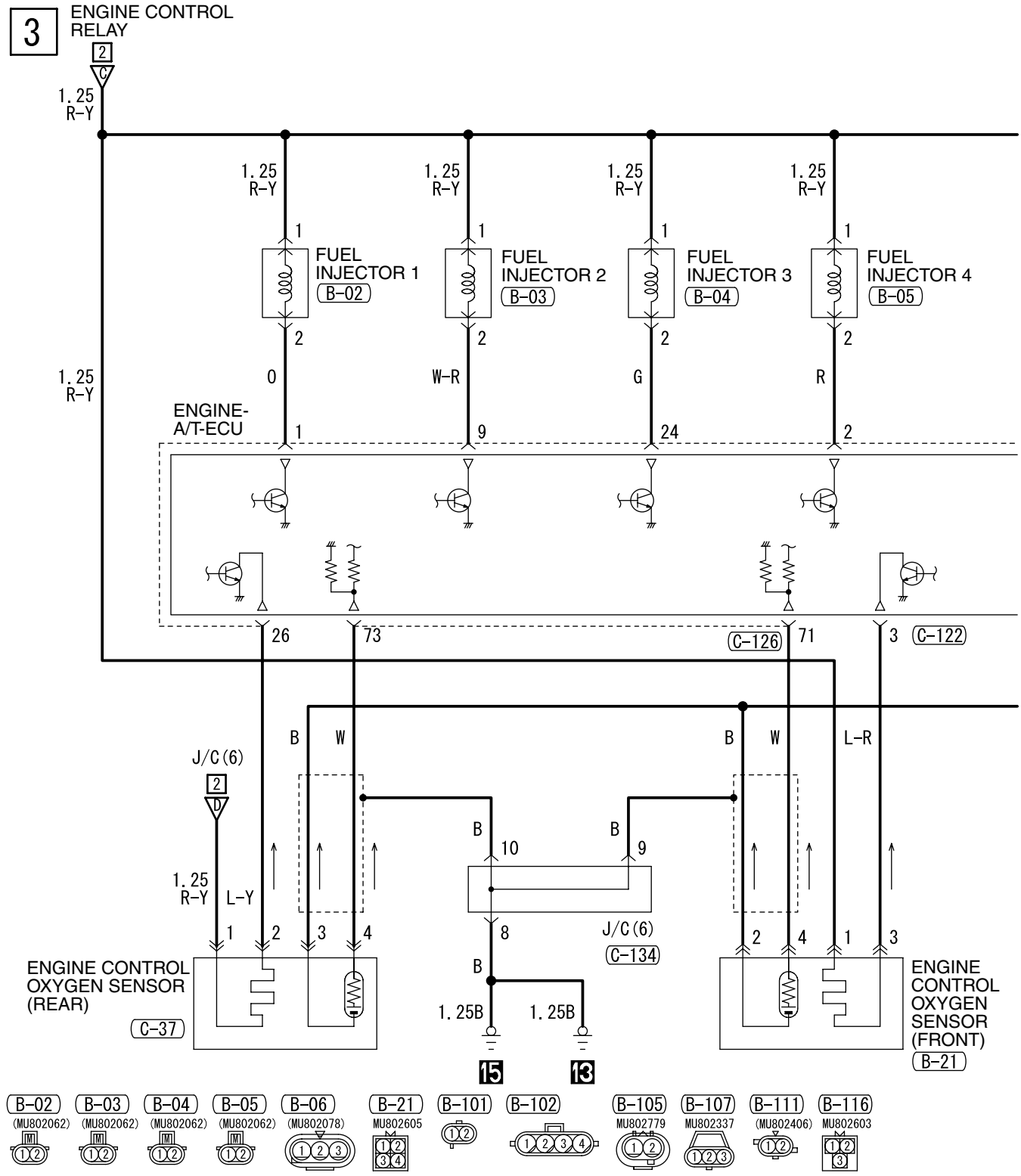

H4J05E03BA

4

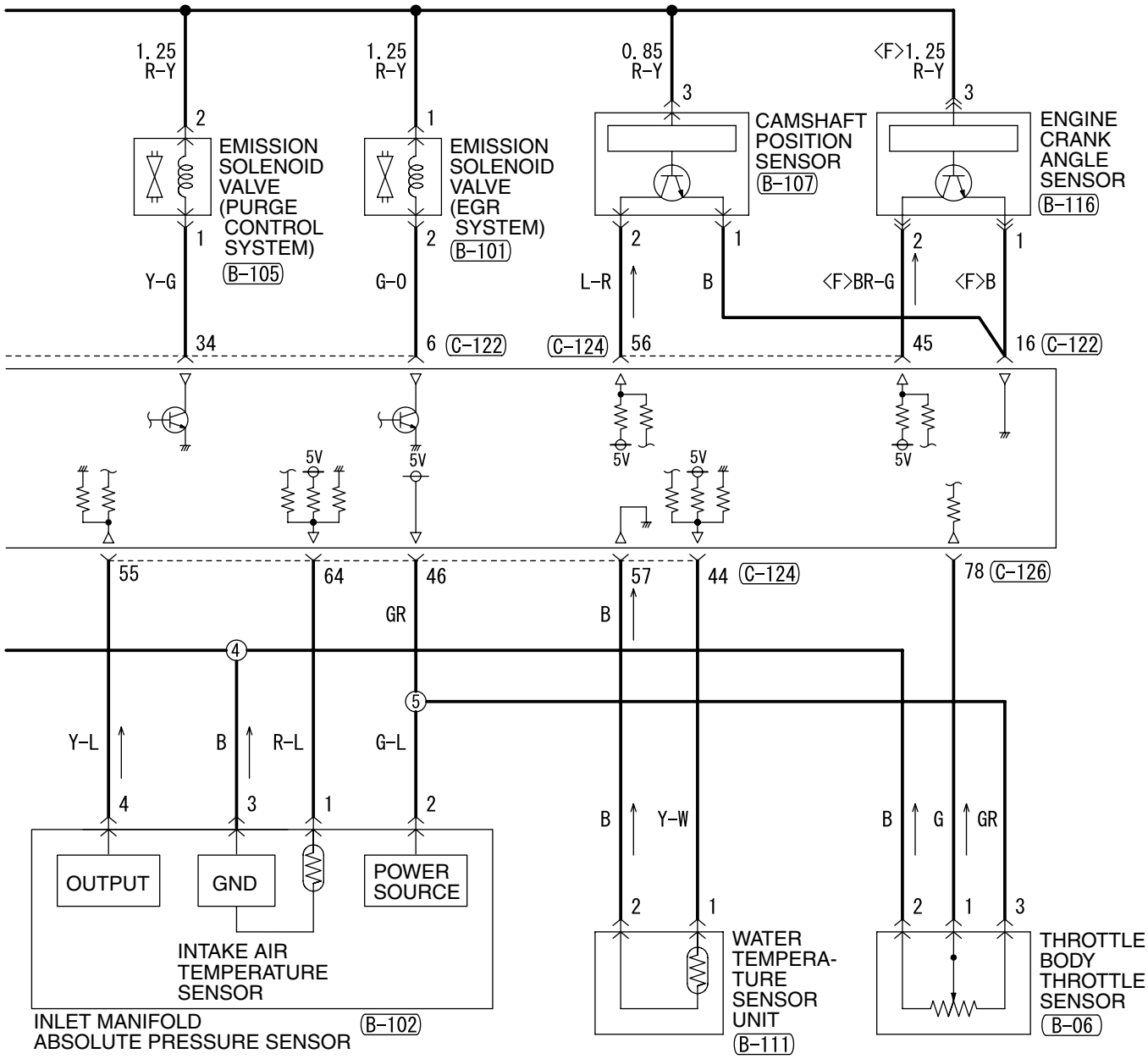

C-37

MU801446

1	2	3	4

C-122 (MU803784)

1	2		3	4		JAE					5	6		7	8								
9	10	11	12	13	14	15	16	17	18	19	20	21	22	23									
24	25		26	27	28	29		30	31	32	33		34	35									

C-124 (MU803781)

41	42	43		JAE				44	45	46				
47	48	49	50	51	52	53	54	55	56	57				
58	59		60	61	62	63		64	65	66				

C-126 (MU803782)

71	72	73	74		JAE				75	76	77			
78	79	80	81	82	83	84	85	86	87	88	89			
90	91		92	93	94		95	96		97	98			

C-134

1	2	3	4	5	6	7	8	9	10	11				
12	13	14	15	16	17	18	19	20	21	22				
23	24	25	26	27	28	29	30	31	32	33				

Wire colour code
B : Black LG : Light green G : Green L : Blue W : White Y : Yellow SB : Sky blue
BR : Brown O : Orange GR : Gray R : Red P : Pink V : Violet

H4J05E03BB

ENGINE CONTROL SYSTEM <4G1-A/T (RHD)> (CONTINUED)

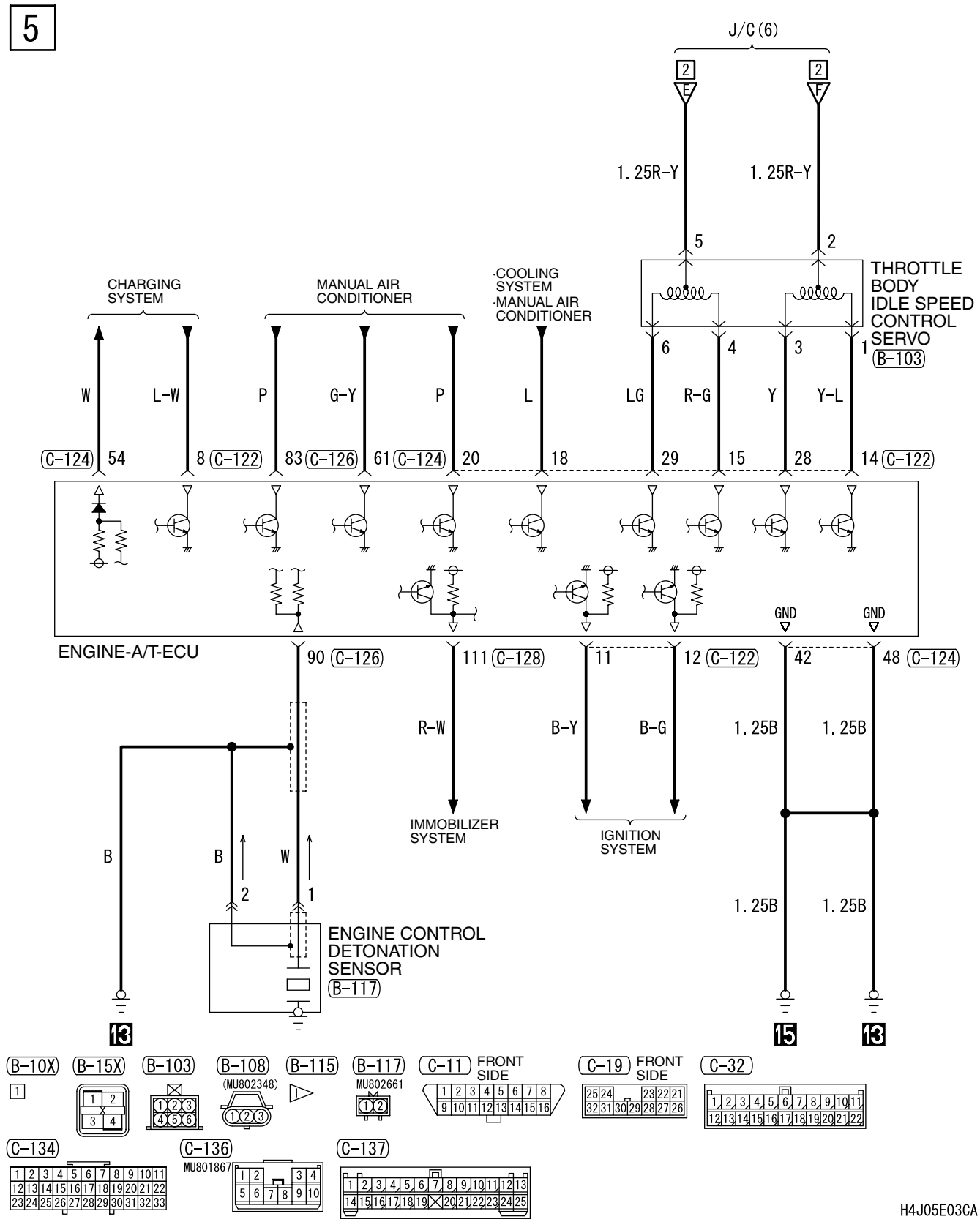

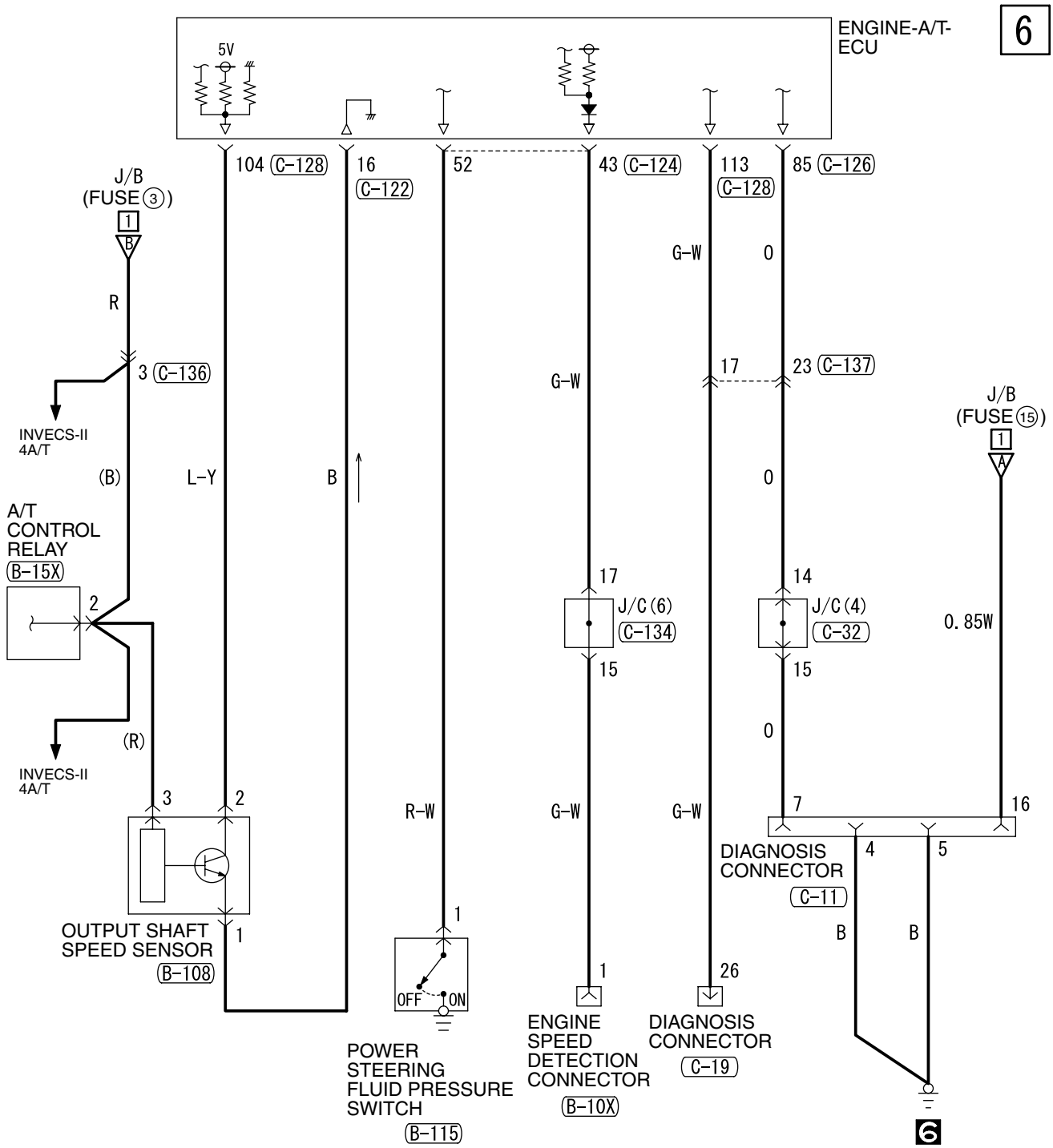

(C-122) (MU803784)

1	2		3	4		JAE				5	6		7	8									
9	10	11	12	13	14	15	16	17	18	19	20	21	22	23									
24	25		26	27	28	29		30	31	32	33		34	35									

(C-124) (MU803781)

41	42	43		JAE					44	45	46			
47	48	49	50	51	52	53	54		55	56	57			
58	59		60	61	62	63			64	65	66			

(C-126) (MU803782)

71	72	73	74		JAE				75	76	77			
78	79	80	81	82	83	84	85	86	87	88	89			
90	91		92	93	94		95	96		97	98			

(C-128) (MU803783)

101	102		103	104		JAE			105	106	107			
108	109	110	111	112	113	114	115	116	117	118	119	120		
121	122	123		124	125		126	127	128		129	130		

Wire colour code
B : Black LG : Light green G : Green L : Blue W : White Y : Yellow SB : Sky blue
BR : Brown O : Orange GR : Gray R : Red P : Pink V : Violet

H4J05E03CB

ENGINE CONTROL SYSTEM <4G6 (LHD)>

M1901000801461

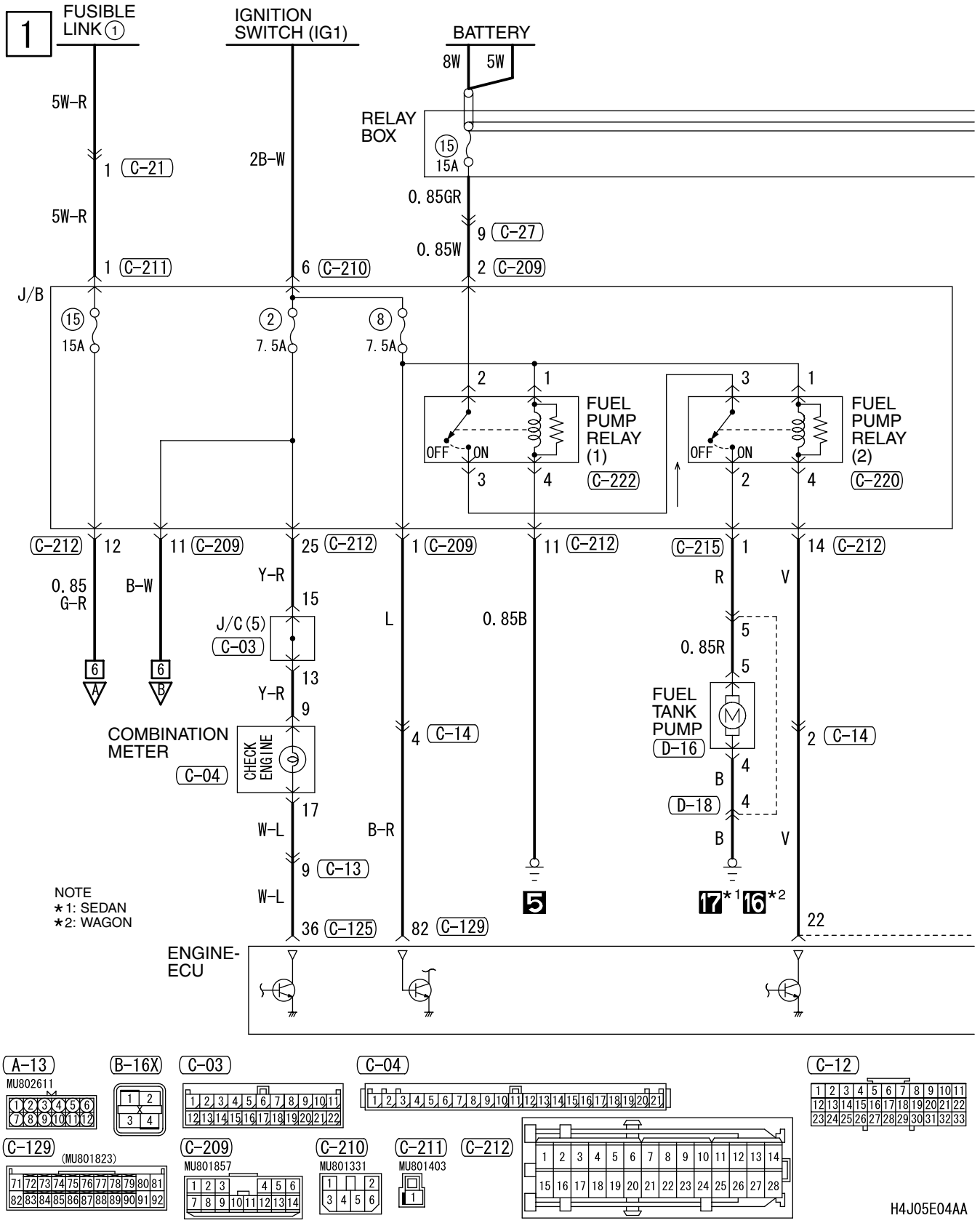

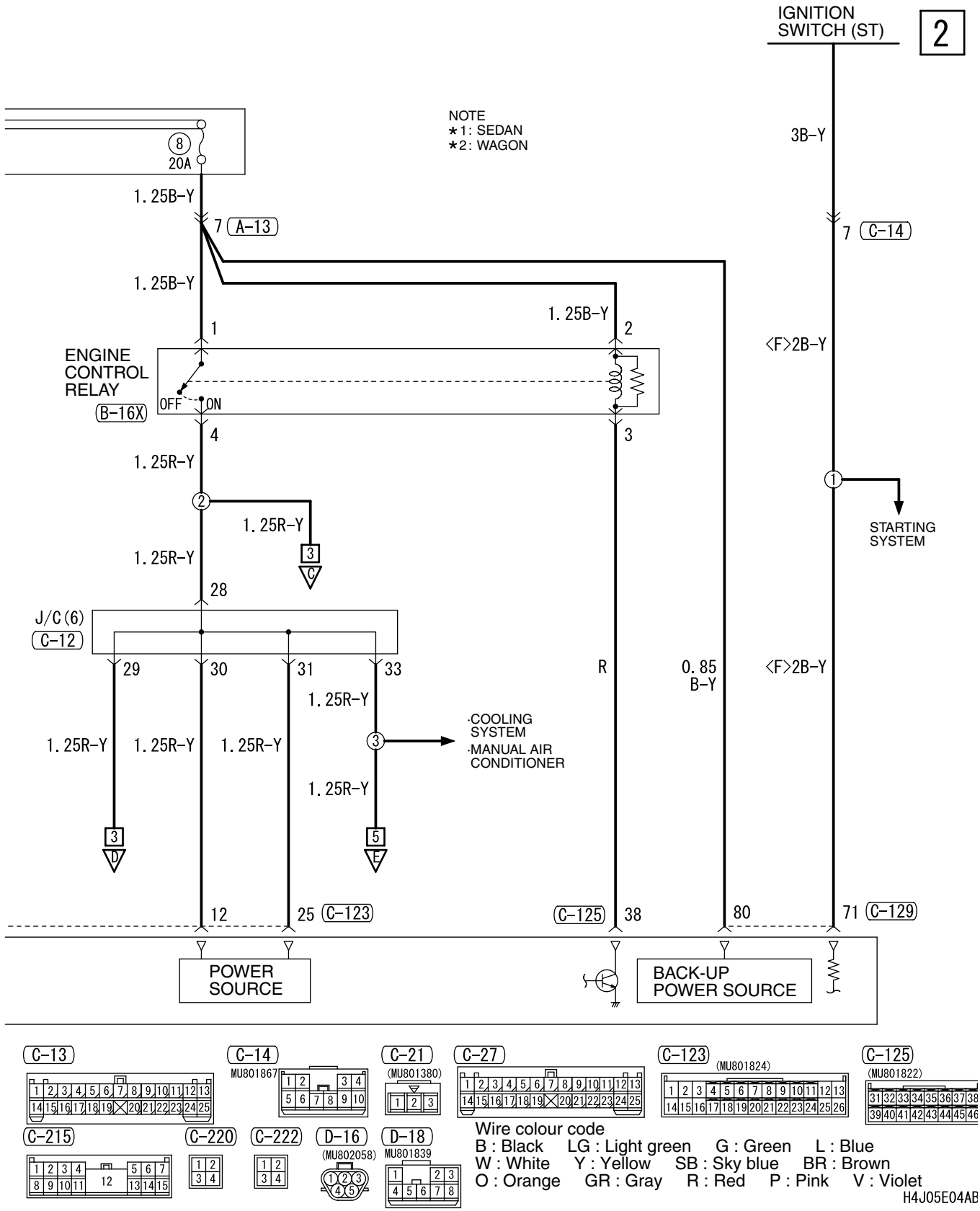
IGNITION SWITCH (ST)
2
NOTE
*1: SEDAN
*2: WAGON
8
20A
1.25B-Y
7 A-13
3B-Y
7 C-14
1.25B-Y
1.25B-Y
1
2
<F>2B-Y
ENGINE CONTROL RELAY
B-16X
OFF
ON
4
3
1.25R-Y
1
STARTING SYSTEM
2
1.25R-Y
3
C
1.25R-Y
28
J/C (6)
C-12
29
30
31
33
R
0.85 B-Y
<F>2B-Y
1.25R-Y
1.25R-Y
1.25R-Y
1.25R-Y
3
·COOLING SYSTEM
·MANUAL AIR CONDITIONER
1.25R-Y
3
D
5
E
12
25 C-123
C-125
38
80
71 C-129
POWER SOURCE
BACK-UP POWER SOURCE
C-13
C-14
MU801867
C-21
(MU801380)
C-27
C-123
(MU801824)
C-125
(MU801822)
C-215
C-220
C-222
D-16
(MU802058)
D-18
MU801839
Wire colour code
B : Black LG : Light green G : Green L : Blue
W : White Y : Yellow SB : Sky blue BR : Brown
O : Orange GR : Gray R : Red P : Pink V : Violet
H4J05E04AB

ENGINE CONTROL SYSTEM <4G6 (LHD)> (CONTINUED)

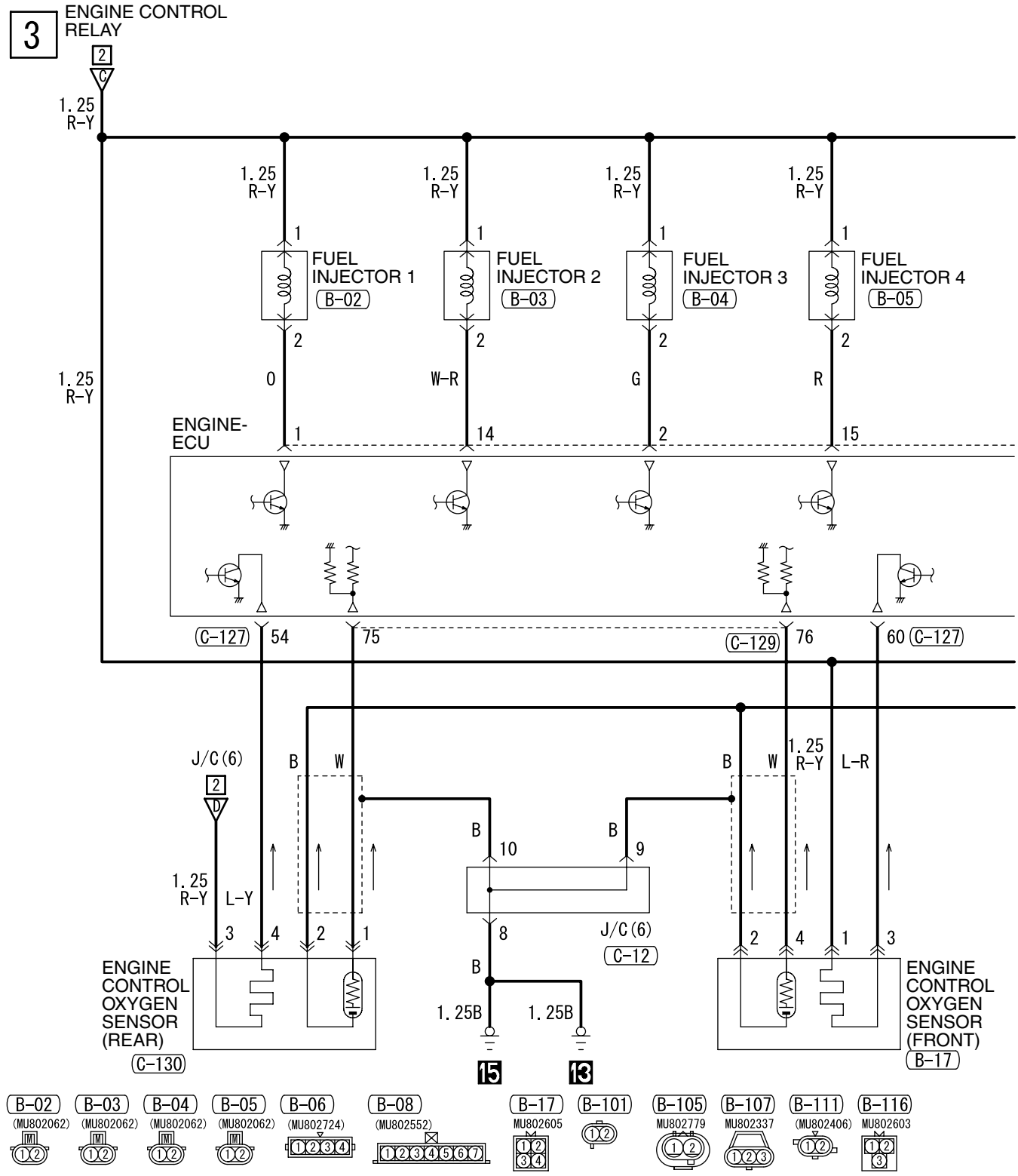

H4J05E04BA

4

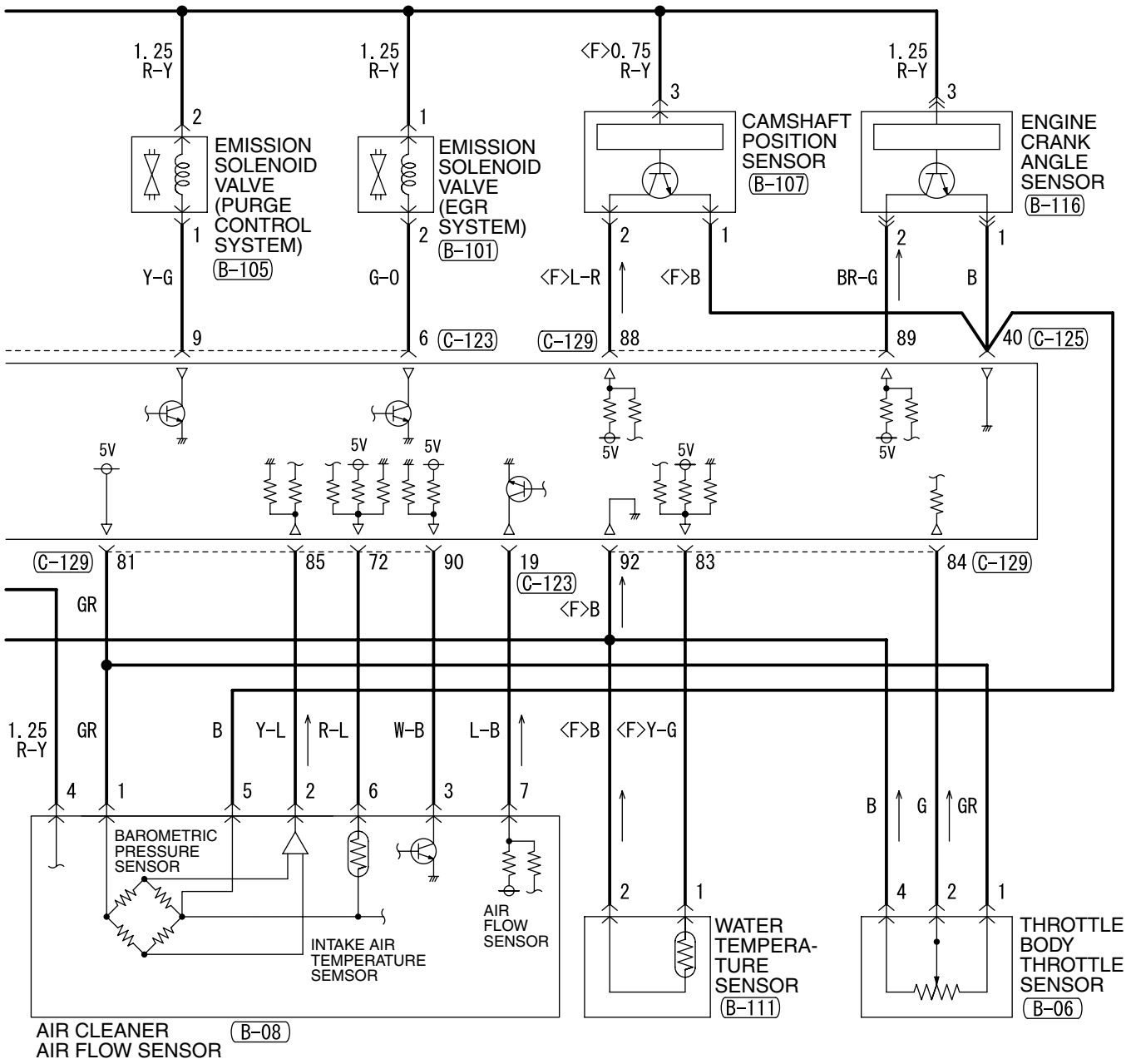

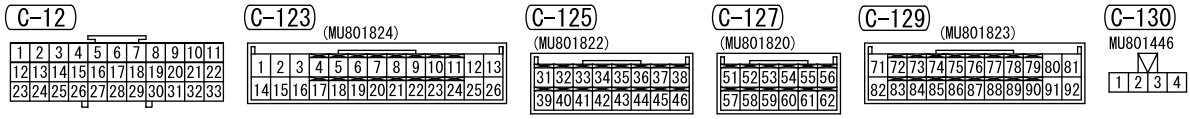

Wire colour code
B : Black LG : Light green G : Green L : Blue W : White Y : Yellow SB : Sky blue
BR : Brown O : Orange GR : Gray R : Red P : Pink V : Violet

H4J05E04BB

ENGINE CONTROL SYSTEM <4G6 (LHD)> (CONTINUED)

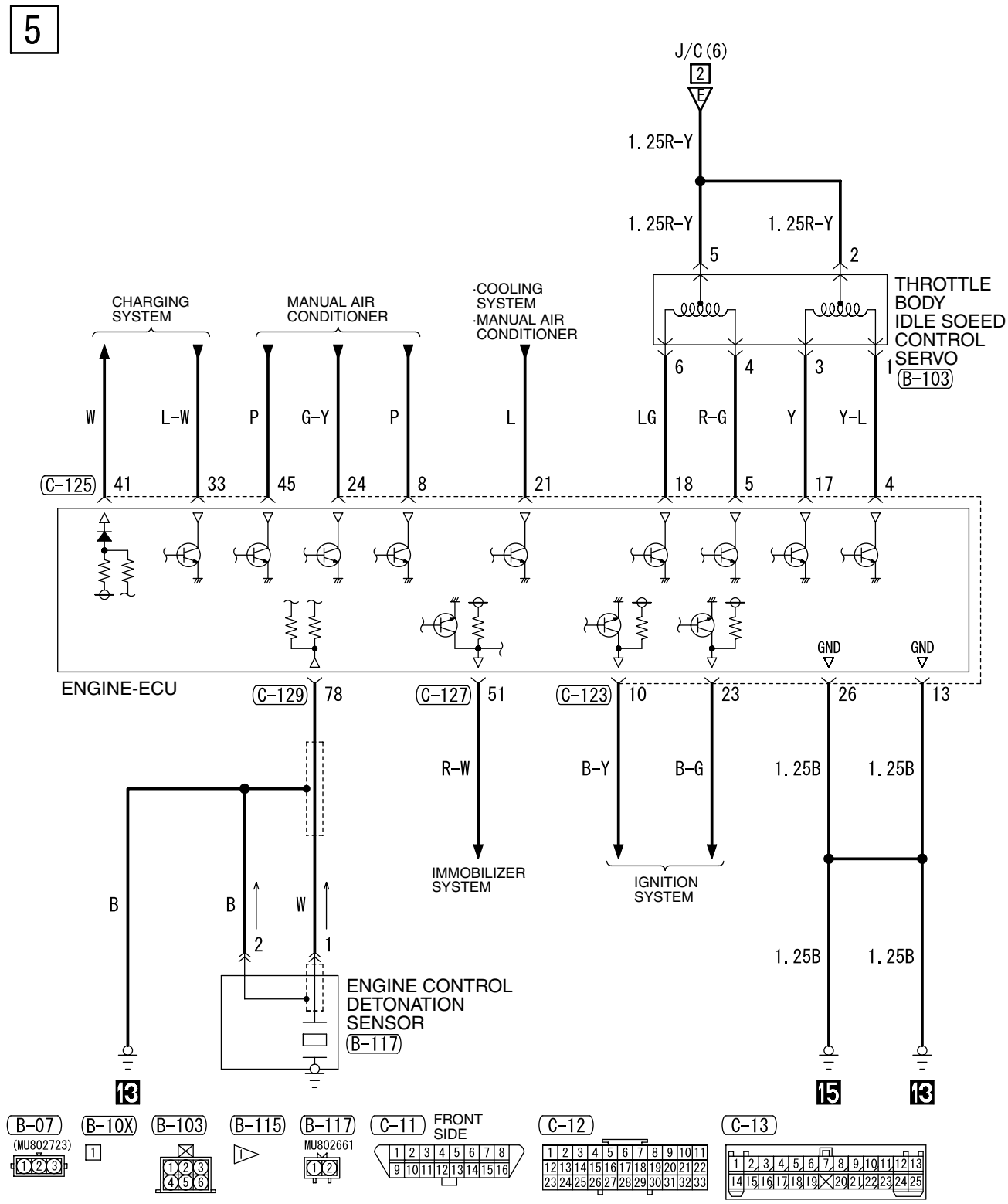

H4J05E04CA

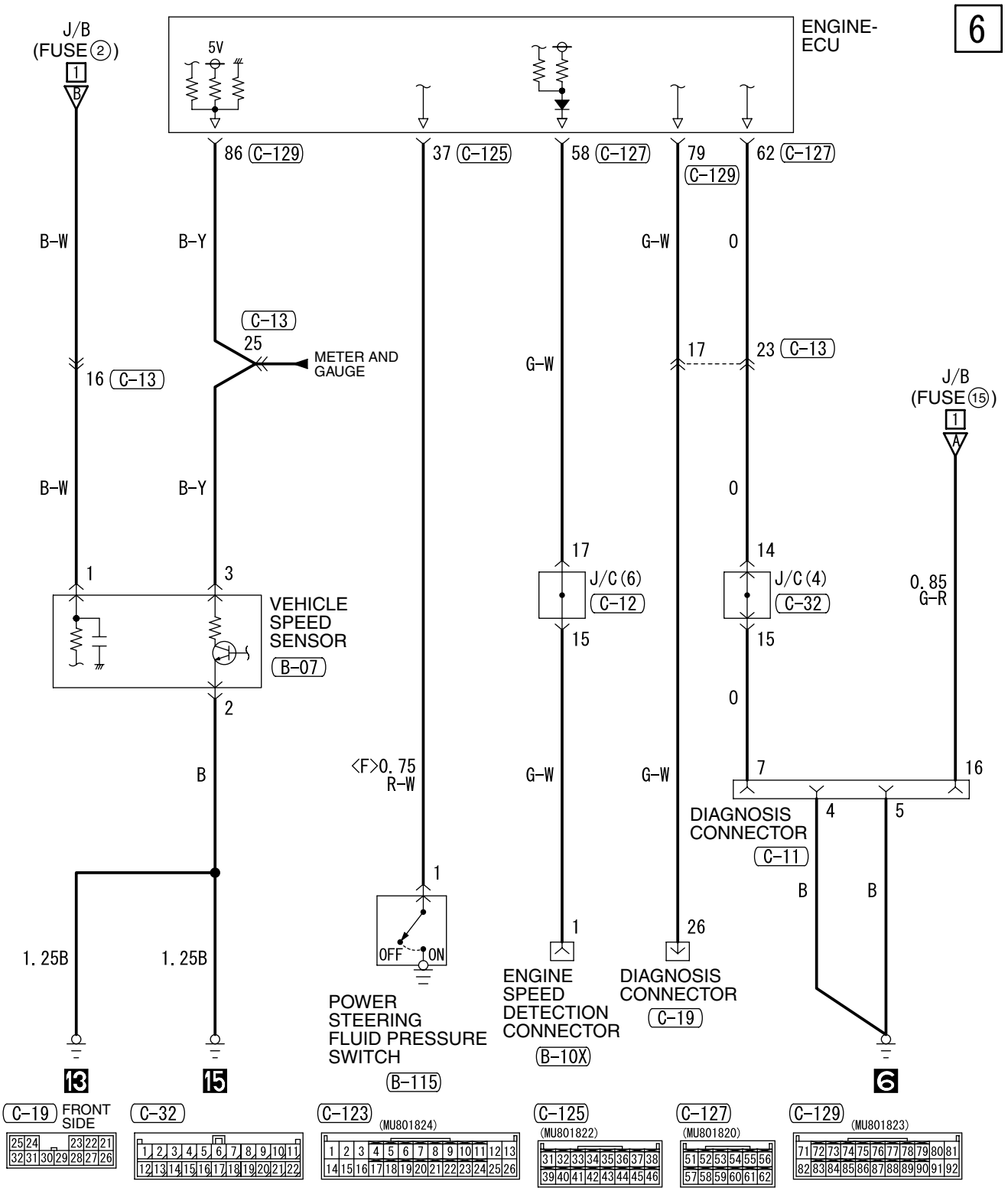

Wire colour code
B : Black LG : Light green G : Green L : Blue W : White Y : Yellow SB : Sky blue
BR : Brown O : Orange GR : Gray R : Red P : Pink V : Violet

H4J05E04CB

ENGINE CONTROL SYSTEM <4G6 (RHD)>

M1901000801472

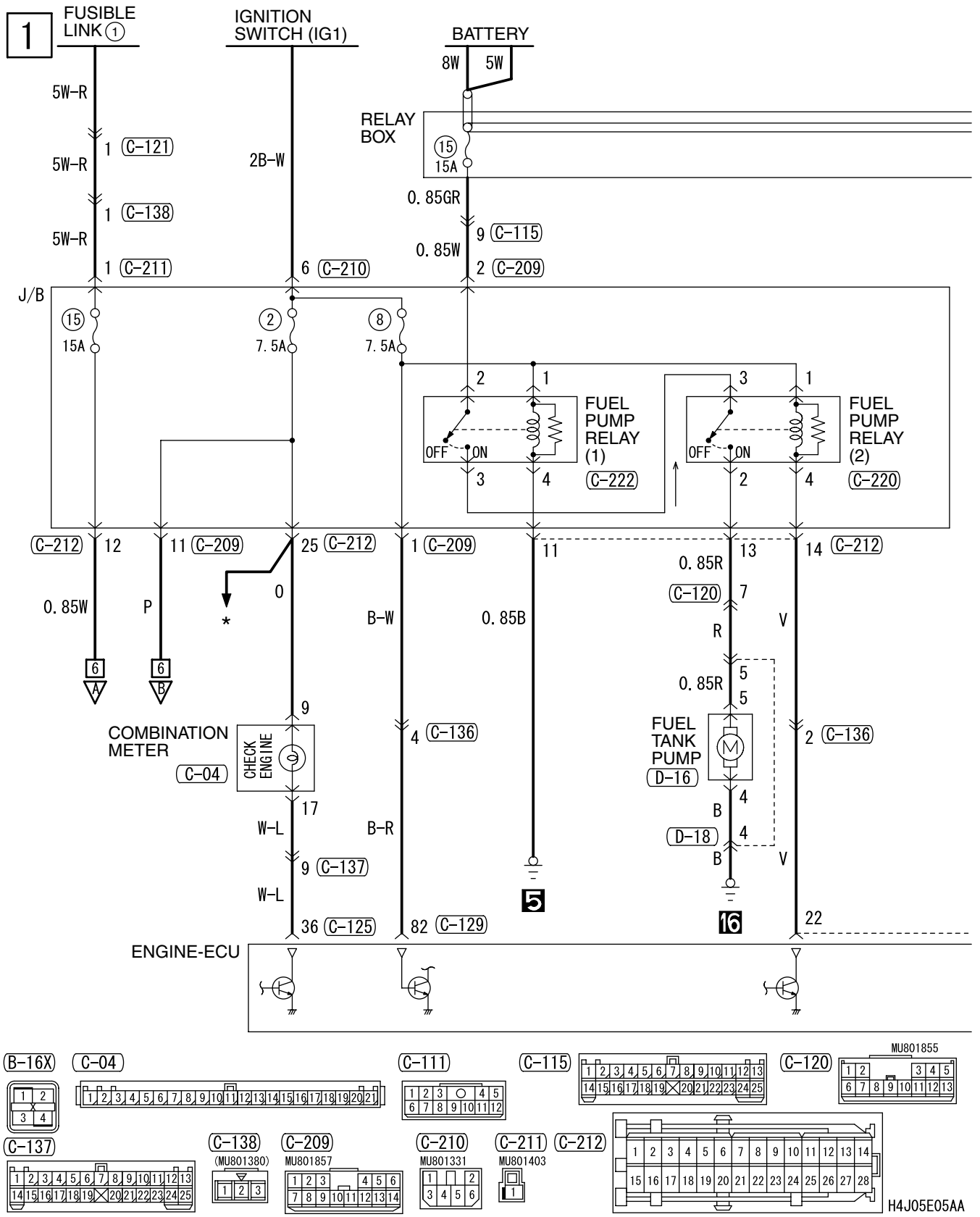

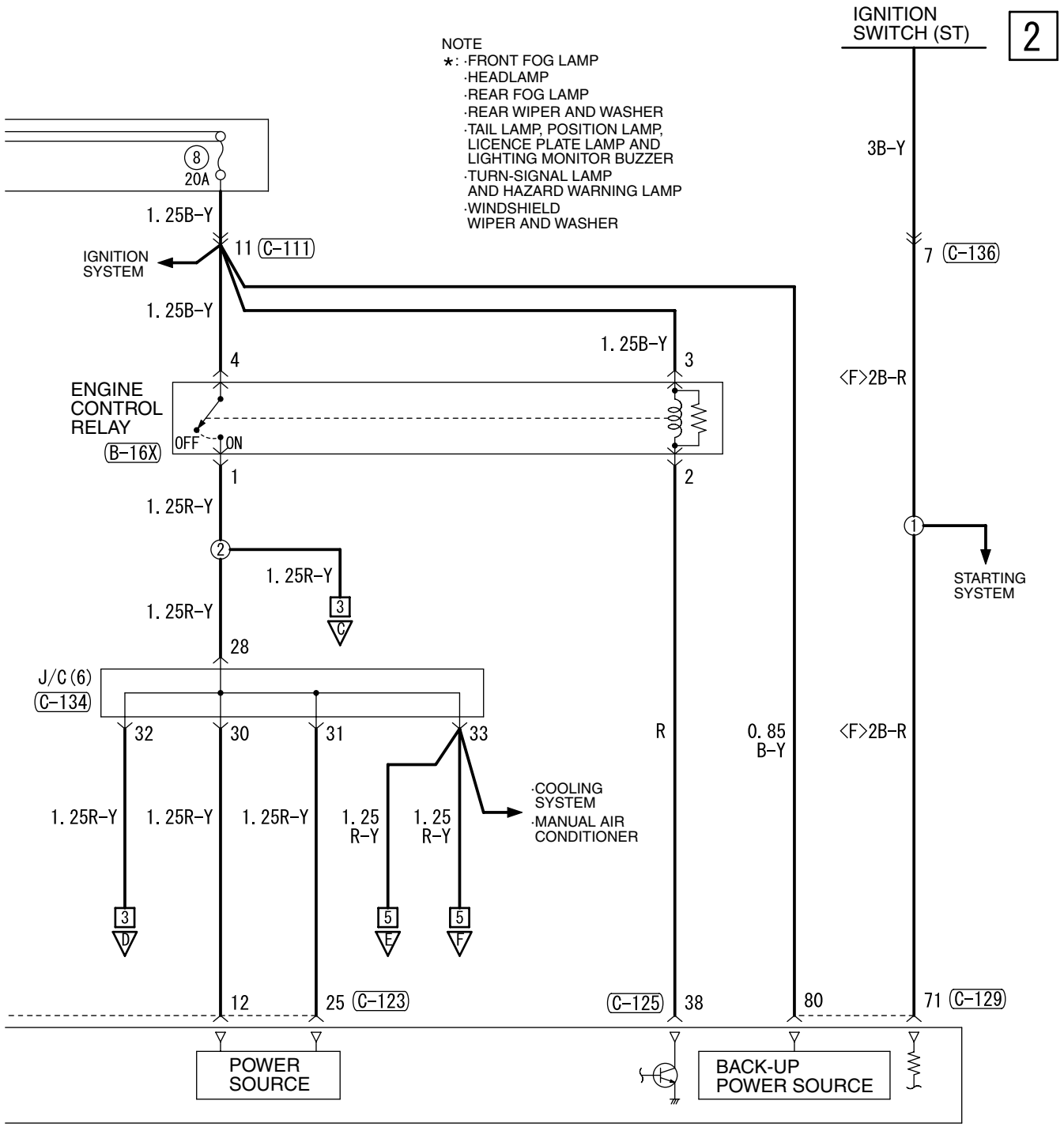

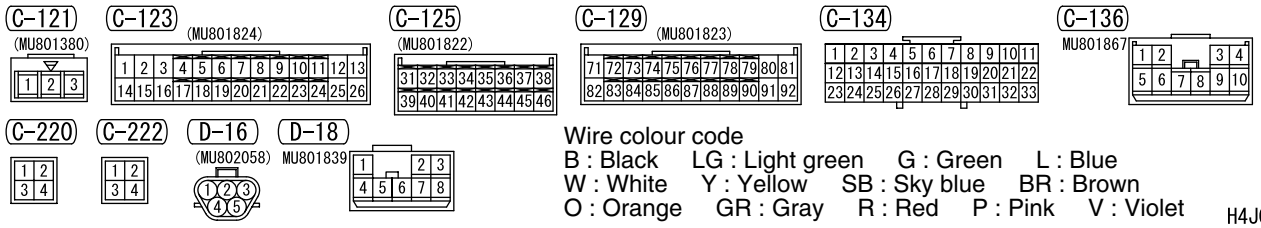

Wire colour code
B : Black LG : Light green G : Green L : Blue
W : White Y : Yellow SB : Sky blue BR : Brown
O : Orange GR : Gray R : Red P : Pink V : Violet

H4J05E05AB

ENGINE CONTROL SYSTEM <4G6 (RHD)> (CONTINUED)

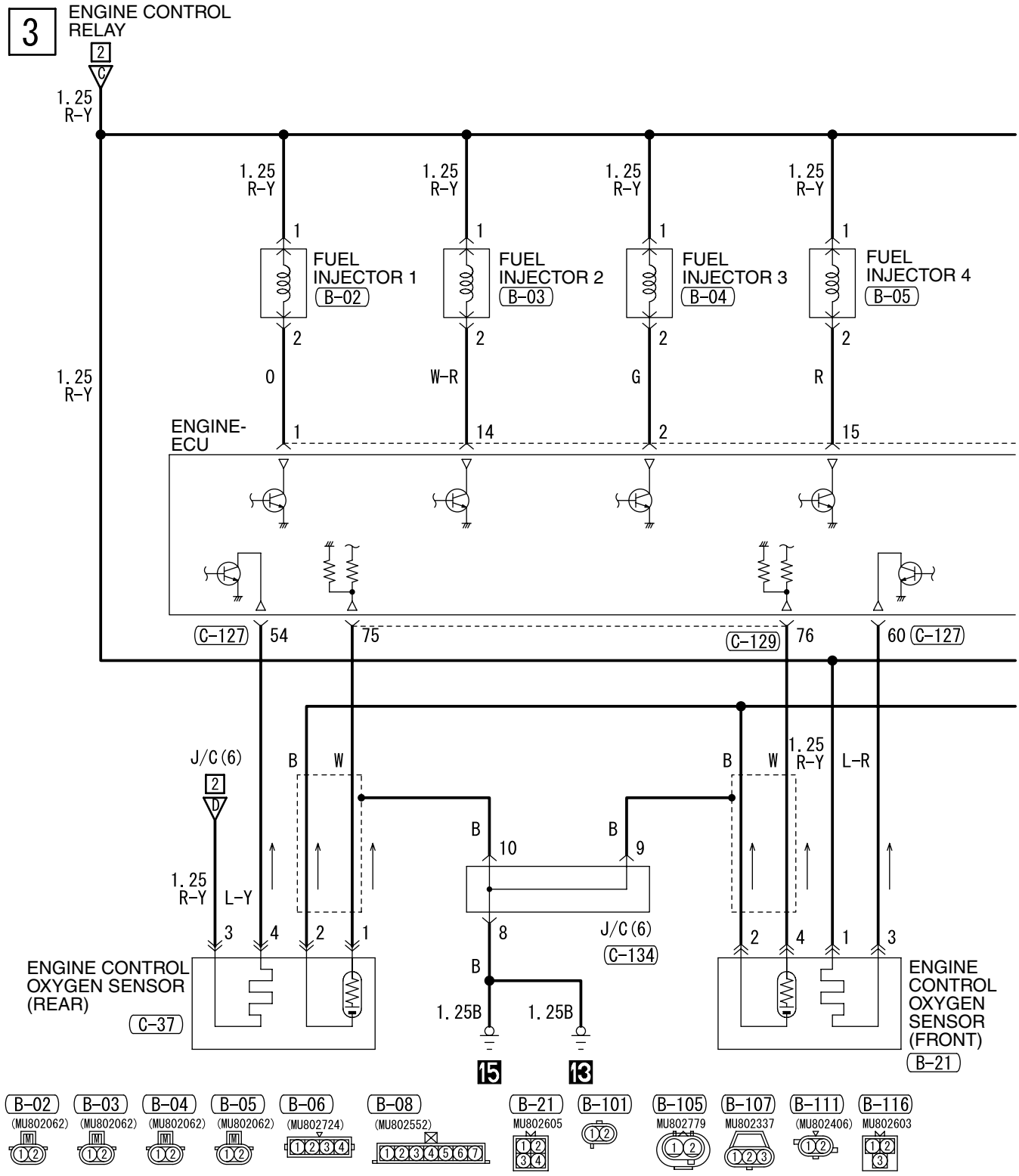

H4J05E05BA

4

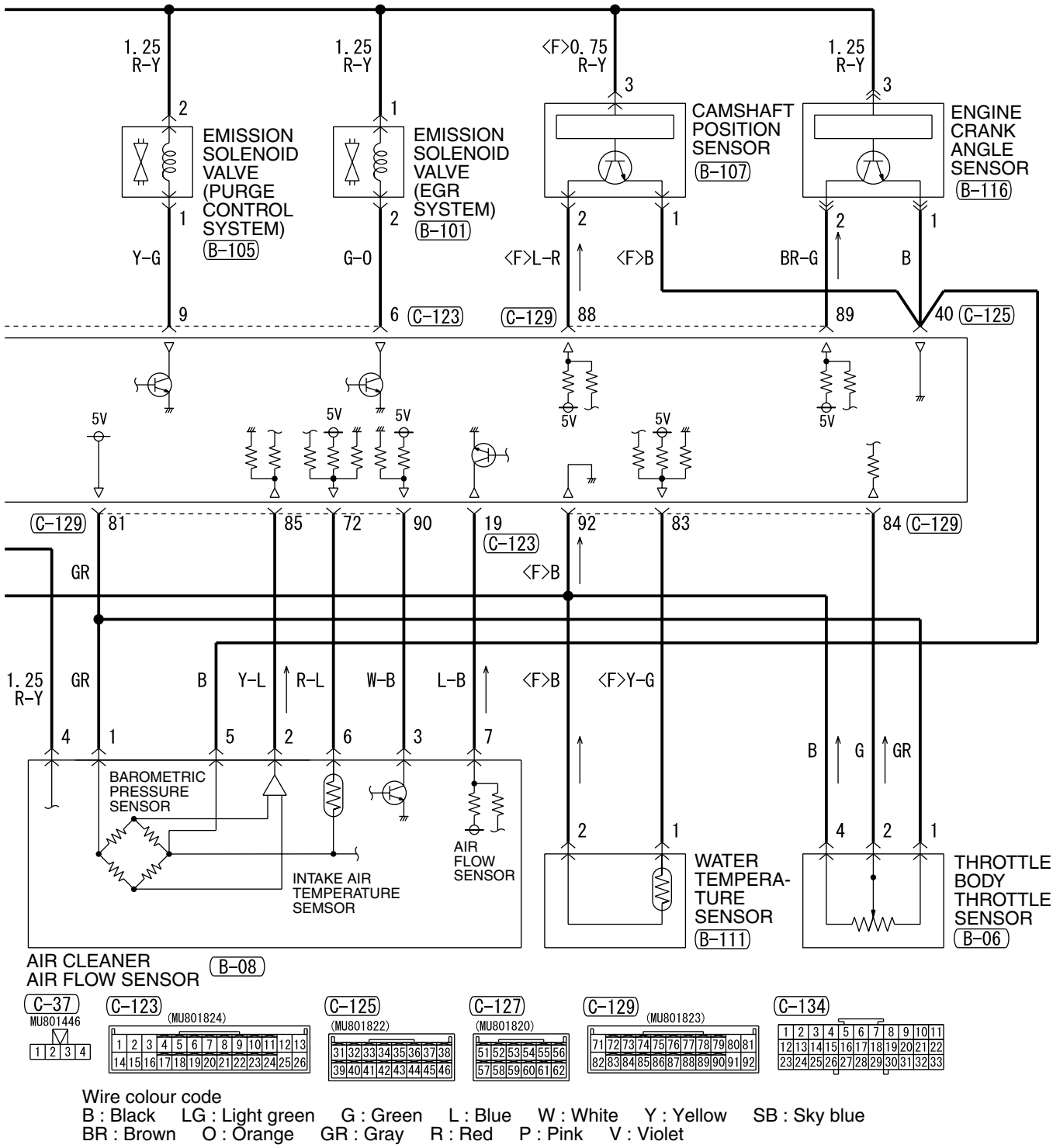

Wire colour code
B : Black LG : Light green G : Green L : Blue W : White Y : Yellow SB : Sky blue
BR : Brown O : Orange GR : Gray R : Red P : Pink V : Violet

H4J05E05BB

ENGINE CONTROL SYSTEM <4G6 (RHD)> (CONTINUED)

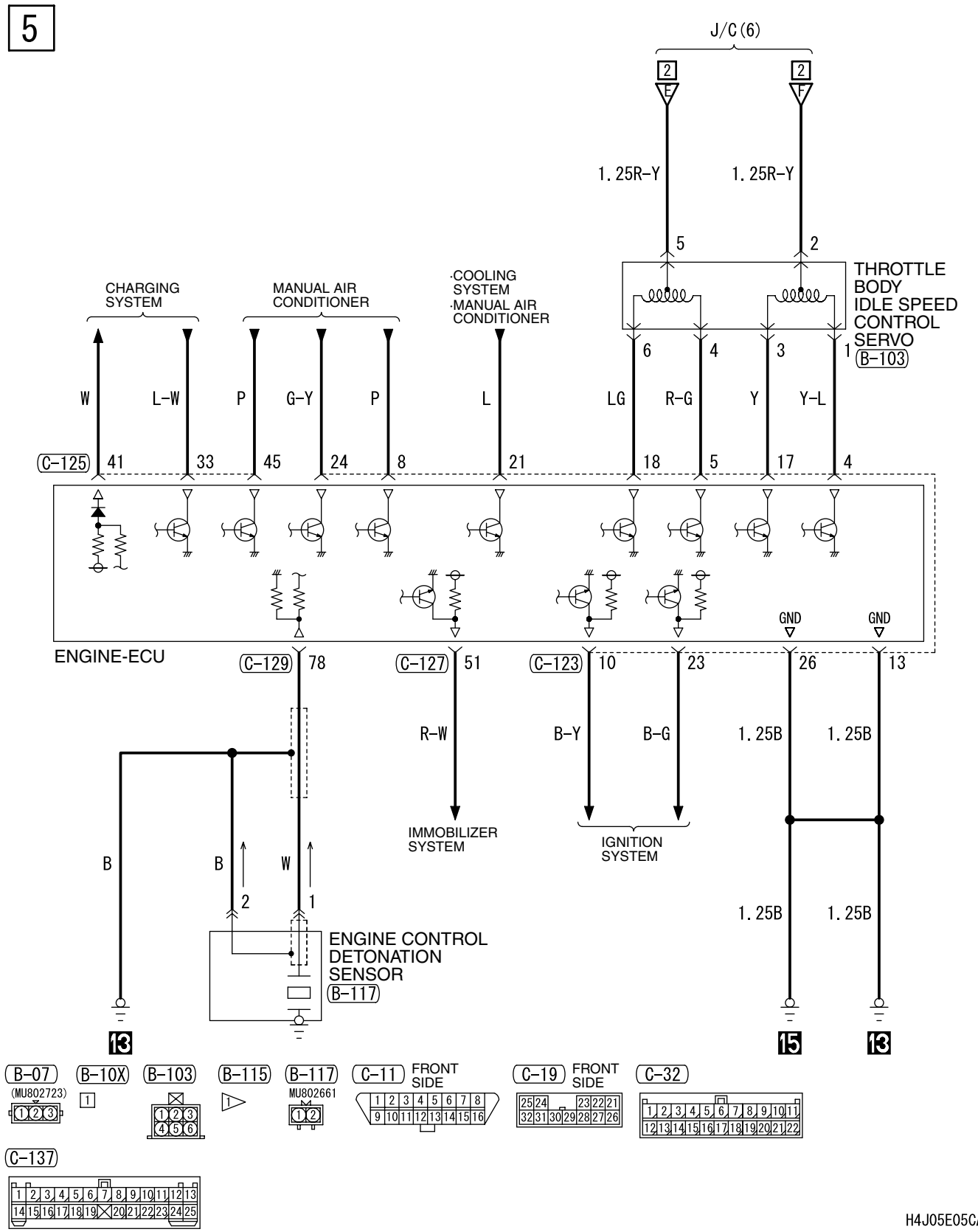

H4J05E05CA

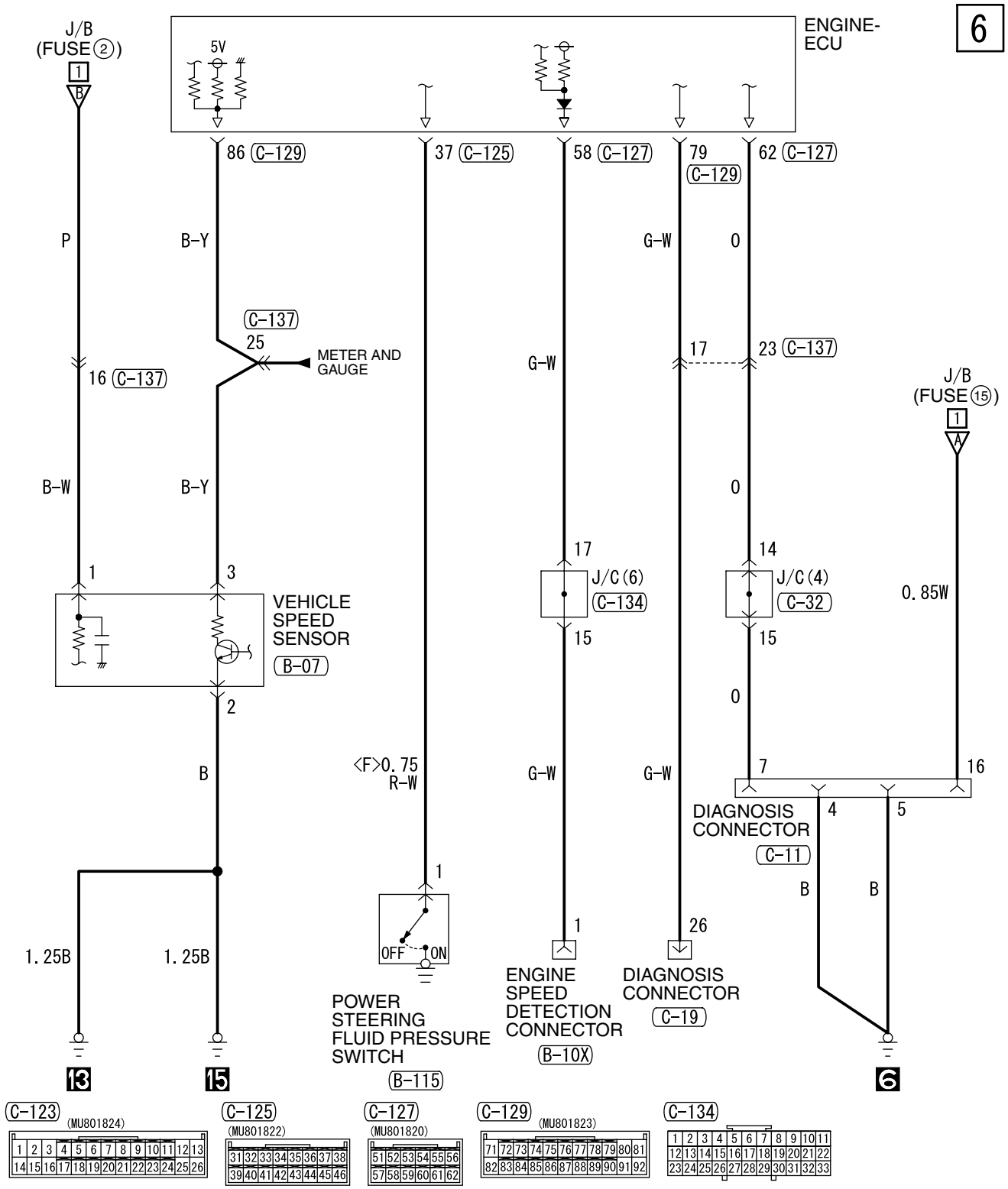

Wire colour code
B : Black LG : Light green G : Green L : Blue W : White Y : Yellow SB : Sky blue
BR : Brown O : Orange GR : Gray R : Red P : Pink V : Violet

H4J05E05CB

COOLING SYSTEM <LHD>

M1901001000539

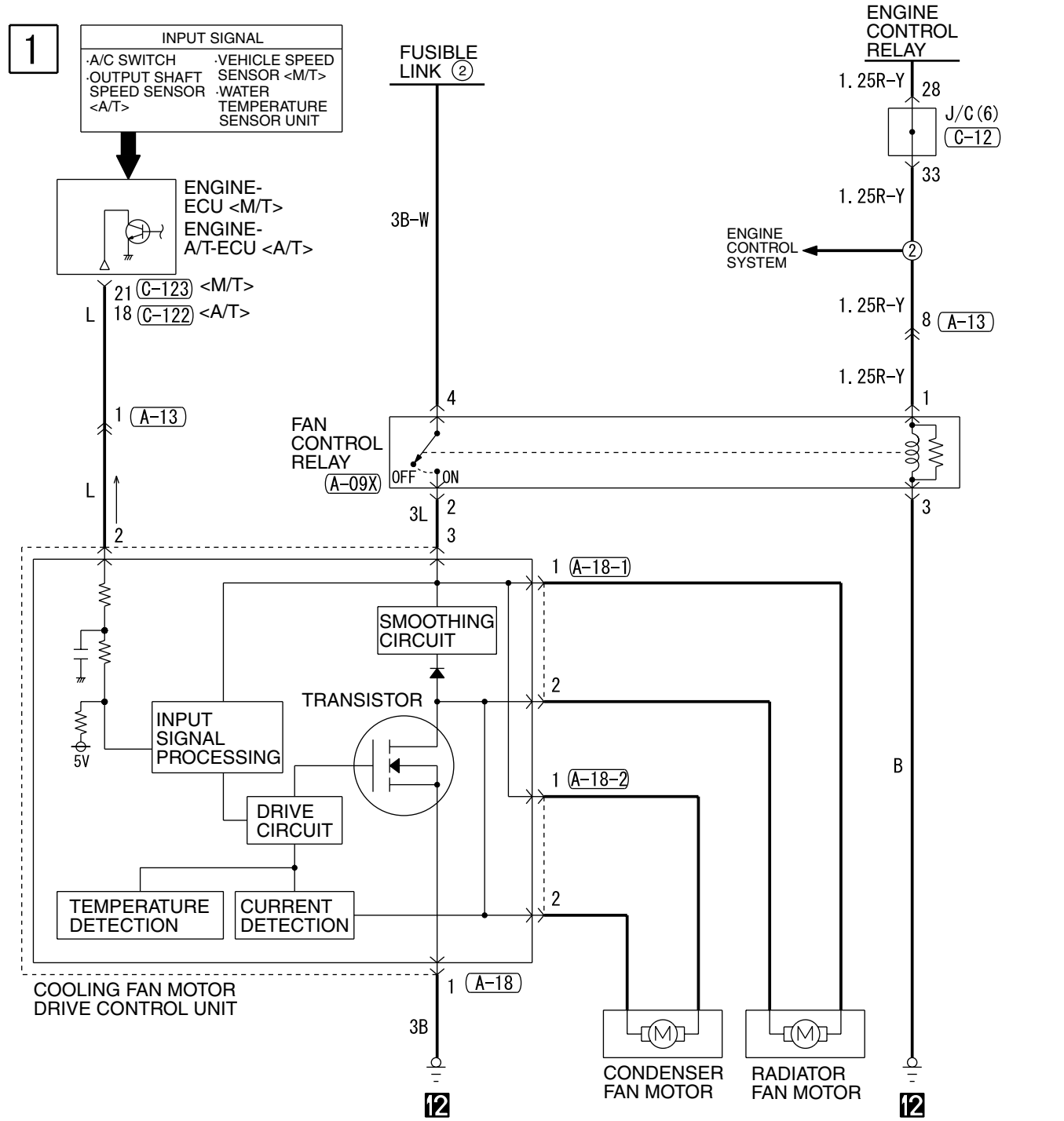

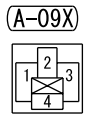

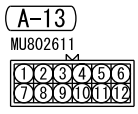

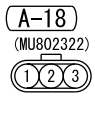

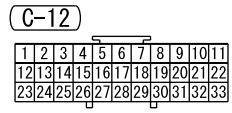

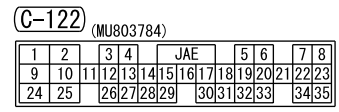

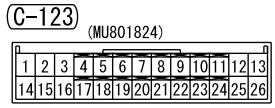

Wire colour code
B : Black LG : Light green G : Green L : Blue
W : White Y : Yellow SB : Sky blue BR : Brown
O : Orange GR : Gray R : Red P : Pink V : Violet

H4J06E00AA

COOLING SYSTEM <RHD>

M1901001000540

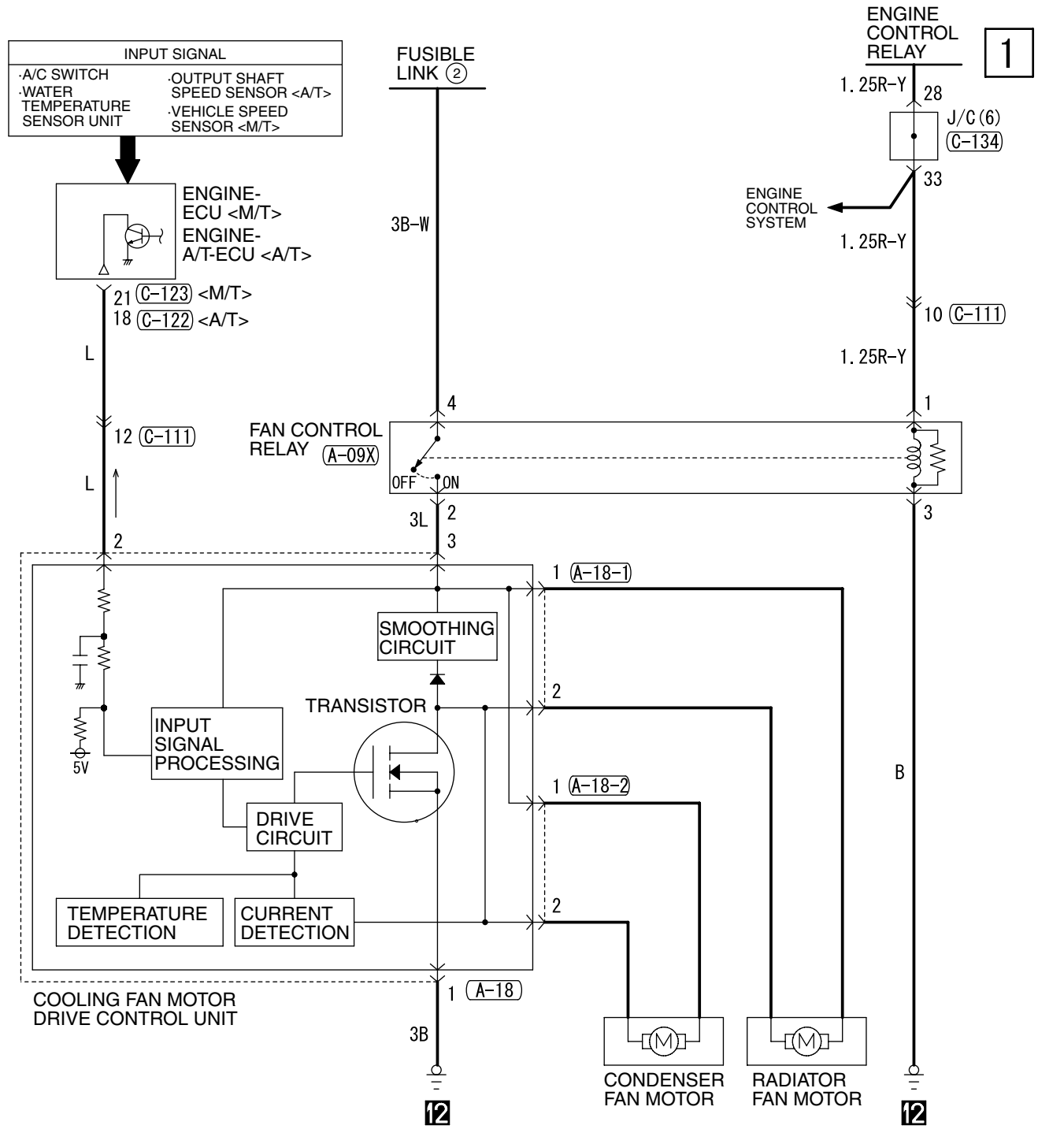

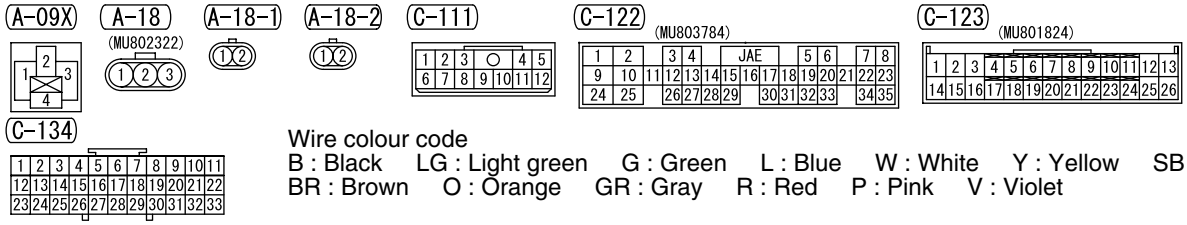

Wire colour code
B : Black LG : Light green G : Green L : Blue W : White Y : Yellow SB : Sky blue
BR : Brown O : Orange GR : Gray R : Red P : Pink V : Violet

H4J06E01AA

INVECS-II 4A/T <LHD>

M1901016200830

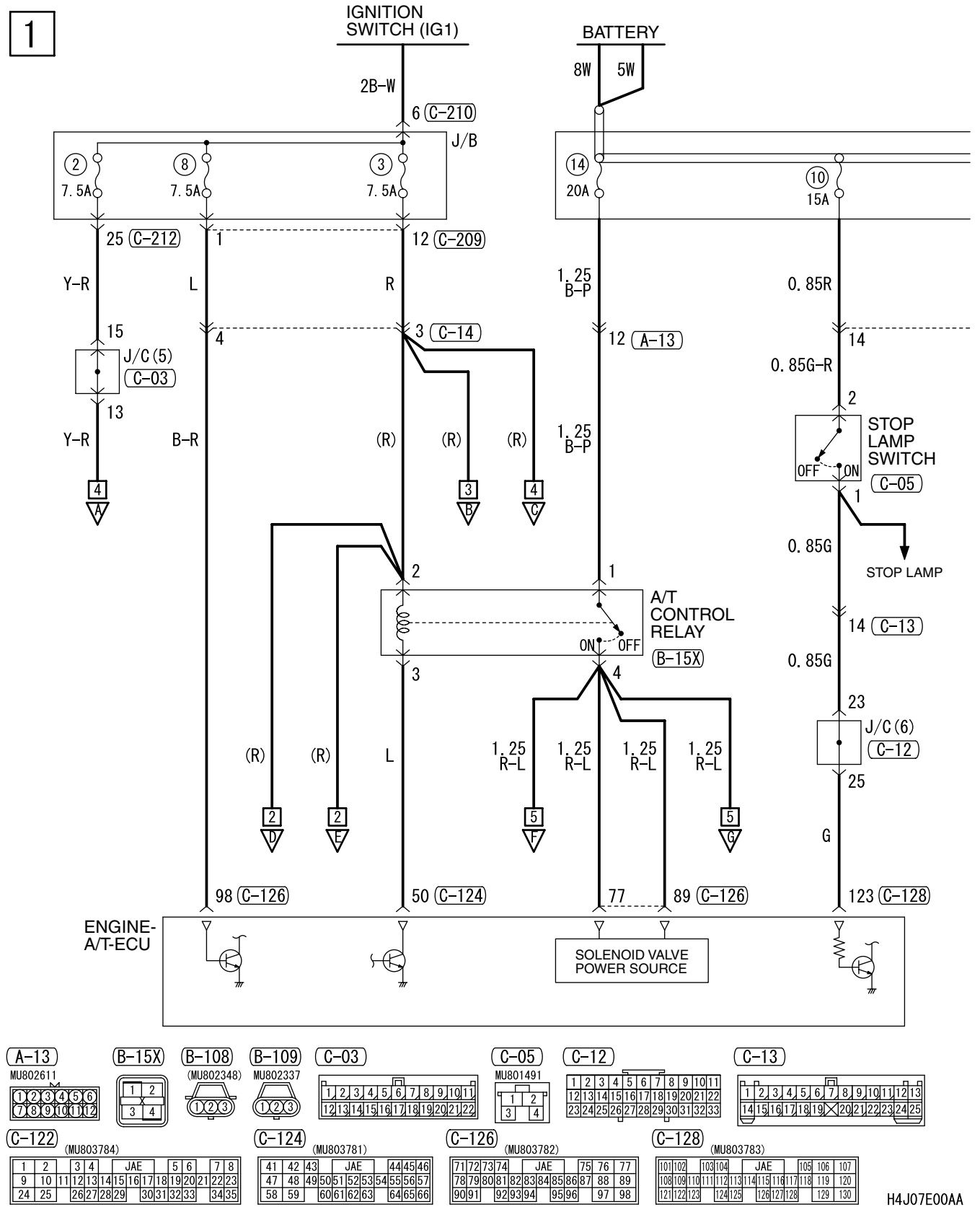

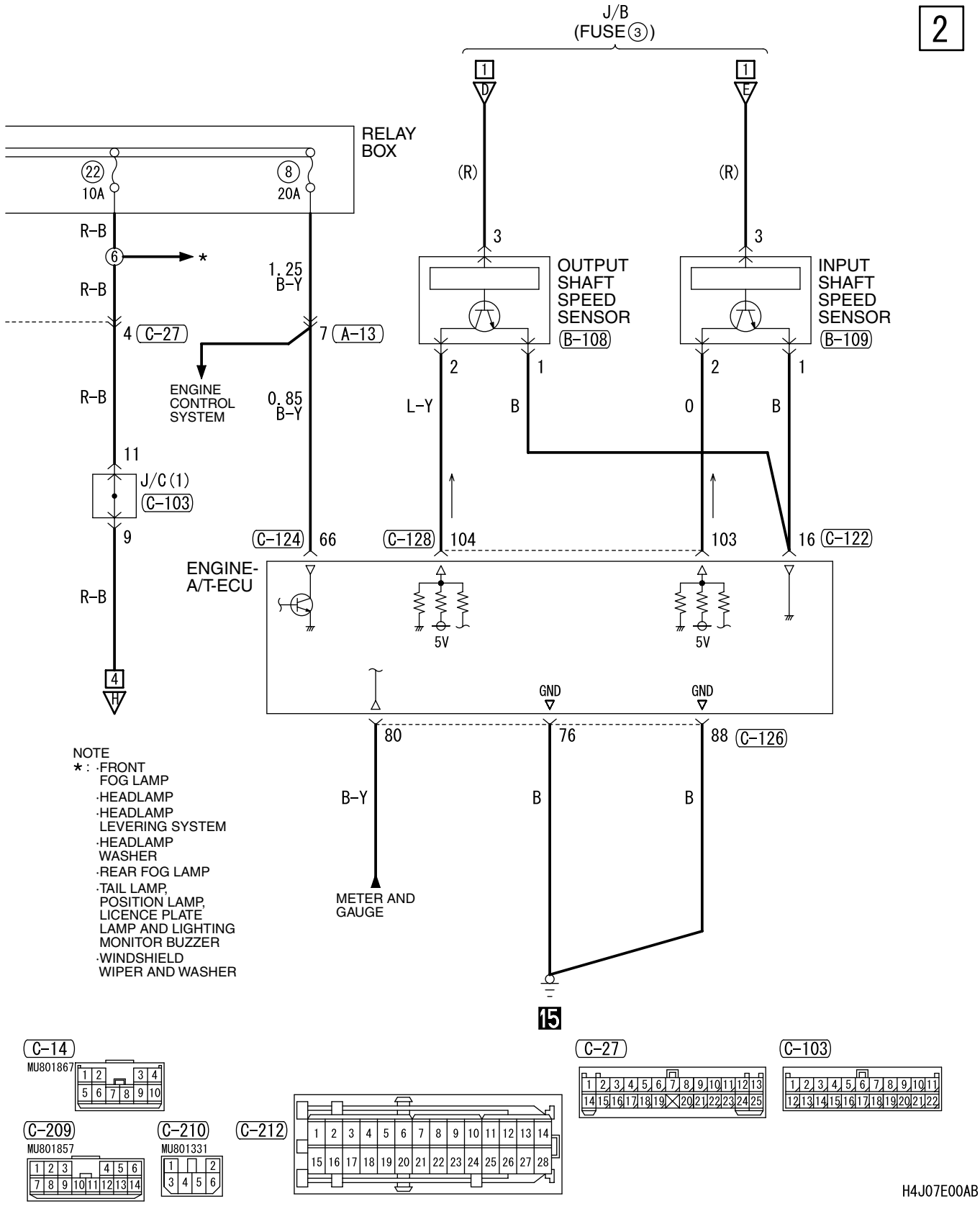
2
J/B
(FUSE③)
RELAY BOX
22
10A
8
20A
R-B
6
*
1.25
B-Y
R-B
4 C-27
7 A-13
ENGINE CONTROL SYSTEM
R-B
0.85
B-Y
11
J/C(1)
C-103
9
R-B
4
H
(R)
(R)
3
3
OUTPUT SHAFT SPEED SENSOR
B-108
INPUT SHAFT SPEED SENSOR
B-109
2
1
2
1
L-Y
B
0
B
C-124 66
C-128 104
103
16 C-122
ENGINE-A/T-ECU
5V
5V
GND
GND
80
76
88 C-126
B-Y
B
B
METER AND GAUGE
NOTE
*: ·FRONT FOG LAMP
·HEADLAMP
·HEADLAMP LEVERING SYSTEM
·HEADLAMP WASHER
·REAR FOG LAMP
·TAIL LAMP, POSITION LAMP, LICENCE PLATE LAMP AND LIGHTING MONITOR BUZZER
·WINDSHIELD WIPER AND WASHER
15
C-14
MU801867
C-27
C-103
C-209
MU801857
C-210
MU801331
C-212
H4J07E00AB

INVECS-II 4A/T <LHD> (CONTINUED)

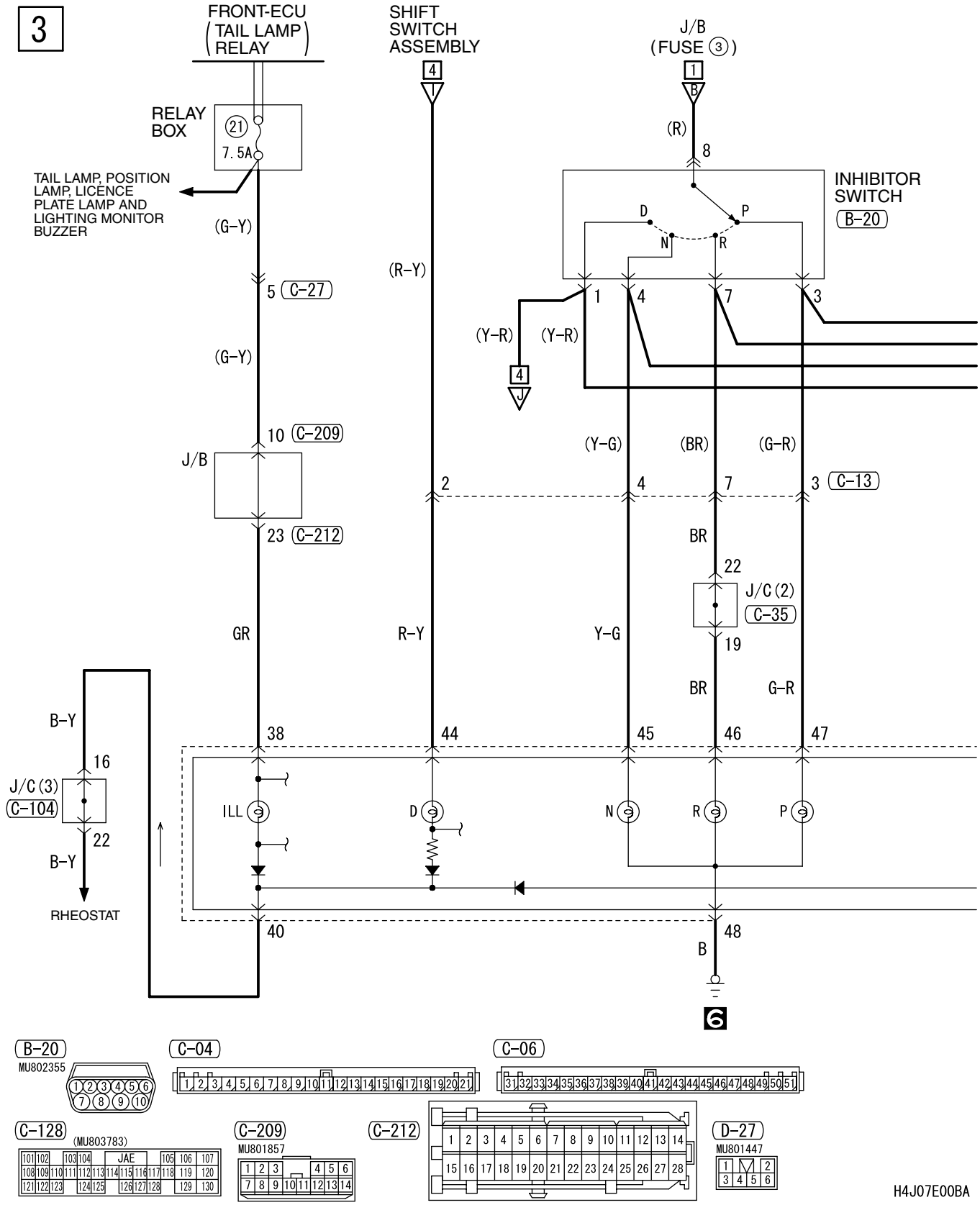

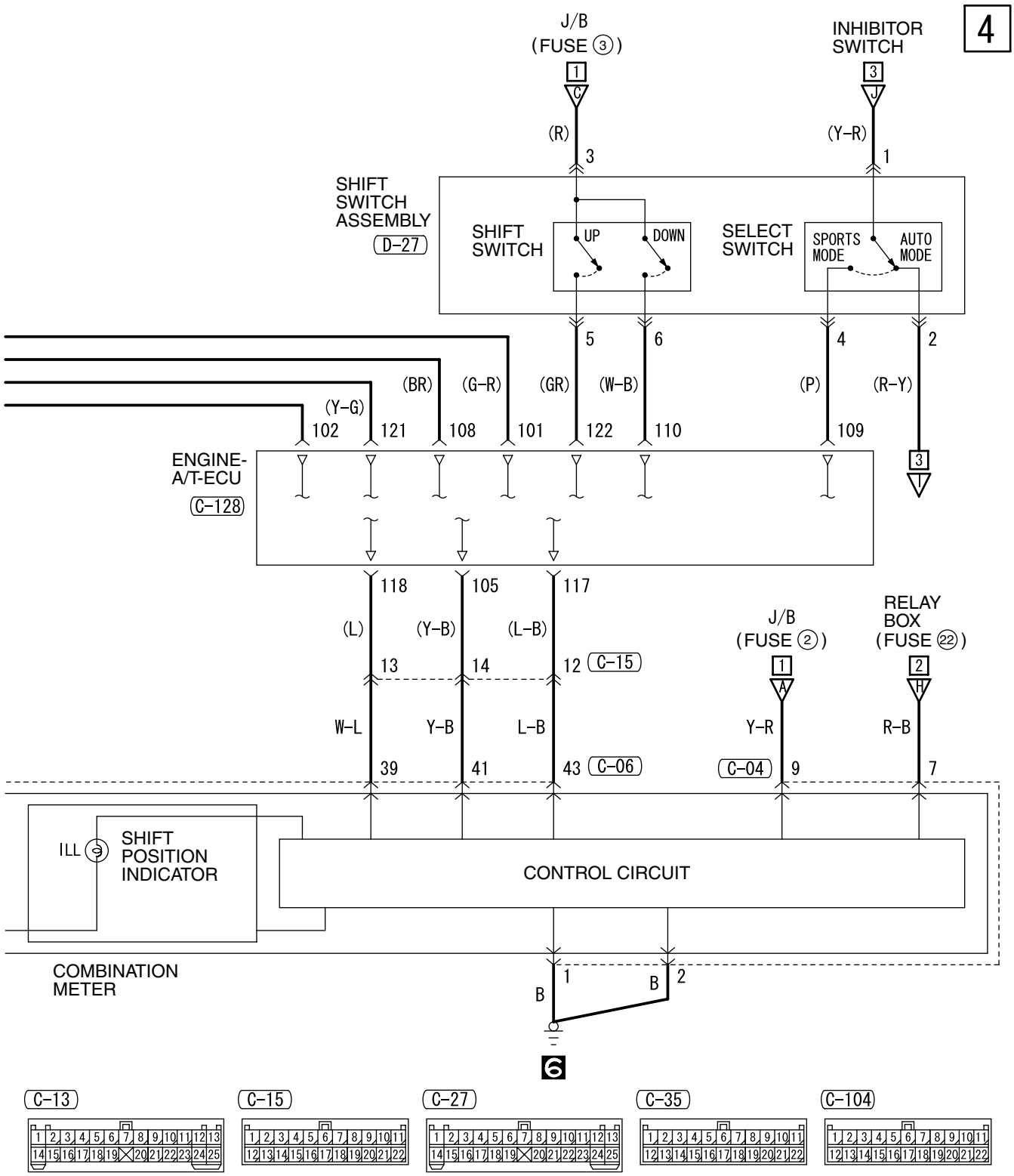

Wire colour code
B : Black LG : Light green G : Green L : Blue W : White Y : Yellow SB : Sky blue
BR : Brown O : Orange GR : Gray R : Red P : Pink V : Violet

H4J07E00BB

INVECS-II 4A/T <LHD> (CONTINUED)

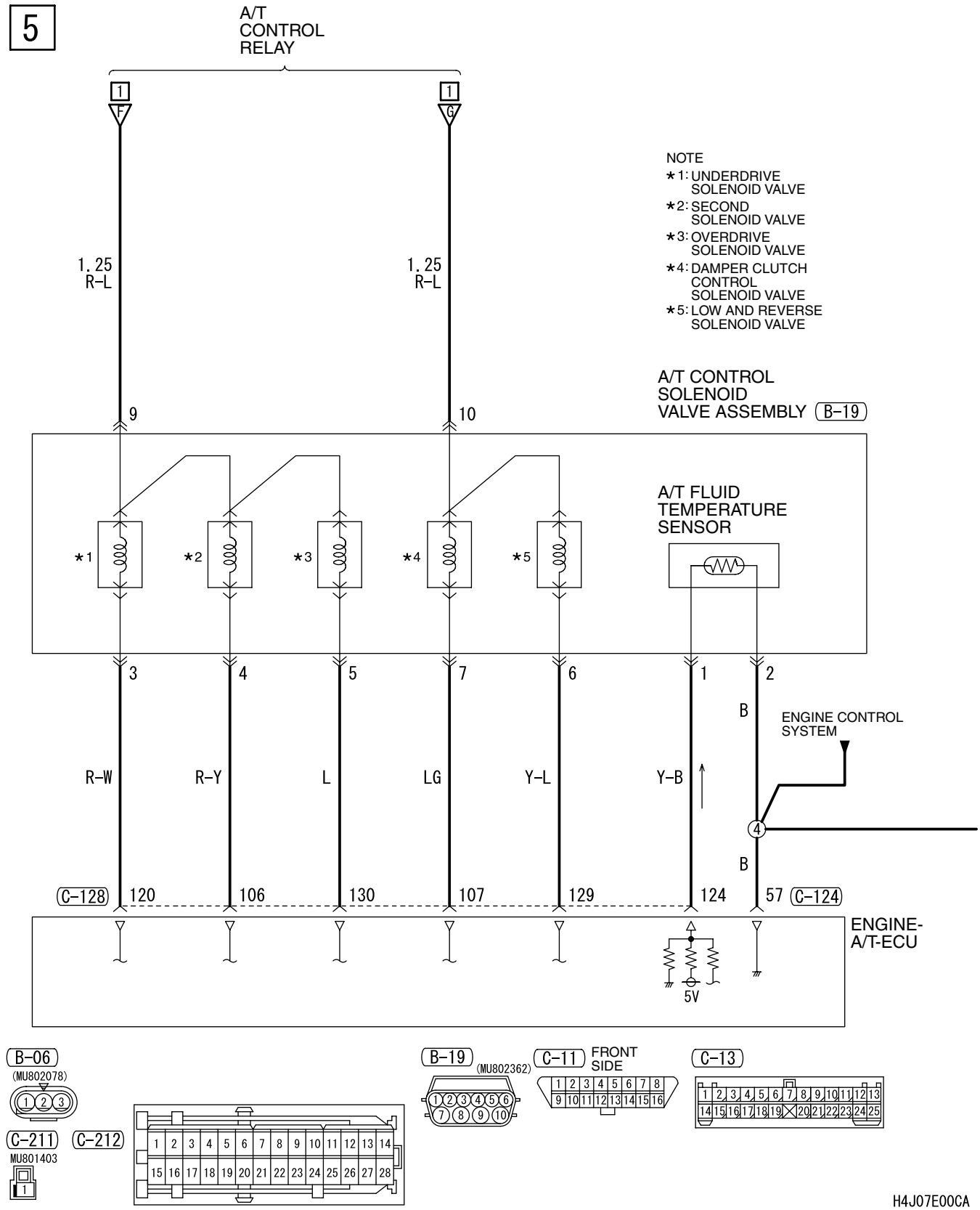

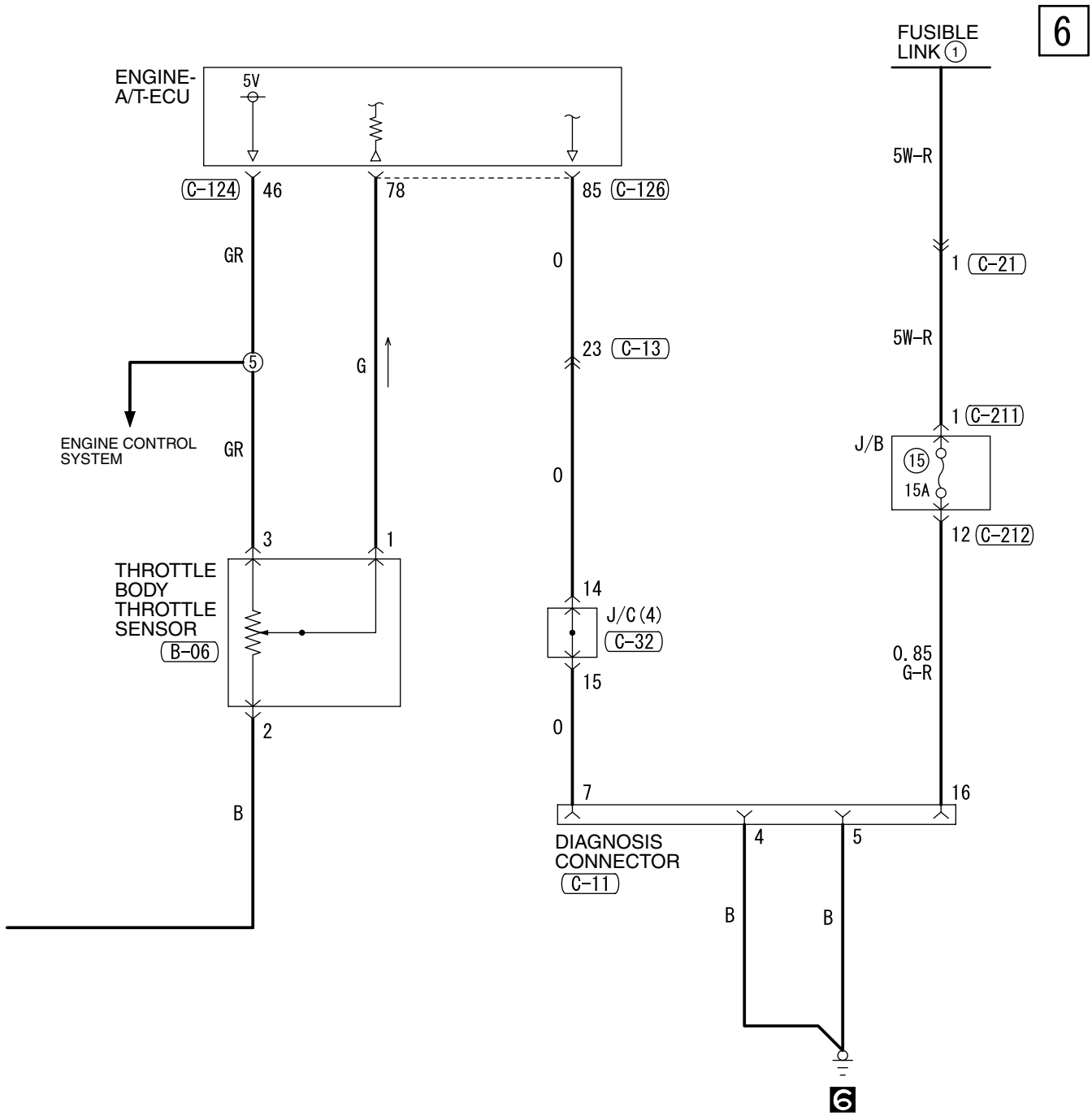

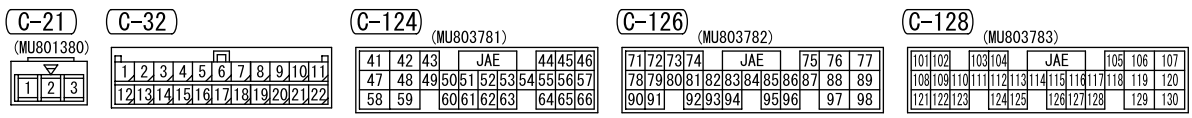

Wire colour code
B : Black LG : Light green G : Green L : Blue W : White Y : Yellow SB : Sky blue
BR : Brown O : Orange GR : Gray R : Red P : Pink V : Violet

H4J07E00CB

INVECS-II 4A/T <RHD>

M1901016200841

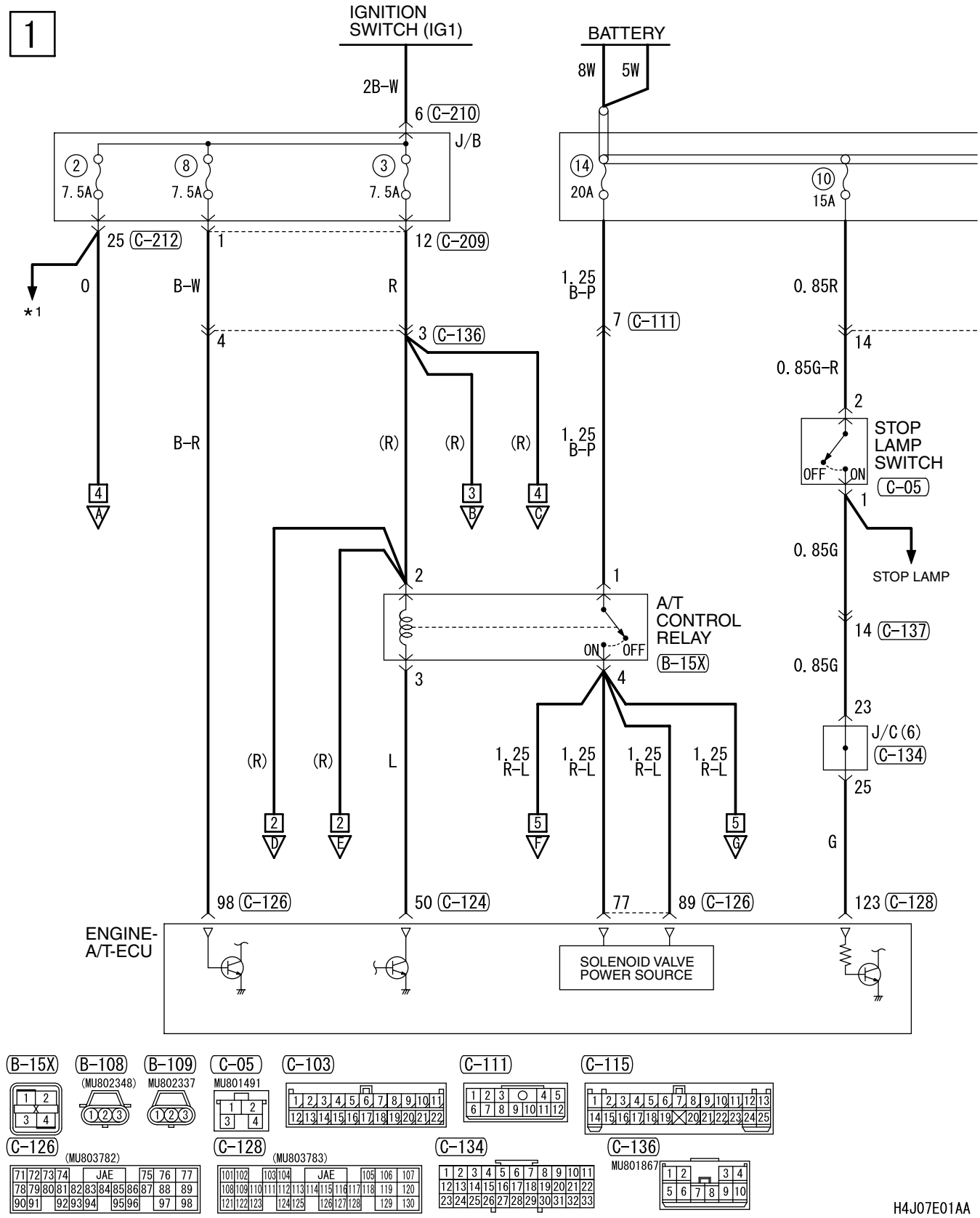

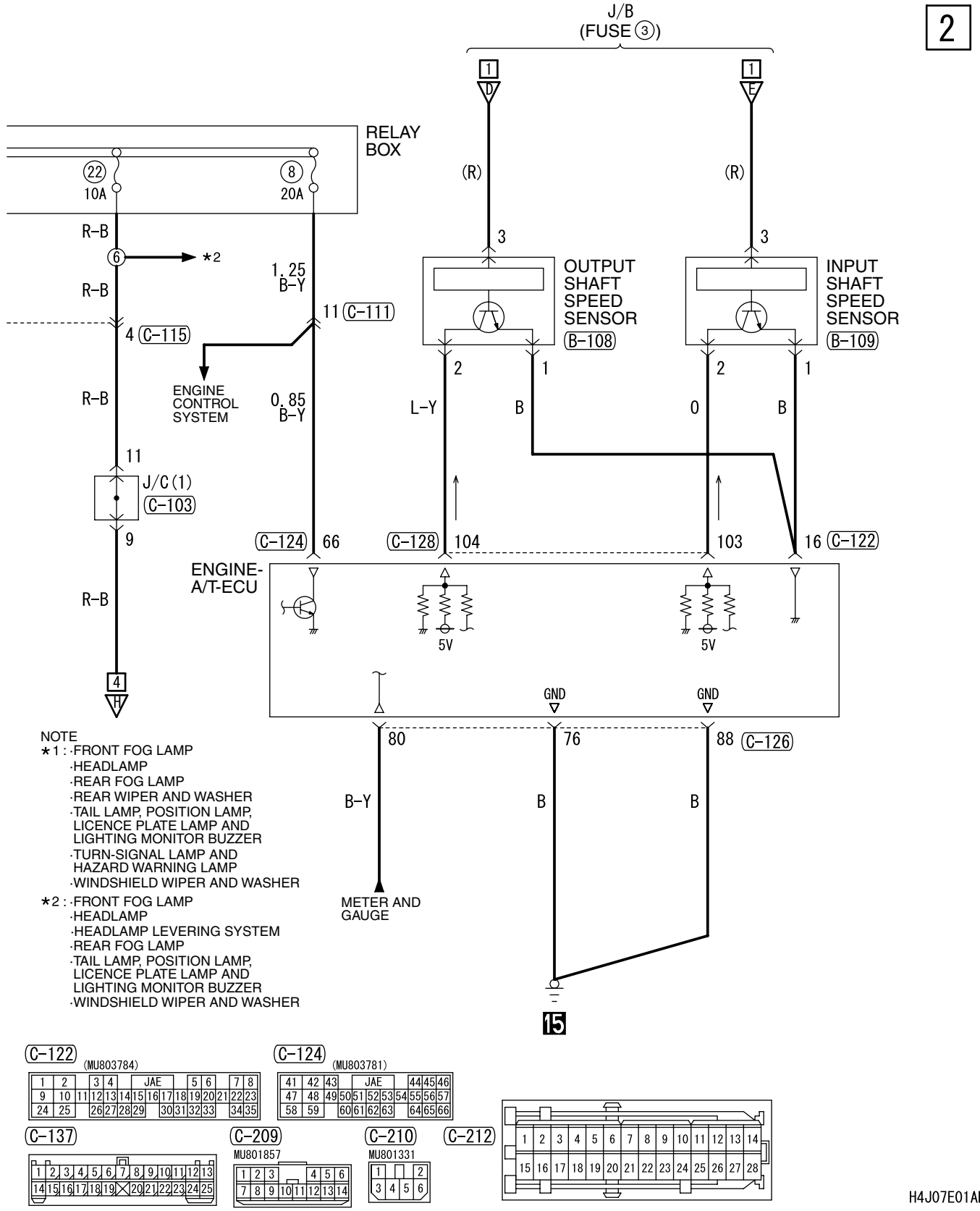

NOTE
*1 : ·FRONT FOG LAMP
·HEADLAMP
·REAR FOG LAMP
·REAR WIPER AND WASHER
·TAIL LAMP, POSITION LAMP, LICENCE PLATE LAMP AND LIGHTING MONITOR BUZZER
·TURN-SIGNAL LAMP AND HAZARD WARNING LAMP
·WINDSHIELD WIPER AND WASHER

*2 : ·FRONT FOG LAMP
·HEADLAMP
·HEADLAMP LEVERING SYSTEM
·REAR FOG LAMP
·TAIL LAMP, POSITION LAMP, LICENCE PLATE LAMP AND LIGHTING MONITOR BUZZER
·WINDSHIELD WIPER AND WASHER

H4J07E01AB

INVECS-II 4A/T <RHD> (CONTINUED)

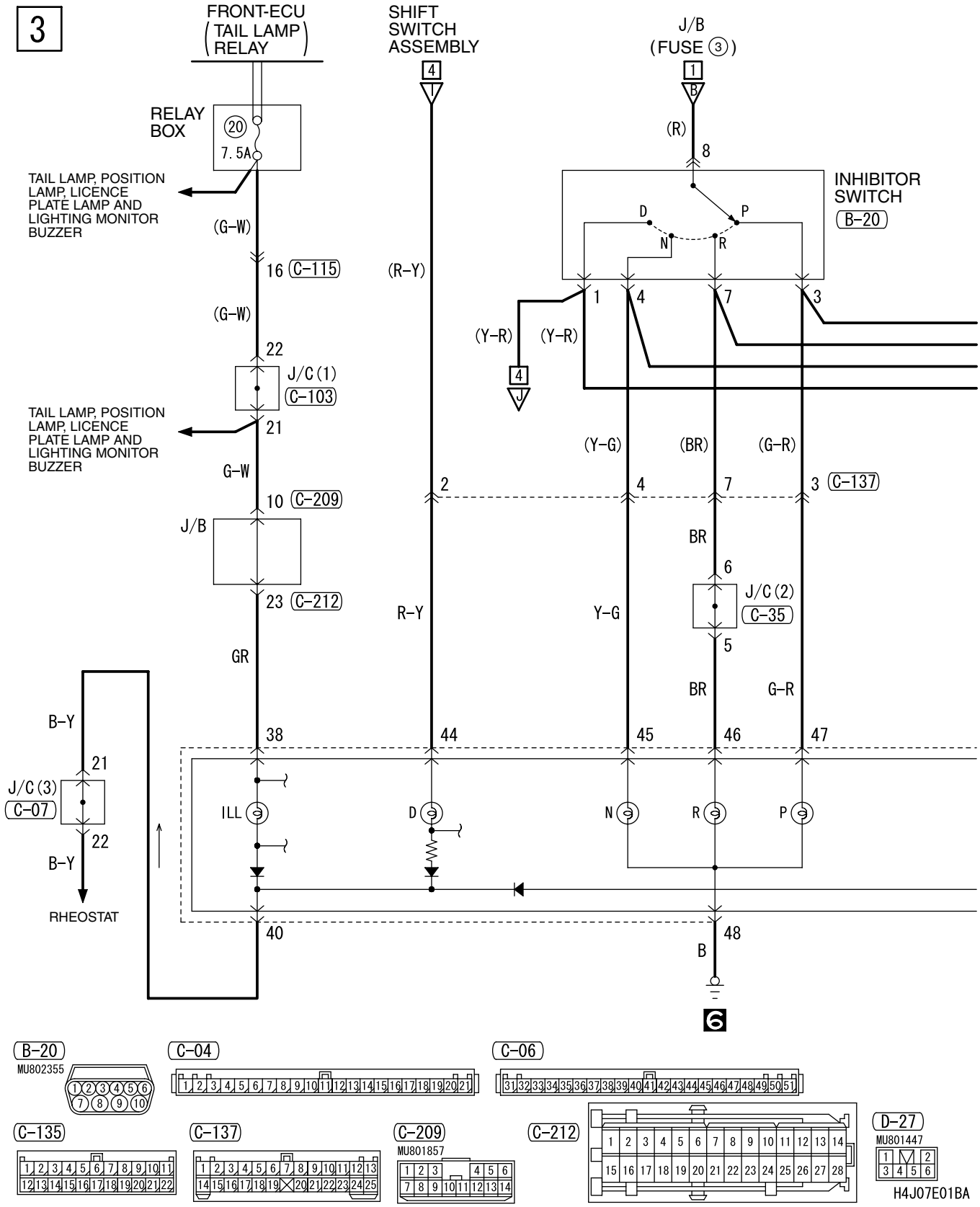

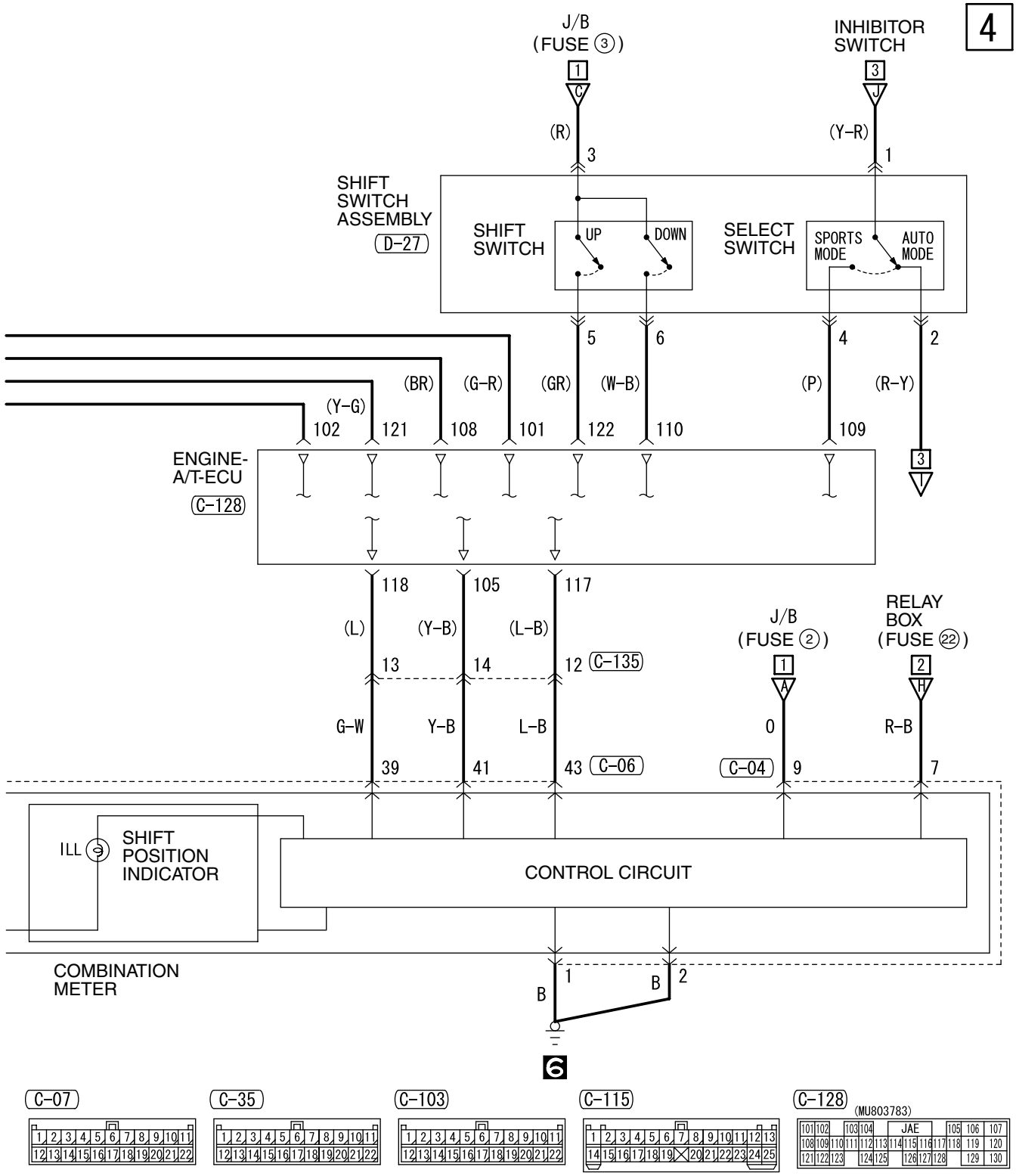

Wire colour code
B : Black LG : Light green G : Green L : Blue W : White Y : Yellow SB : Sky blue
BR : Brown O : Orange GR : Gray R : Red P : Pink V : Violet

H4J07E01BB

INVECS-II 4A/T <RHD> (CONTINUED)

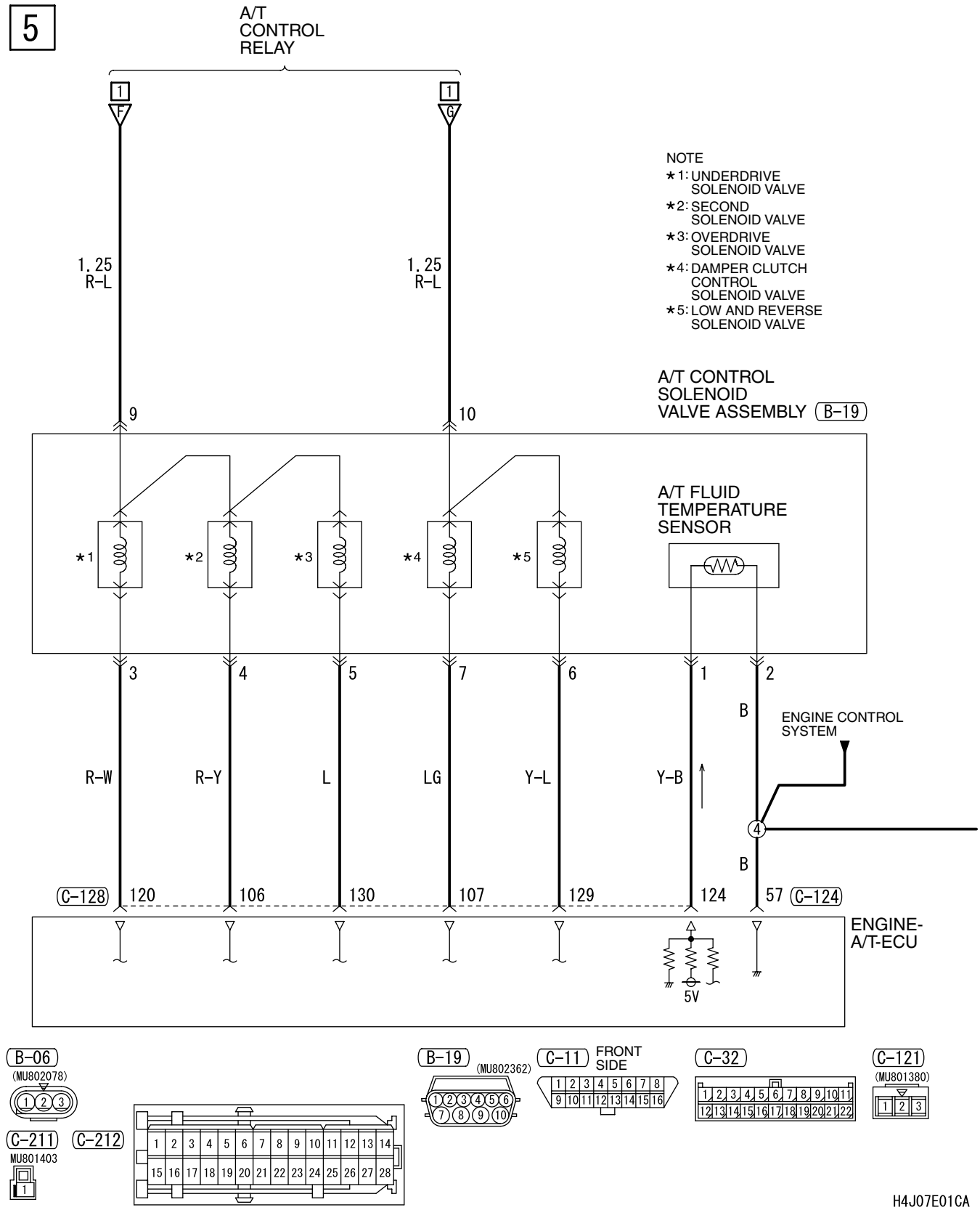

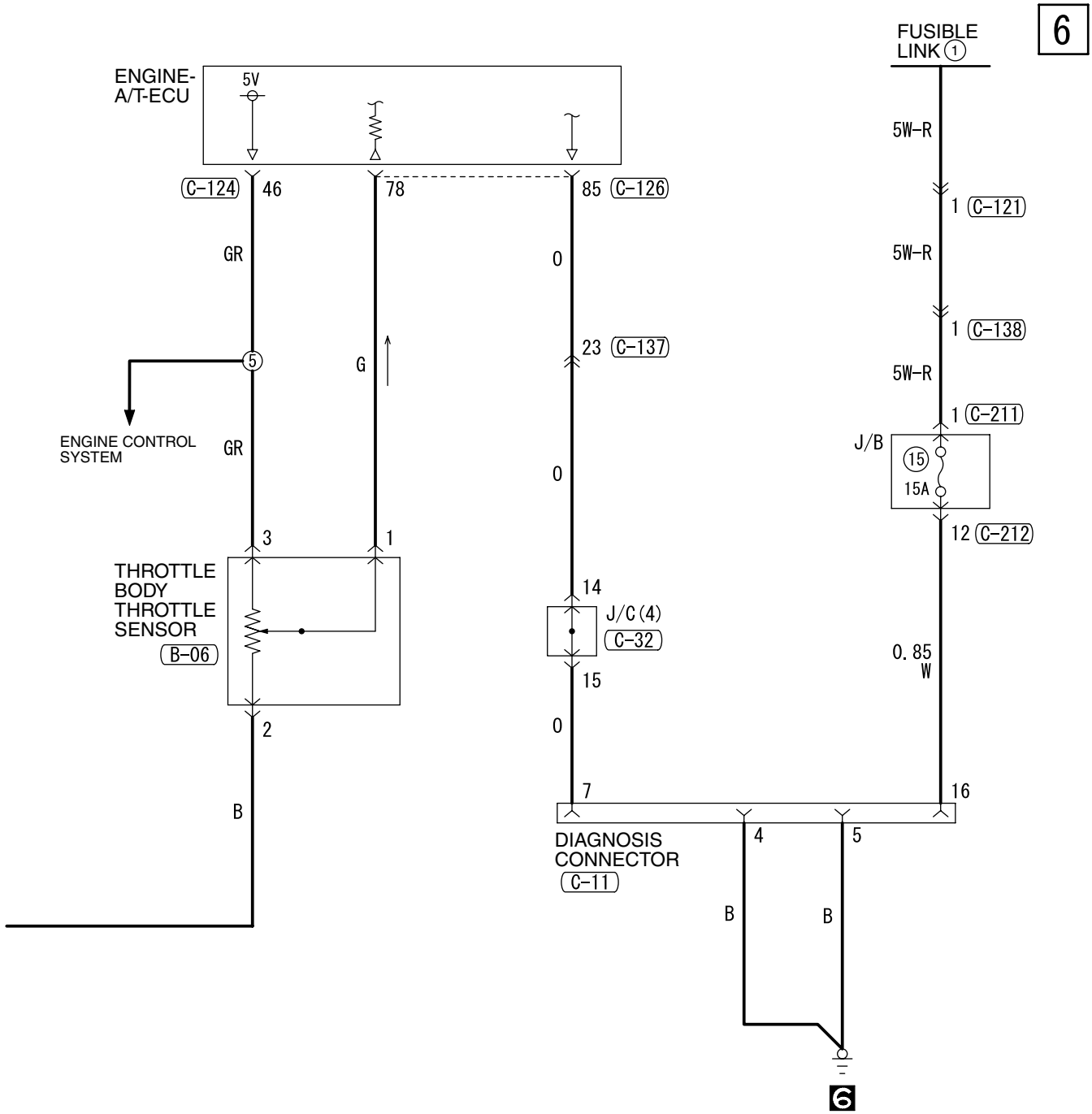

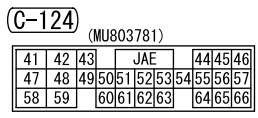

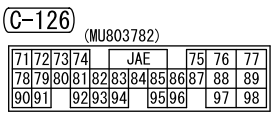

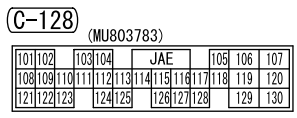

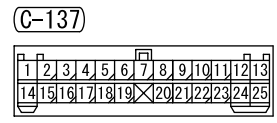

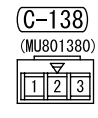

Wire colour code
B : Black LG : Light green G : Green L : Blue W : White Y : Yellow SB : Sky blue
BR : Brown O : Orange GR : Gray R : Red P : Pink V : Violet

H4J07E01CB

HEADLAMP <LHD>

M1901001500802

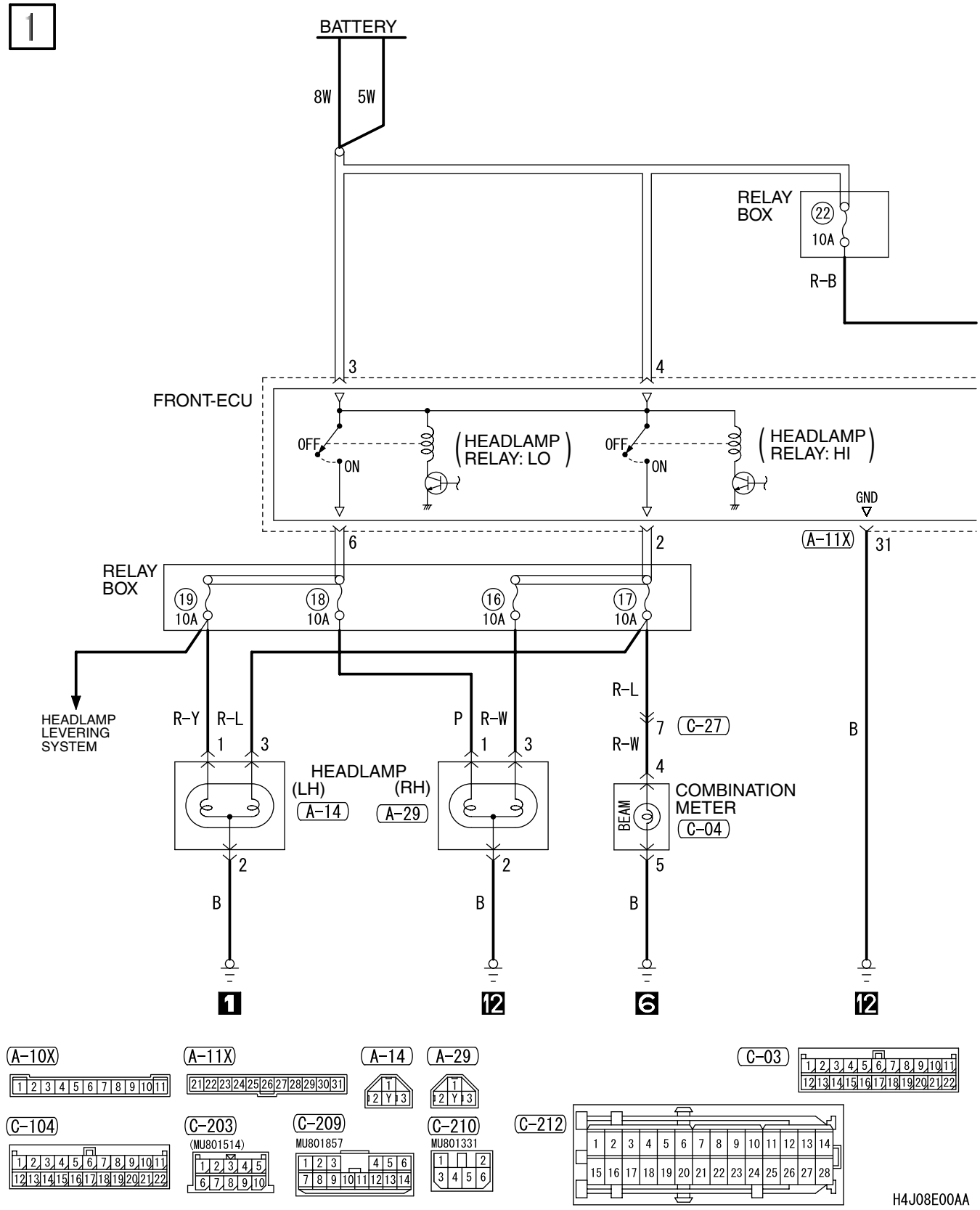

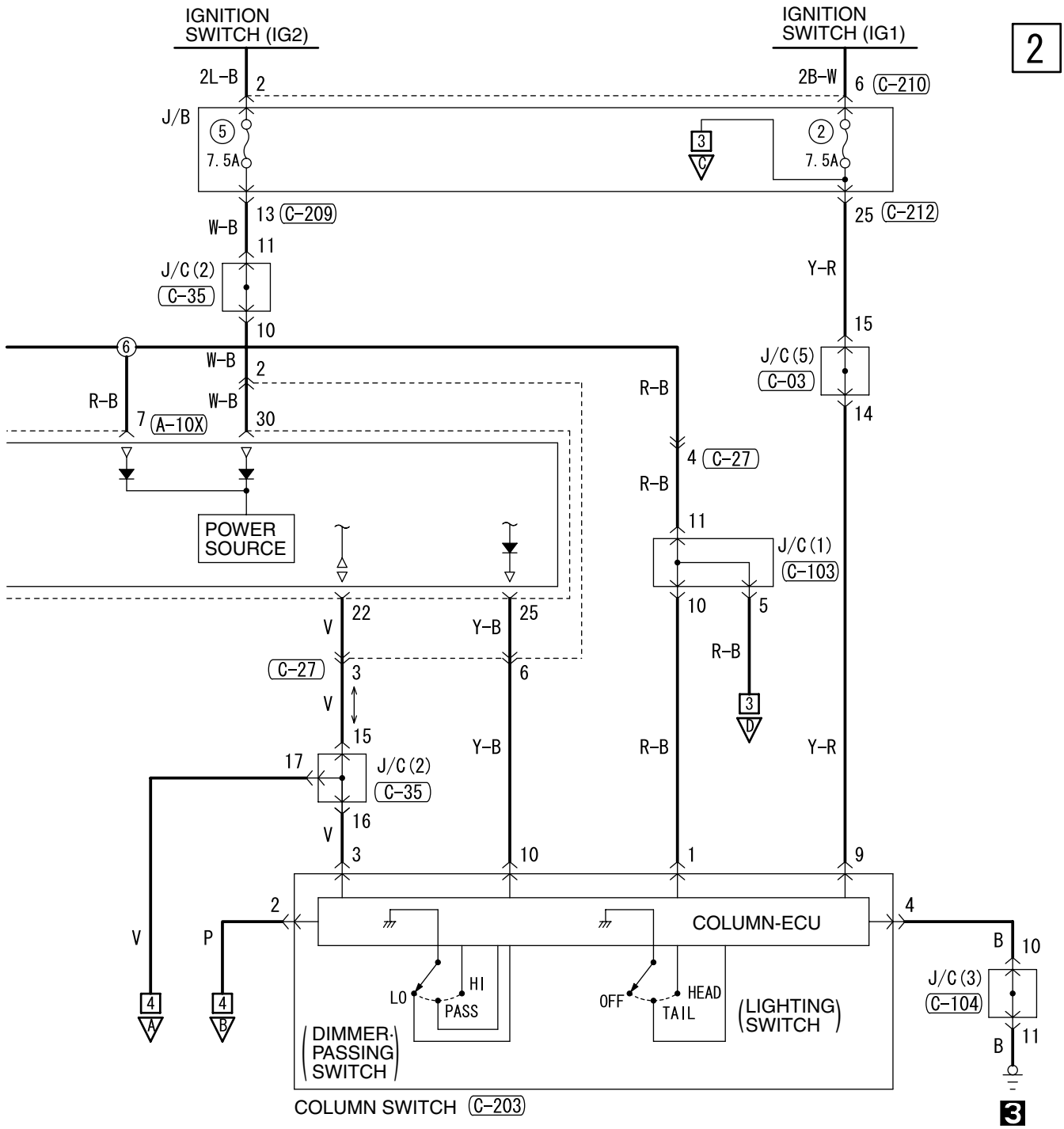

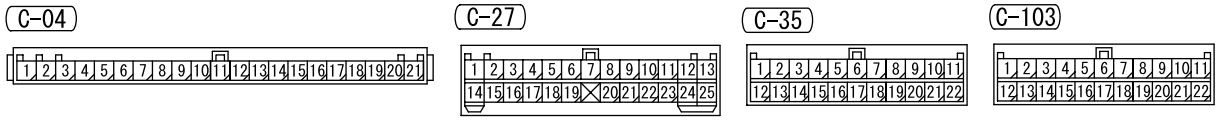

Wire colour code
B : Black LG : Light green G : Green L : Blue W : White Y : Yellow SB : Sky blue
BR : Brown O : Orange GR : Gray R : Red P : Pink V : Violet

H4J08E00AB

HEADLAMP <LHD> (CONTINUED)

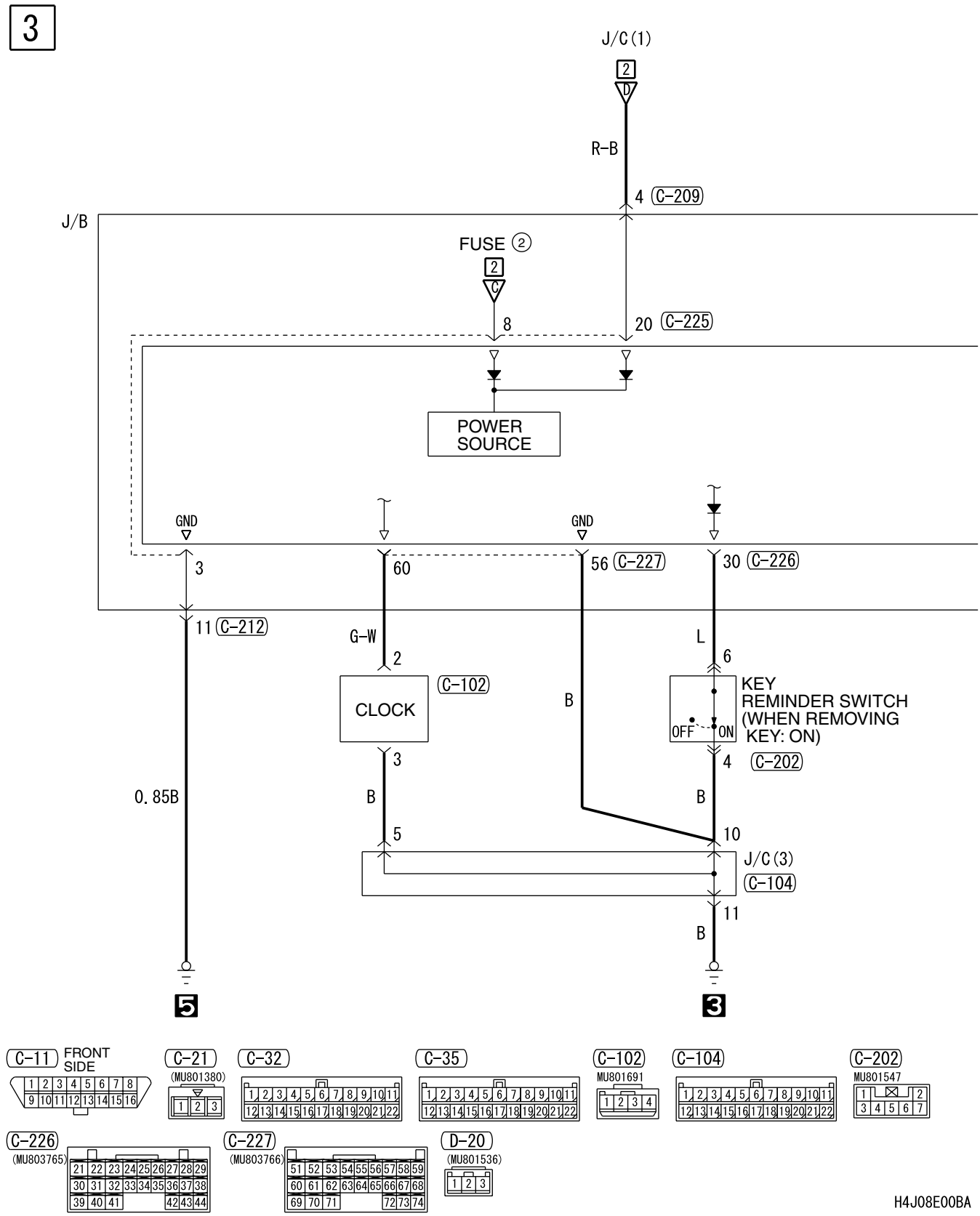

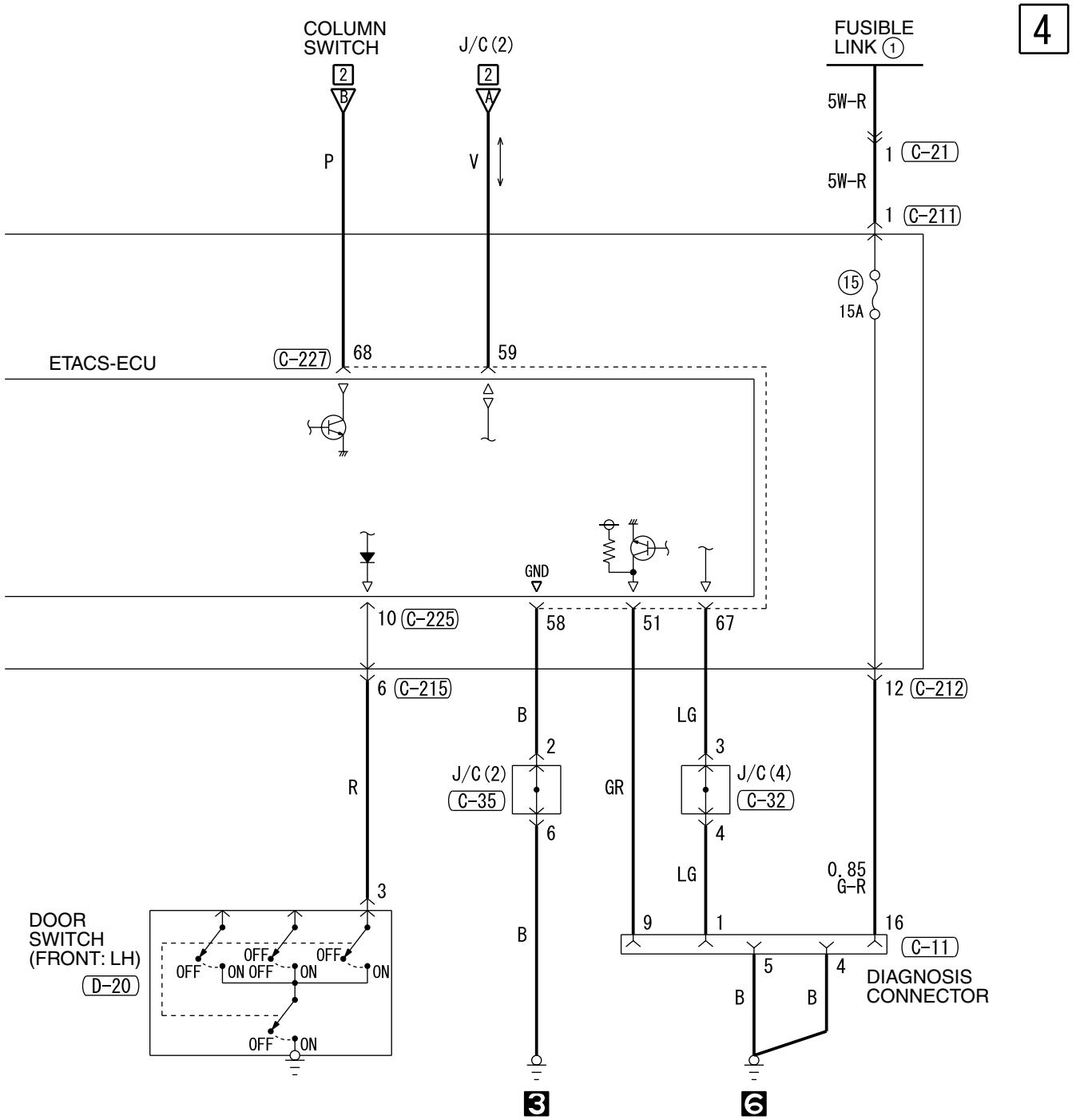

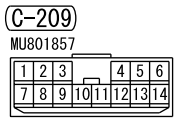

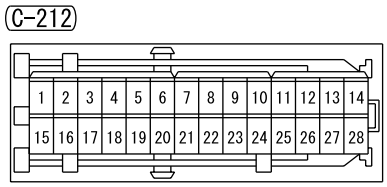

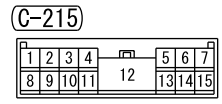

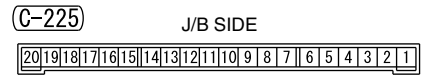

Wire colour code
B : Black LG : Light green G : Green L : Blue
W : White Y : Yellow SB : Sky blue BR : Brown
O : Orange GR : Gray R : Red P : Pink V : Violet

H4J08E00BB

HEADLAMP <RHD>

M1901001500813

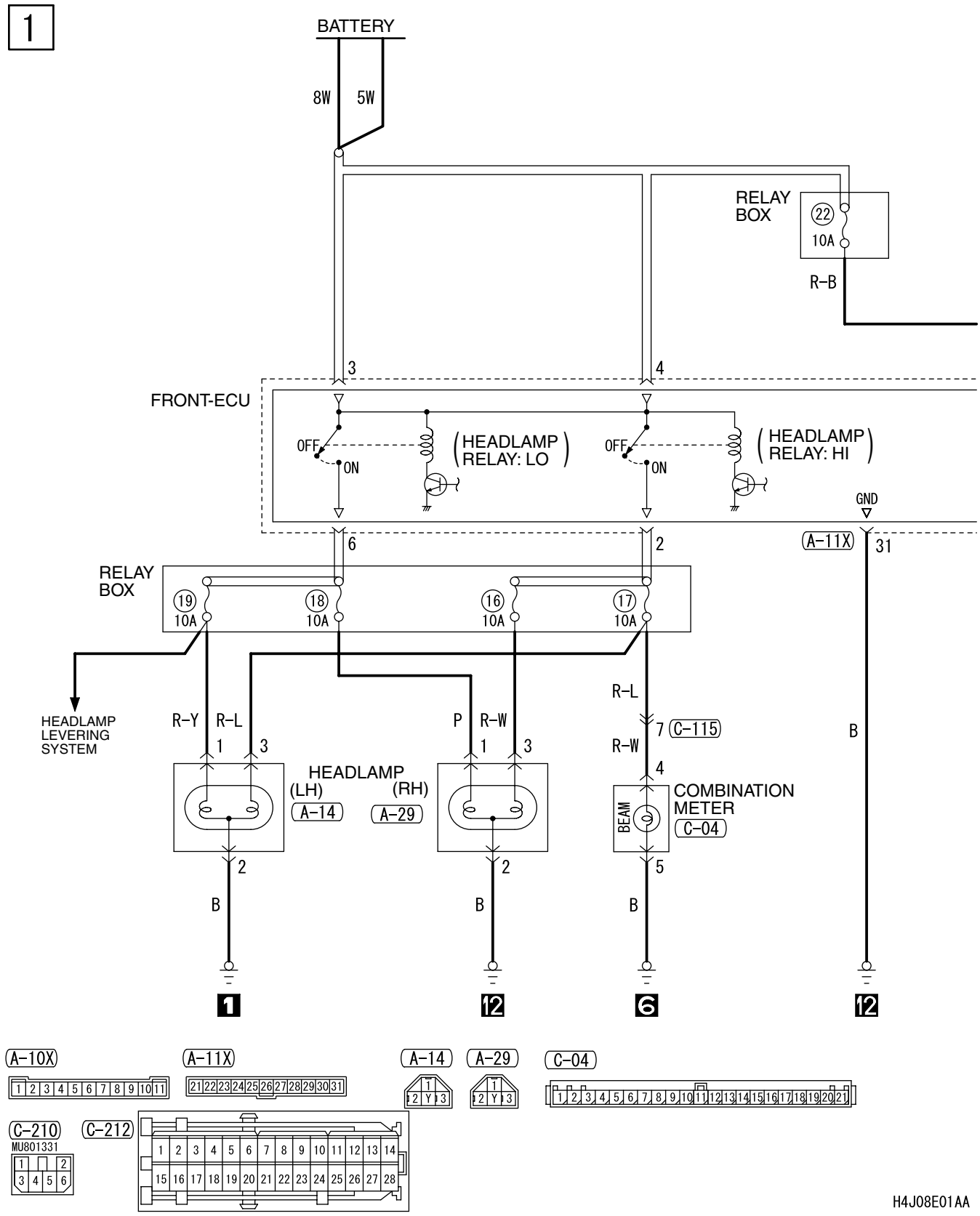

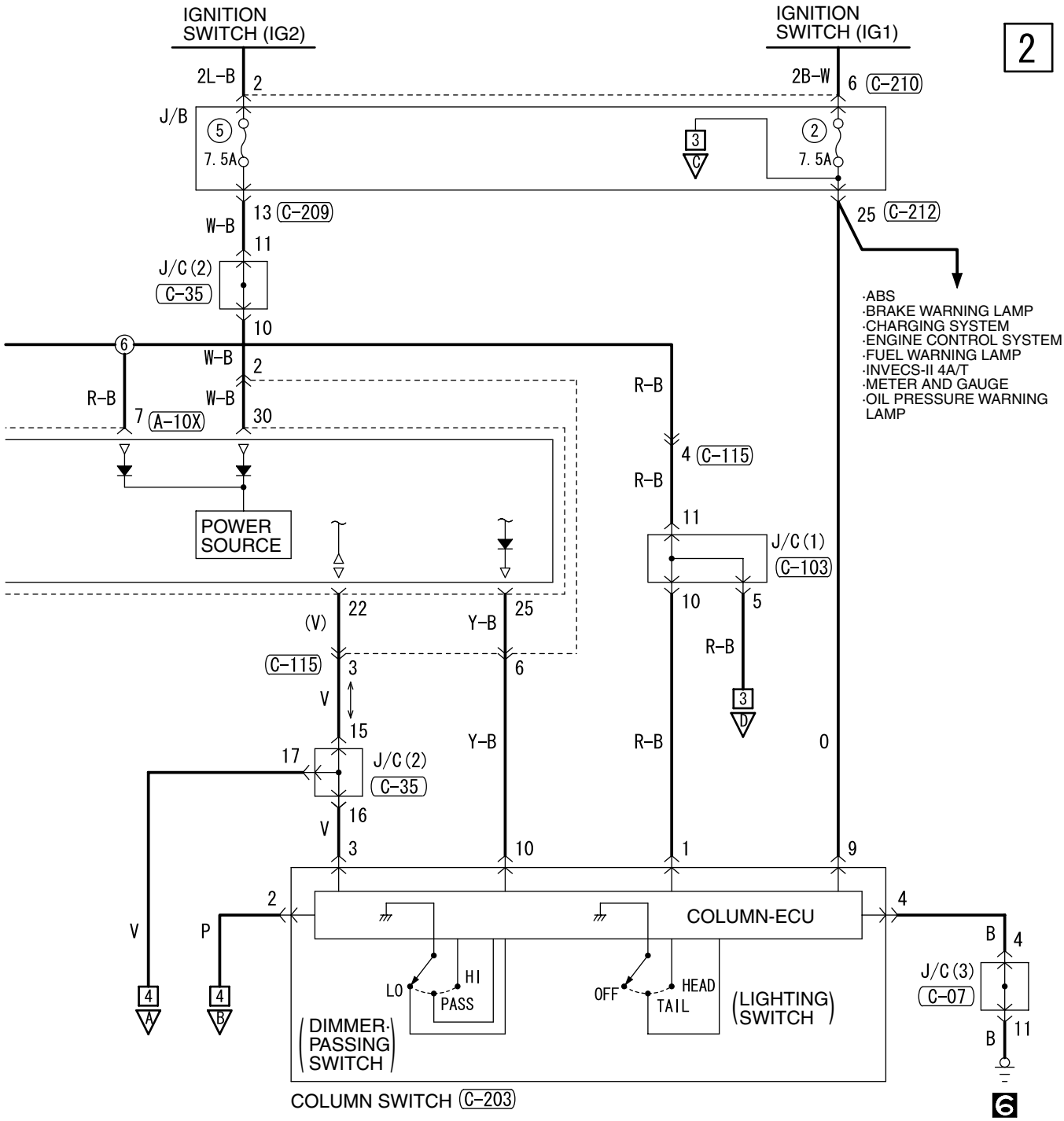

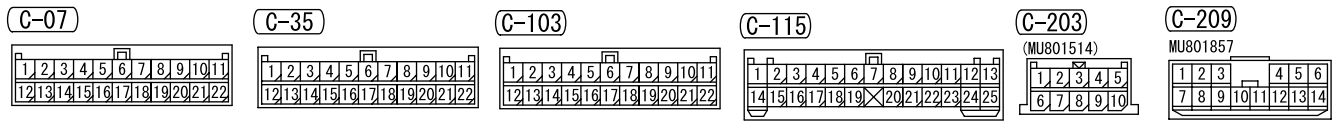

Wire colour code
B : Black LG : Light green G : Green L : Blue W : White Y : Yellow SB : Sky blue
BR : Brown O : Orange GR : Gray R : Red P : Pink V : Violet

H4J08E01AB

HEADLAMP <RHD> (CONTINUED)

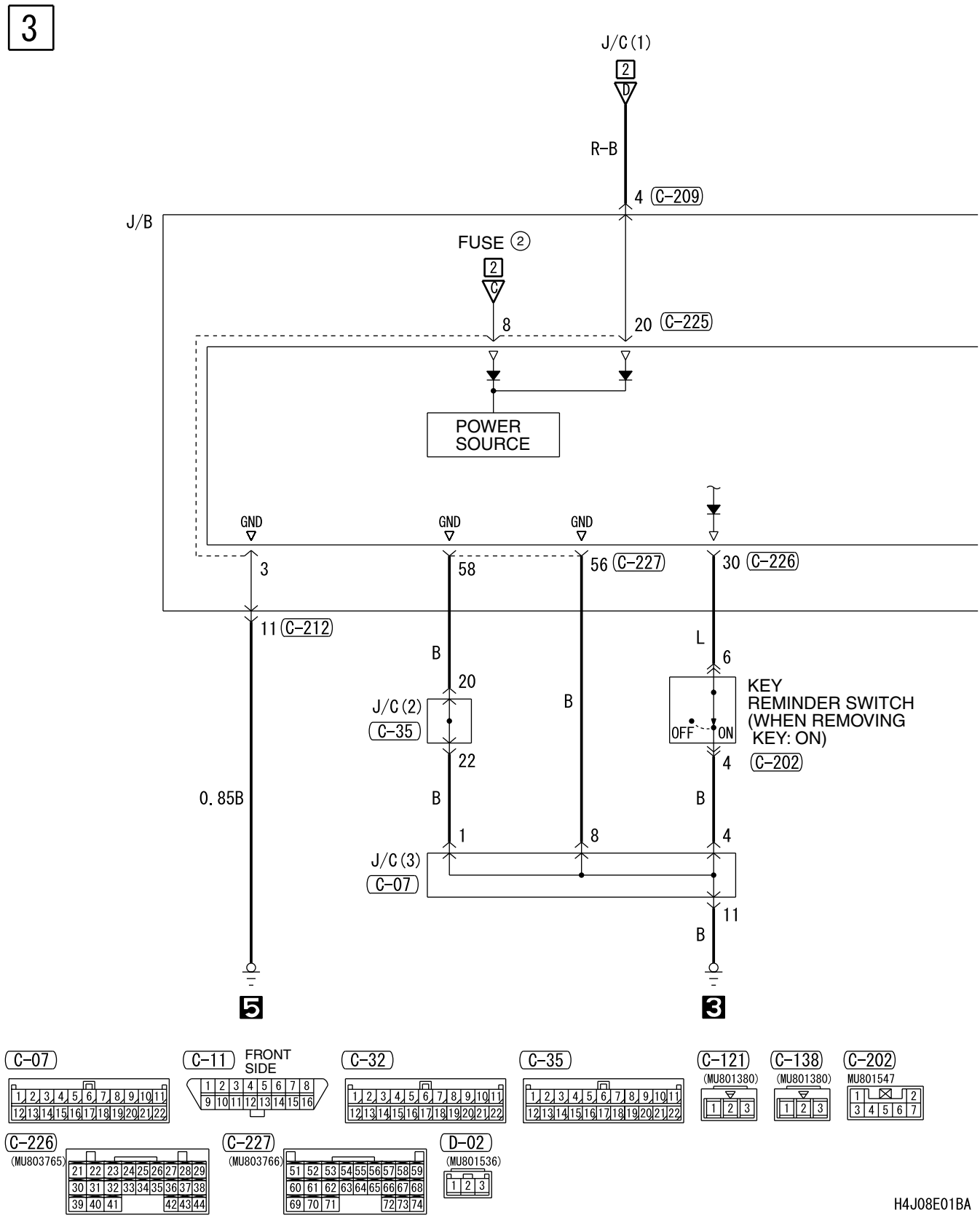

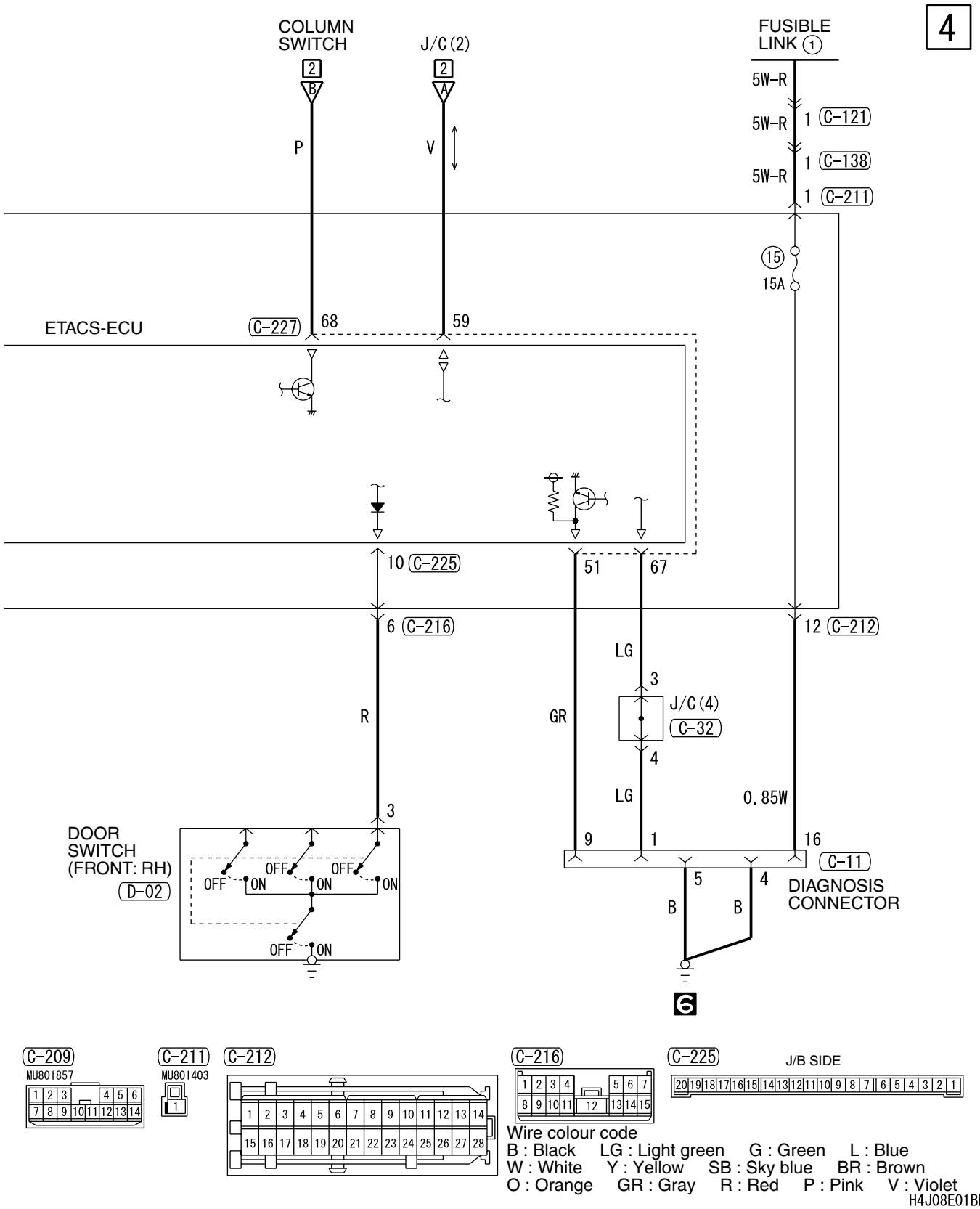

Wire colour code
B : Black LG : Light green G : Green L : Blue
W : White Y : Yellow SB : Sky blue BR : Brown
O : Orange GR : Gray R : Red P : Pink V : Violet

H4J08E01BB

TAIL LAMP, POSITION LAMP, LICENCE PLATE LAMP AND LIGHTING MONITOR BUZZER <LHD>

M1901001700088

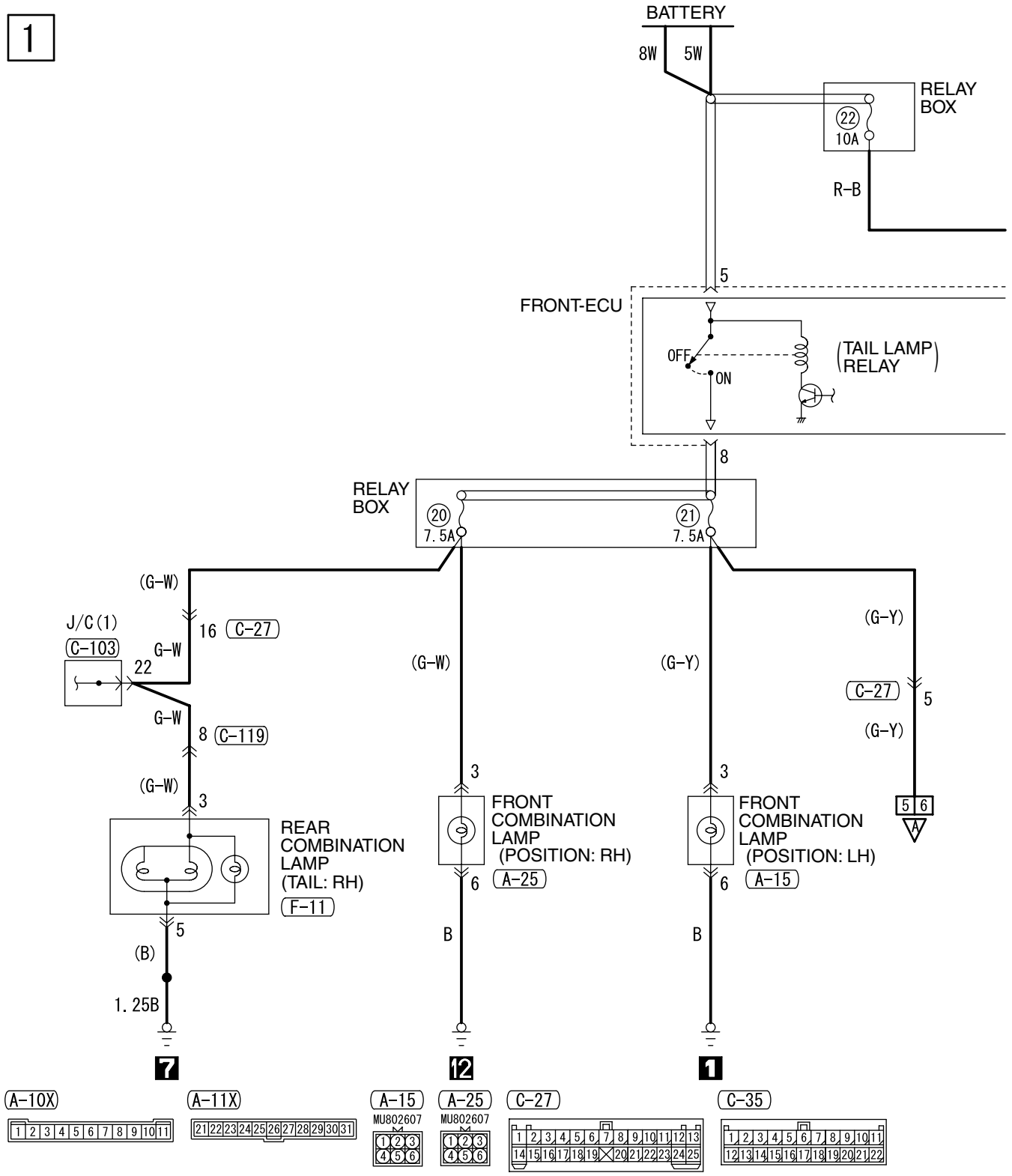

H4J08E02AA

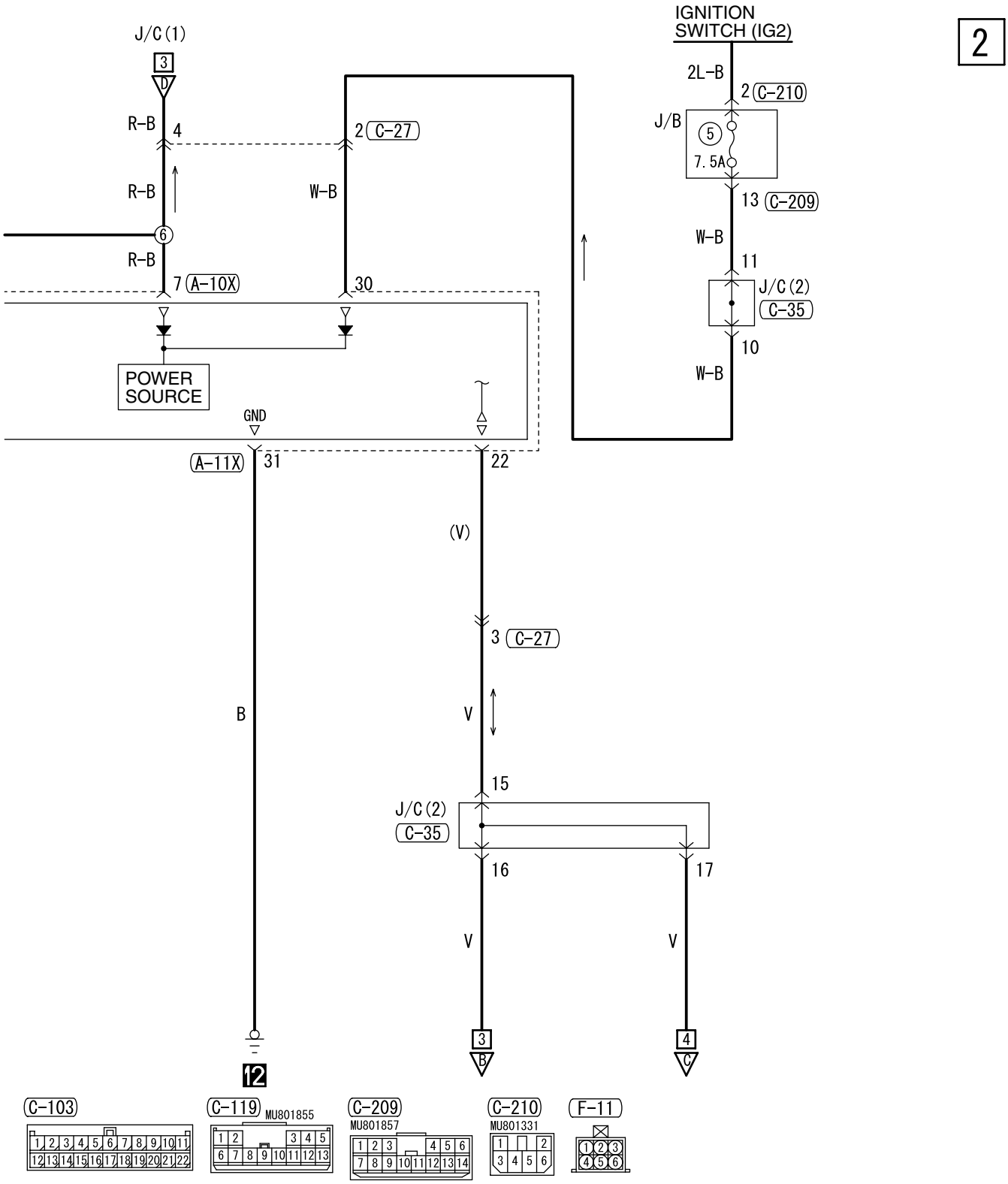

Wire colour code
B : Black LG : Light green G : Green L : Blue W : White Y : Yellow SB : Sky blue
BR : Brown O : Orange GR : Gray R : Red P : Pink V : Violet

H4J08E02AB

TAIL LAMP, POSITION LAMP, LICENCE PLATE LAMP AND LIGHTING MONITOR BUZZER <LHD> (CONTINUED)

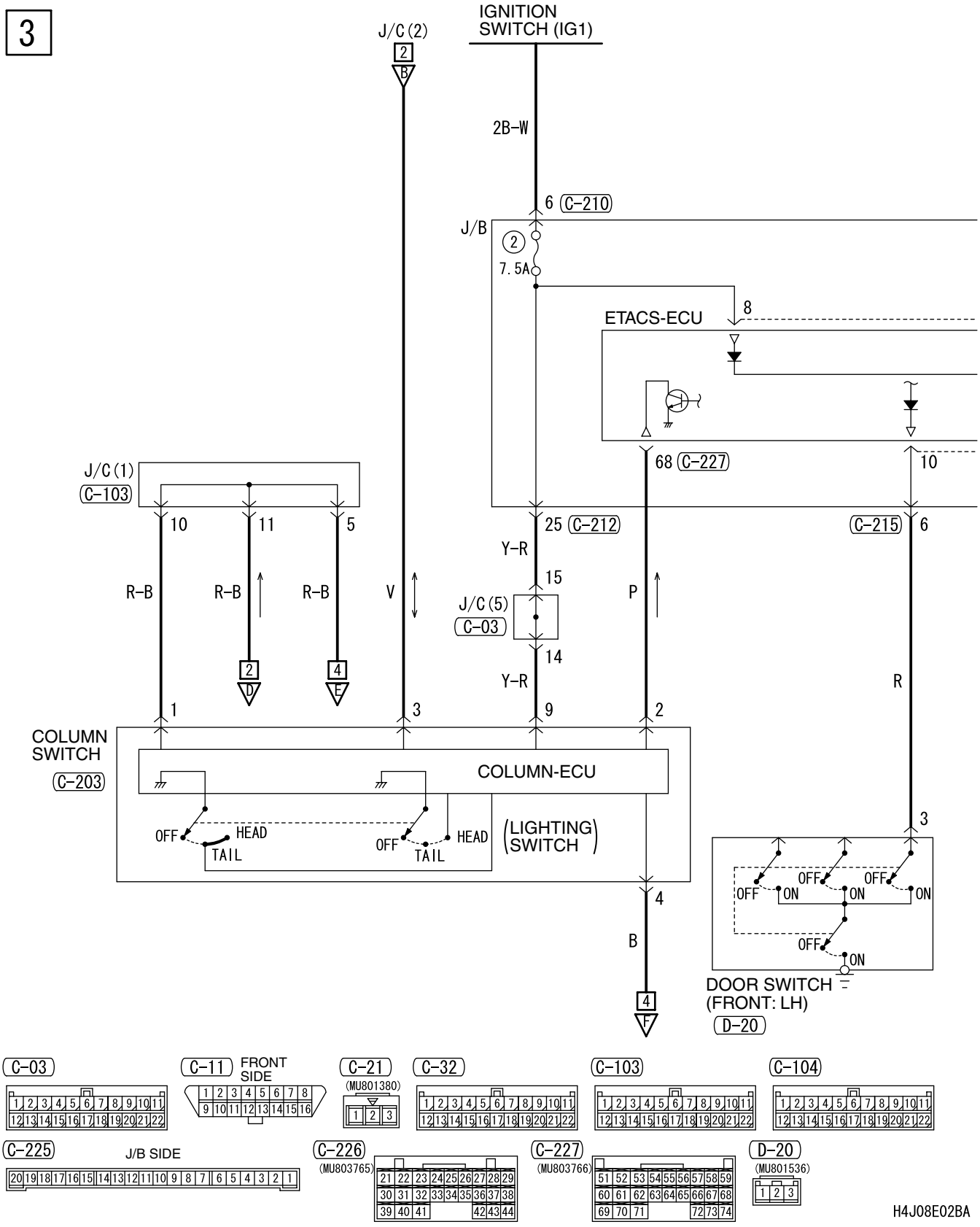

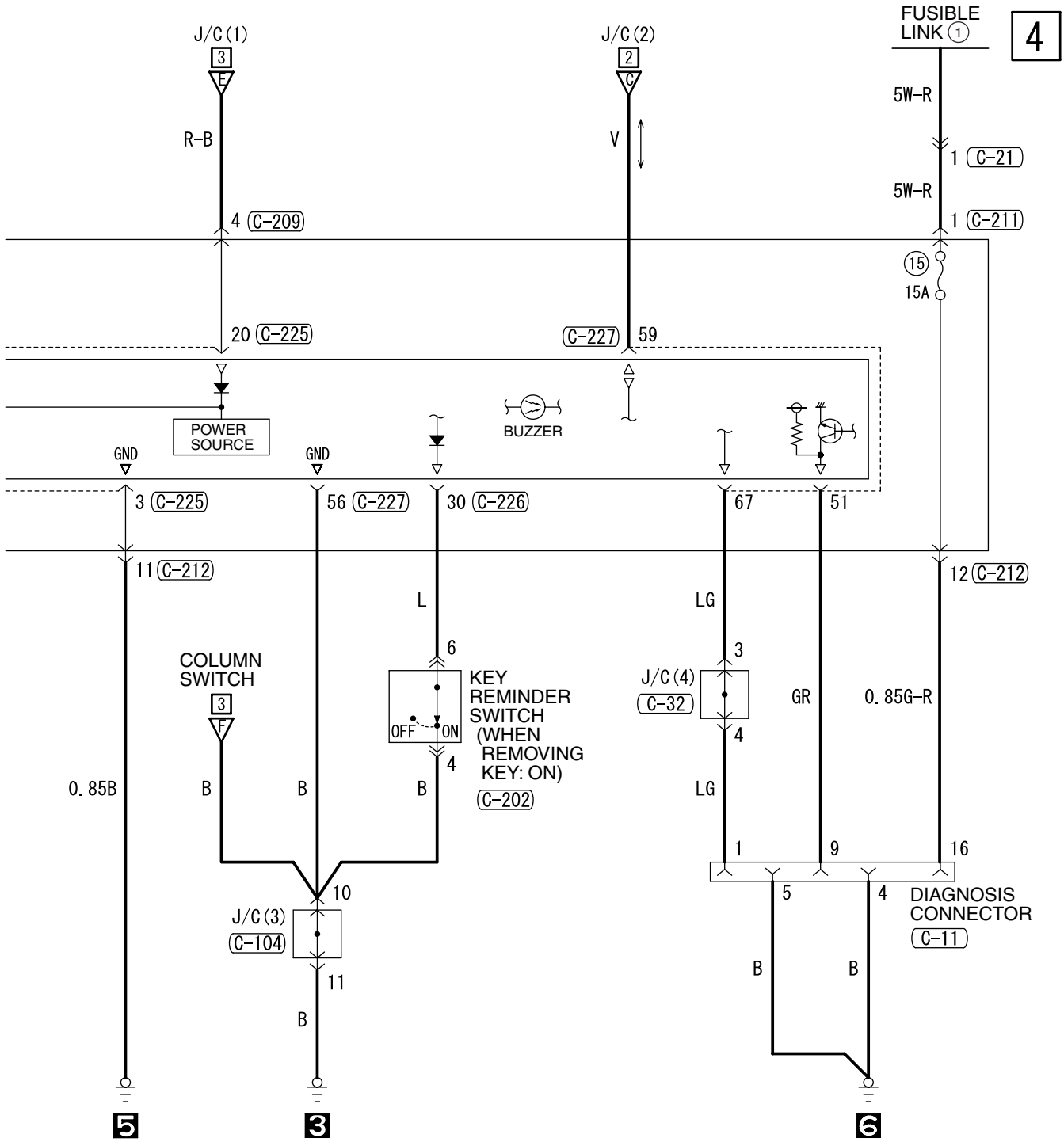

Wire colour code
B : Black LG : Light green G : Green L : Blue W : White Y : Yellow SB : Sky blue
BR : Brown O : Orange GR : Gray R : Red P : Pink V : Violet

H4J08E02BB

TAIL LAMP, POSITION LAMP, LICENCE PLATE LAMP AND LIGHTING MONITOR BUZZER <LHD> (CONTINUED)

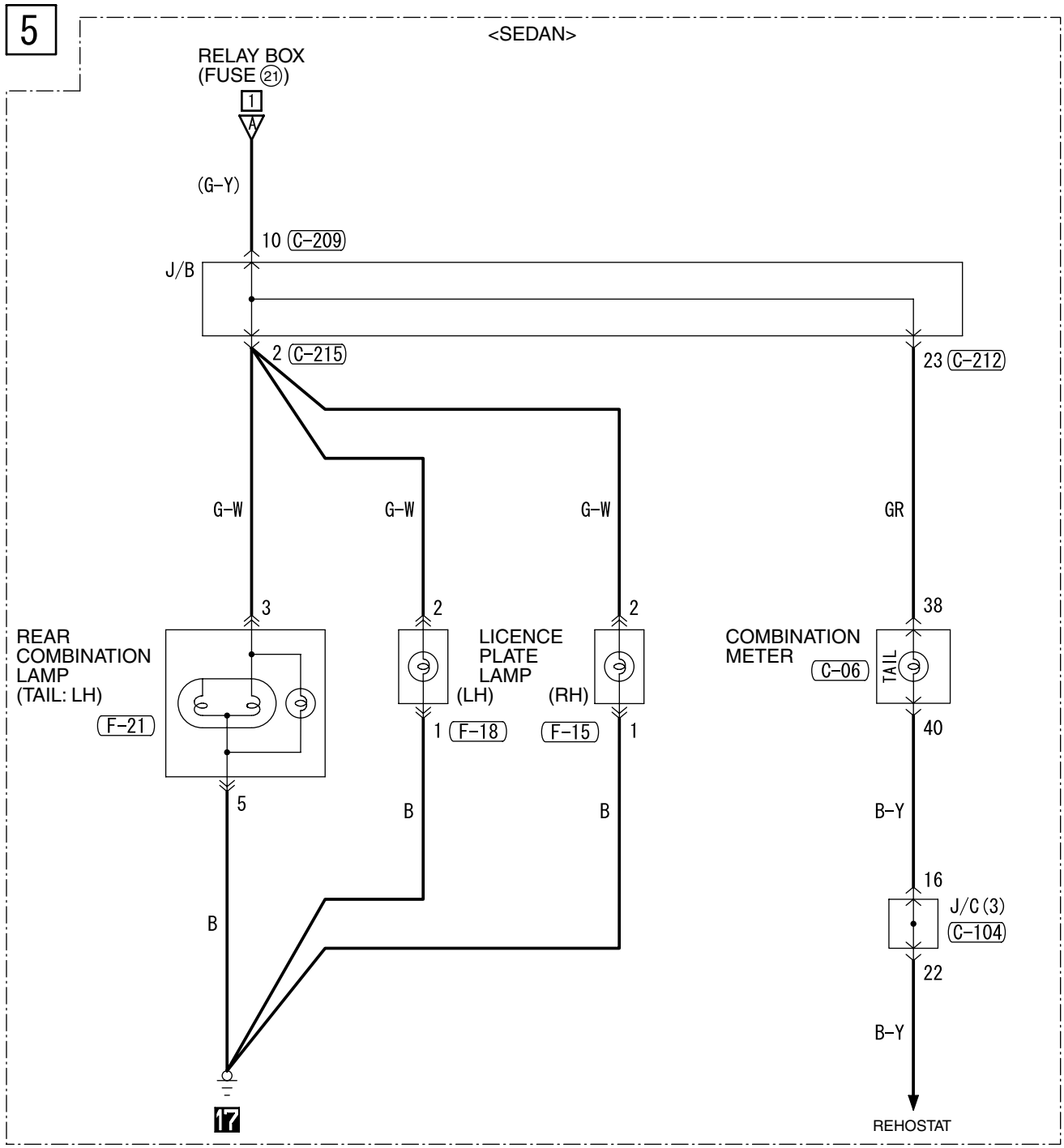

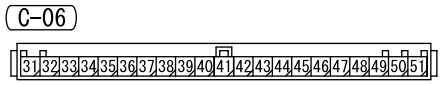

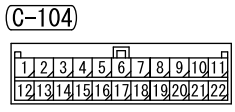

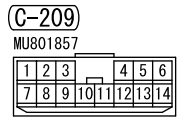

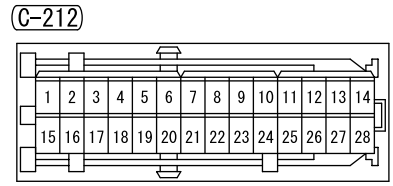

H4J08E02CA

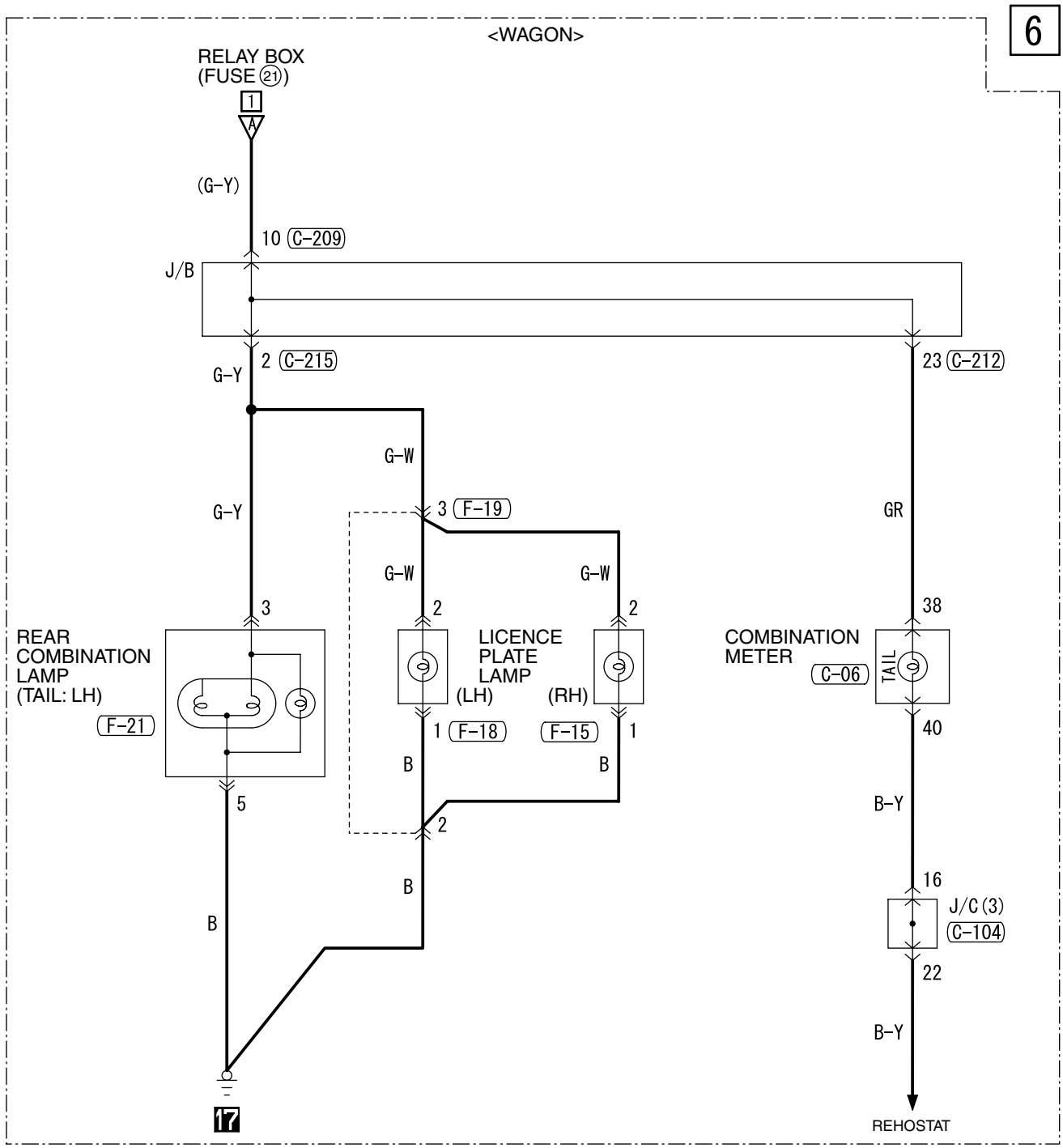

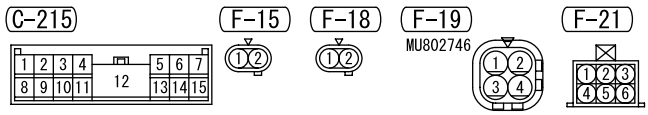

Wire colour code
B : Black LG : Light green G : Green L : Blue W : White Y : Yellow SB : Sky blue
BR : Brown O : Orange GR : Gray R : Red P : Pink V : Violet

H4J08E02CB

TAIL LAMP, POSITION LAMP, LICENCE PLATE LAMP AND LIGHTING MONITOR BUZZER <RHD>

M1901001700099

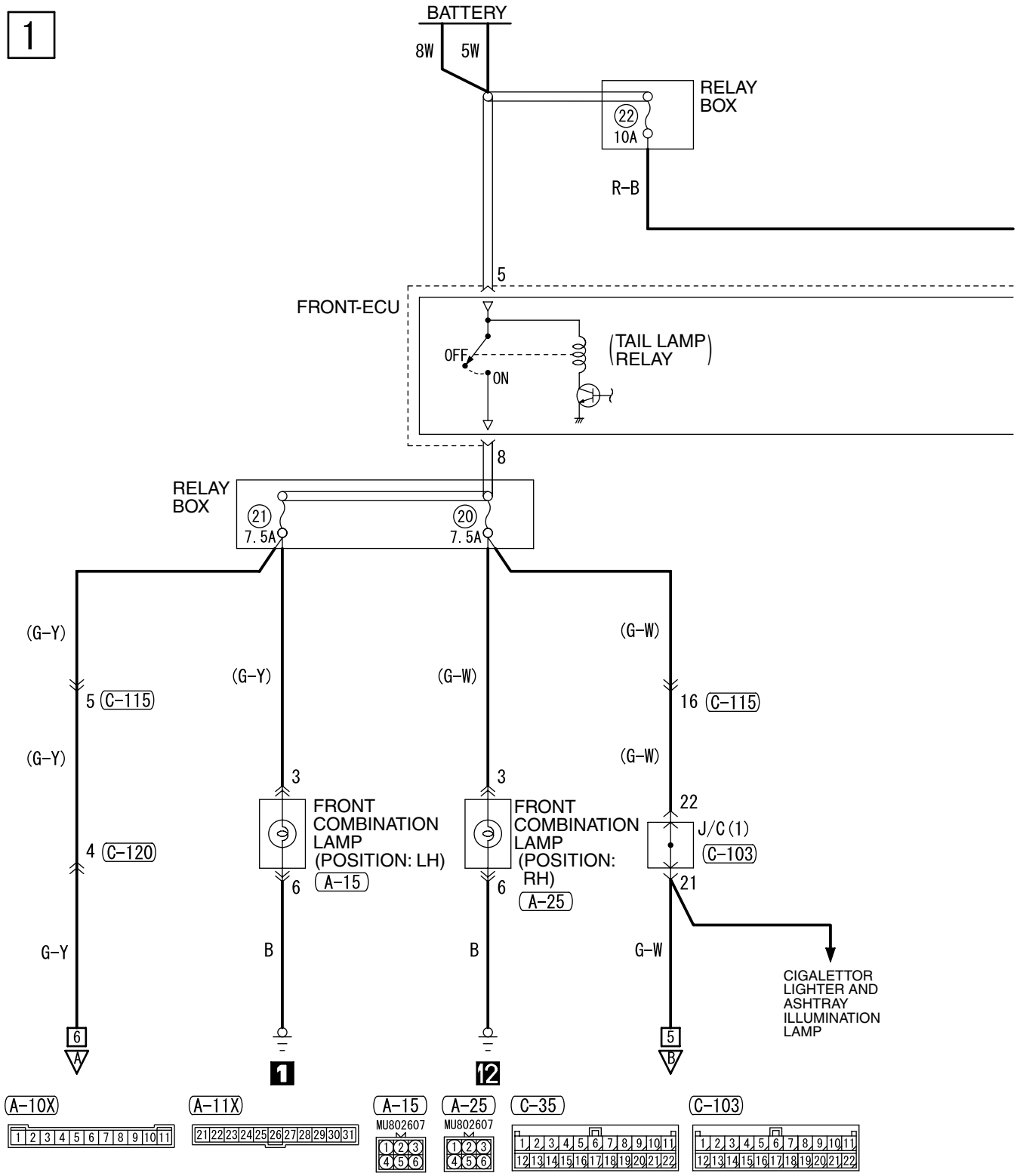

H4J08E03AA

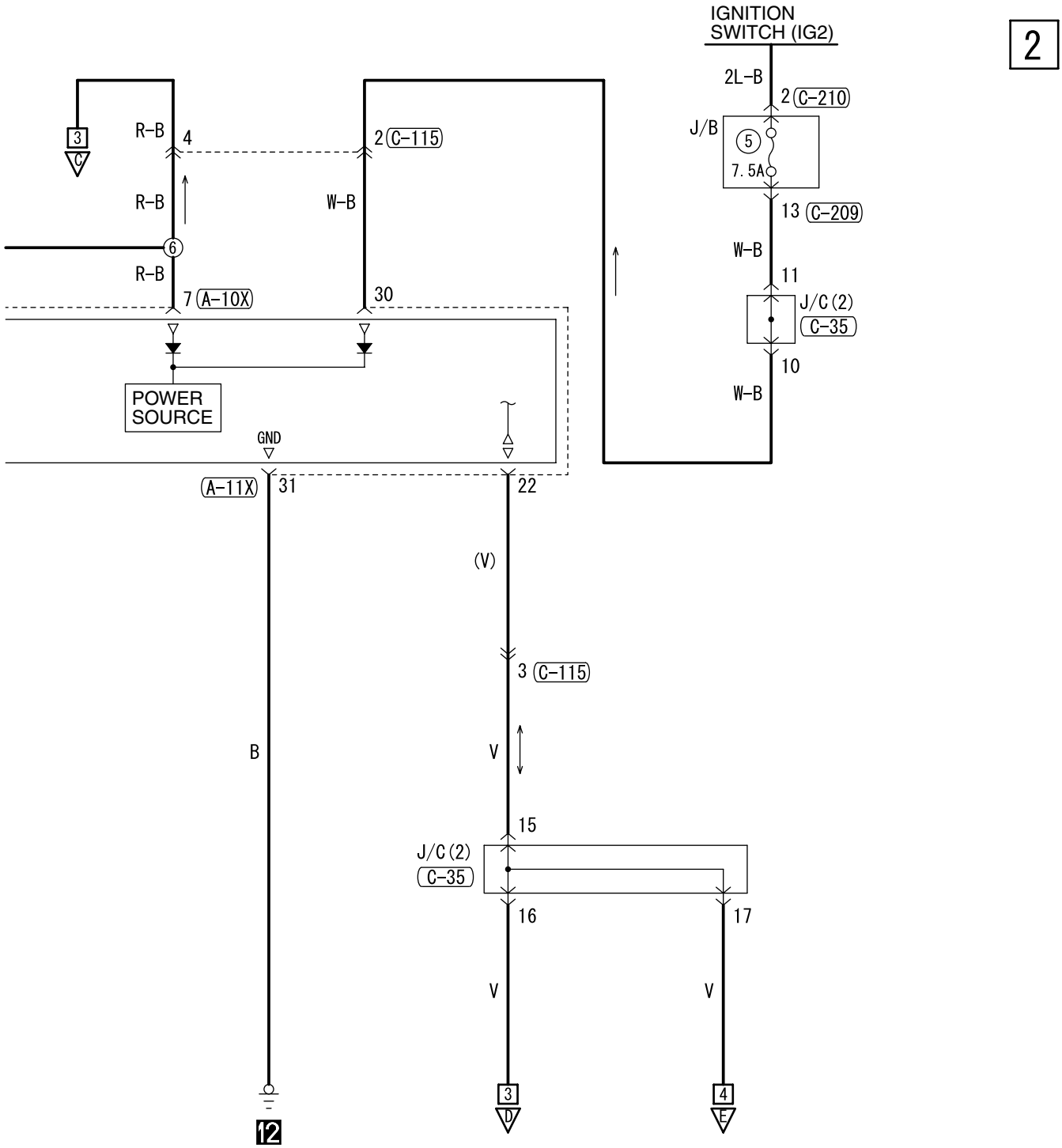

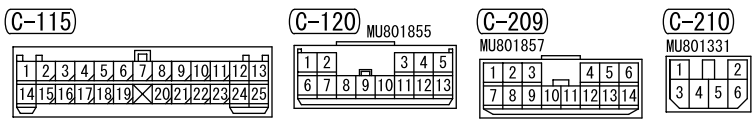

Wire colour code
B : Black LG : Light green G : Green L : Blue W : White Y : Yellow SB : Sky blue
BR : Brown O : Orange GR : Gray R : Red P : Pink V : Violet

H4J08E03AB

TAIL LAMP, POSITION LAMP, LICENCE PLATE LAMP AND LIGHTING MONITOR BUZZER <RHD> (CONTINUED)

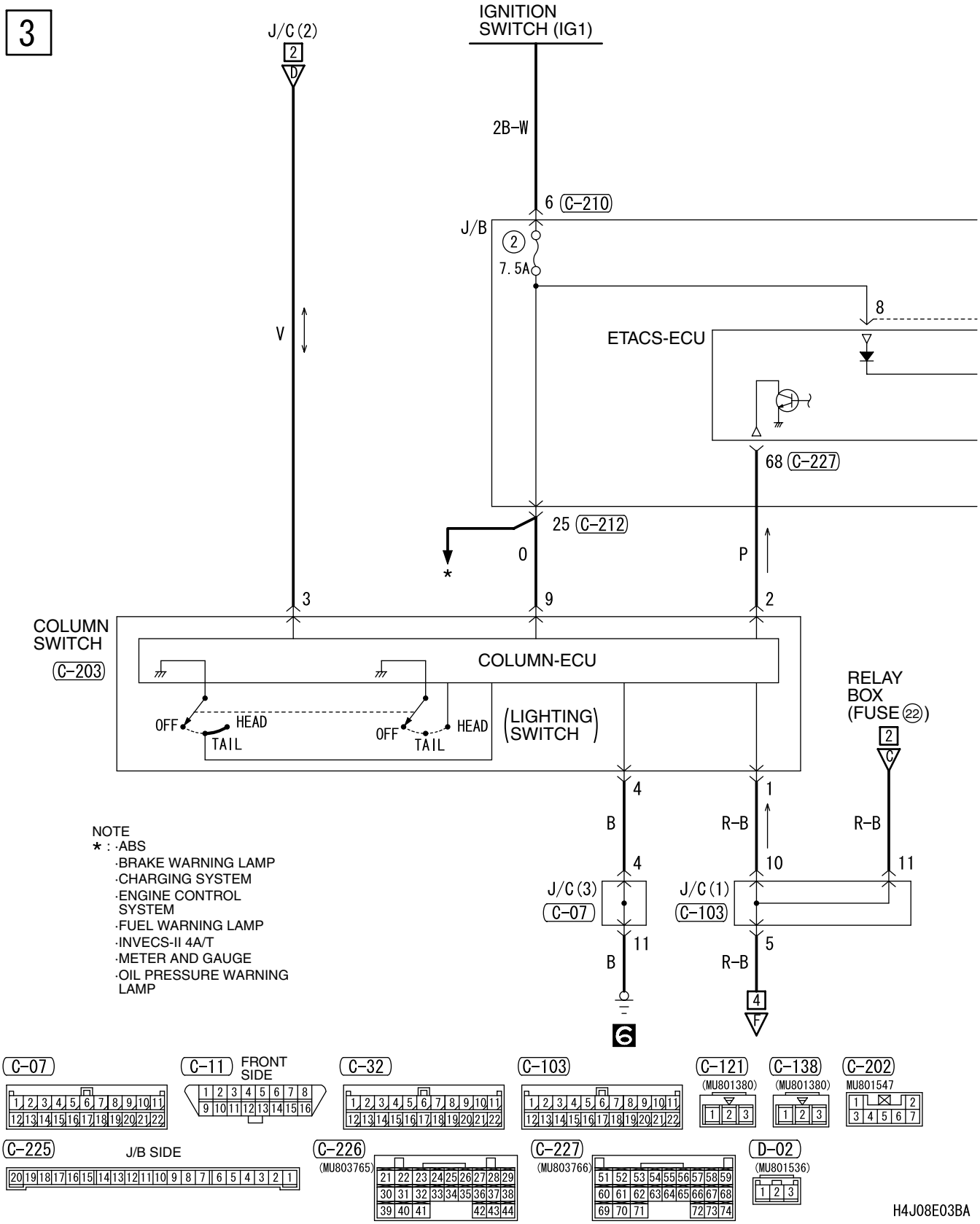

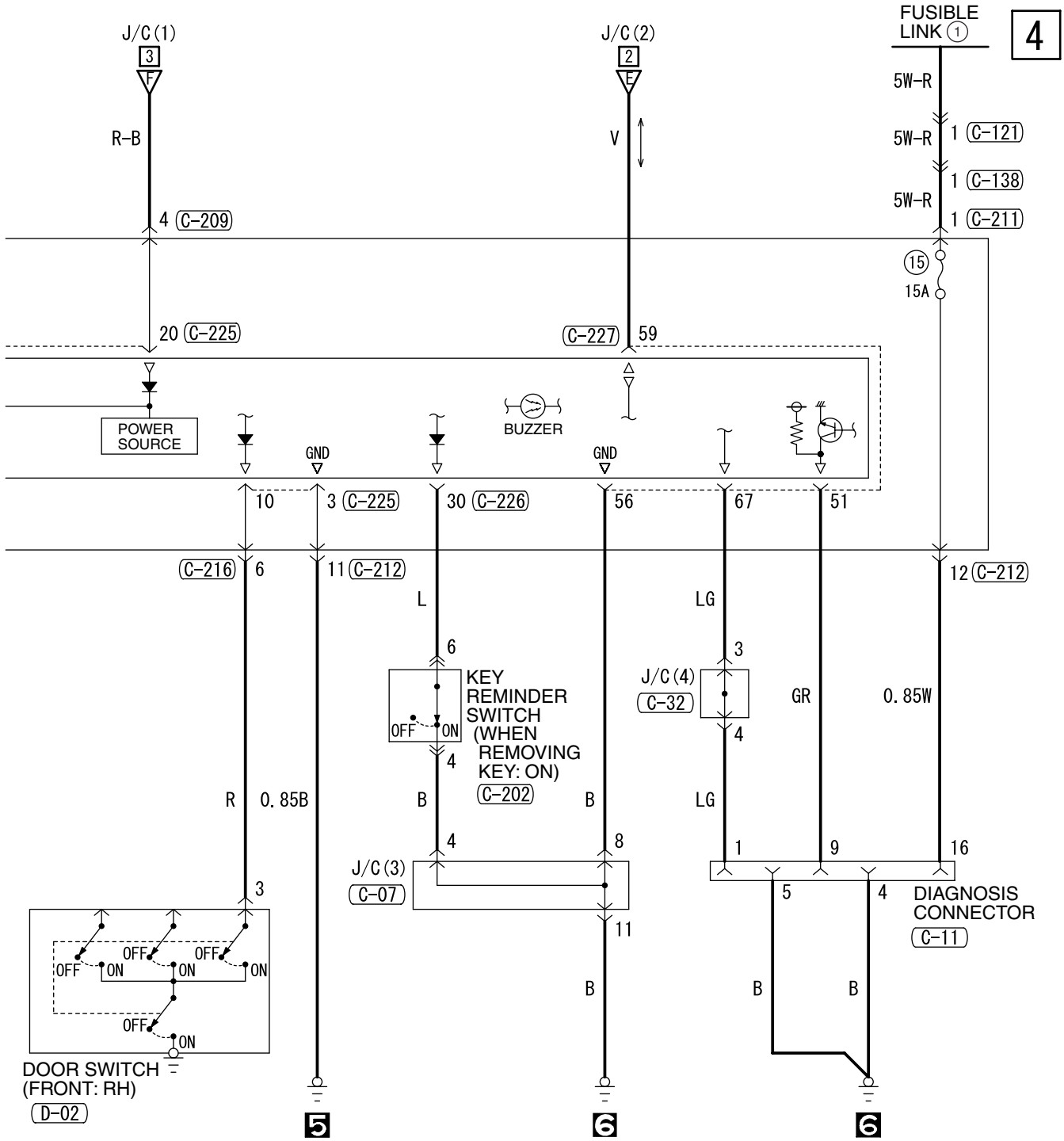

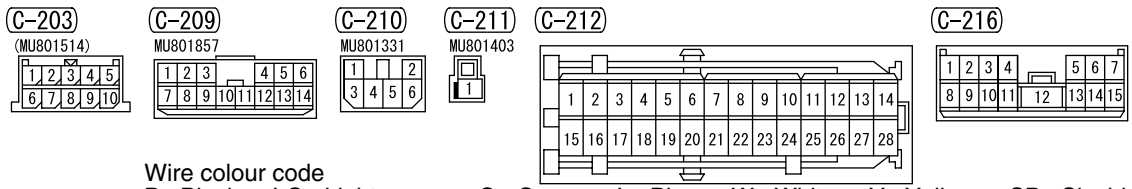

Wire colour code
B : Black LG : Light green G : Green L : Blue W : White Y : Yellow SB : Sky blue
BR : Brown O : Orange GR : Gray R : Red P : Pink V : Violet

H4J08E03BB

TAIL LAMP, POSITION LAMP, LICENCE PLATE LAMP AND LIGHTING MONITOR BUZZER <RHD> (CONTINUED)

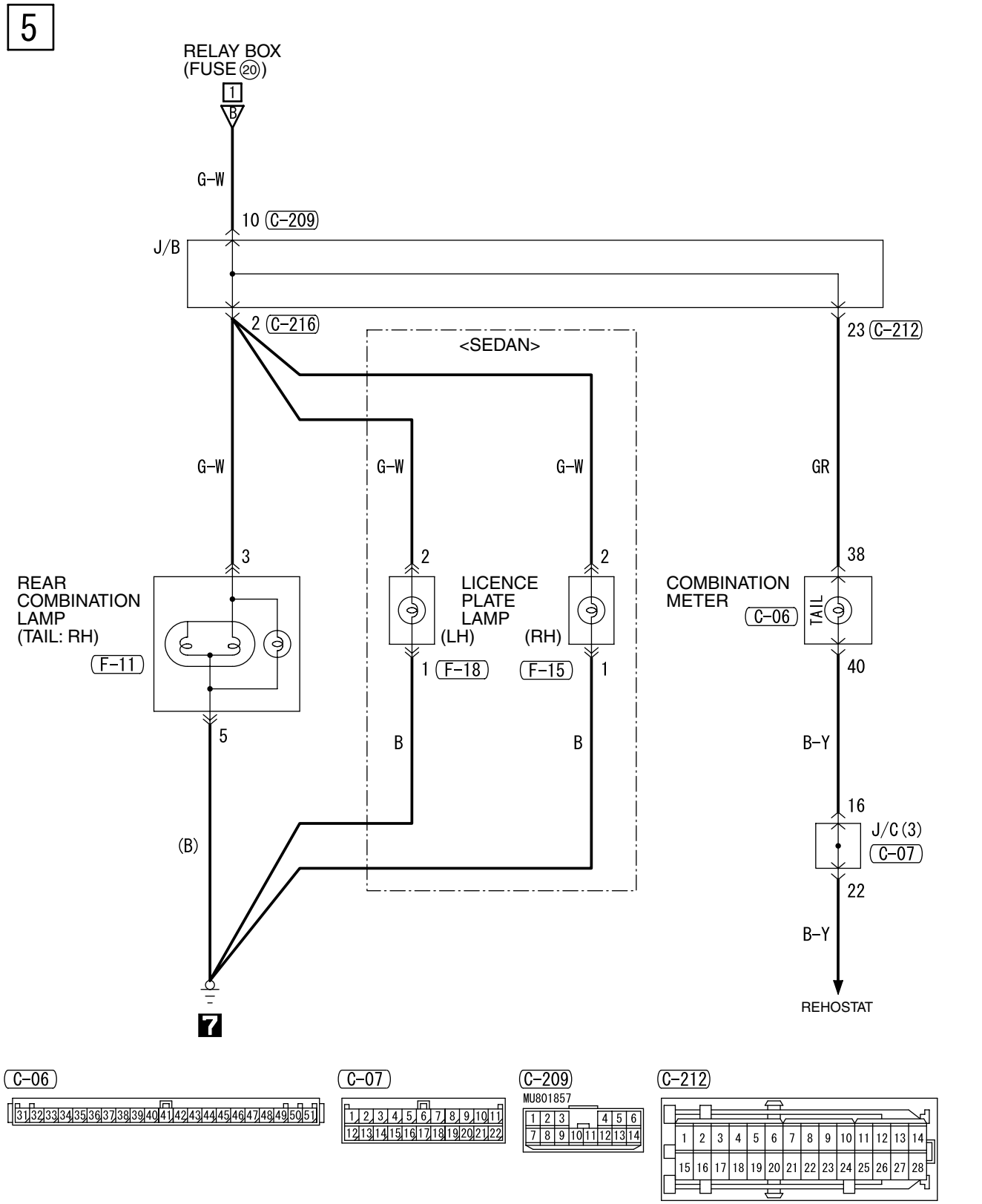

H4J08E03CA

6

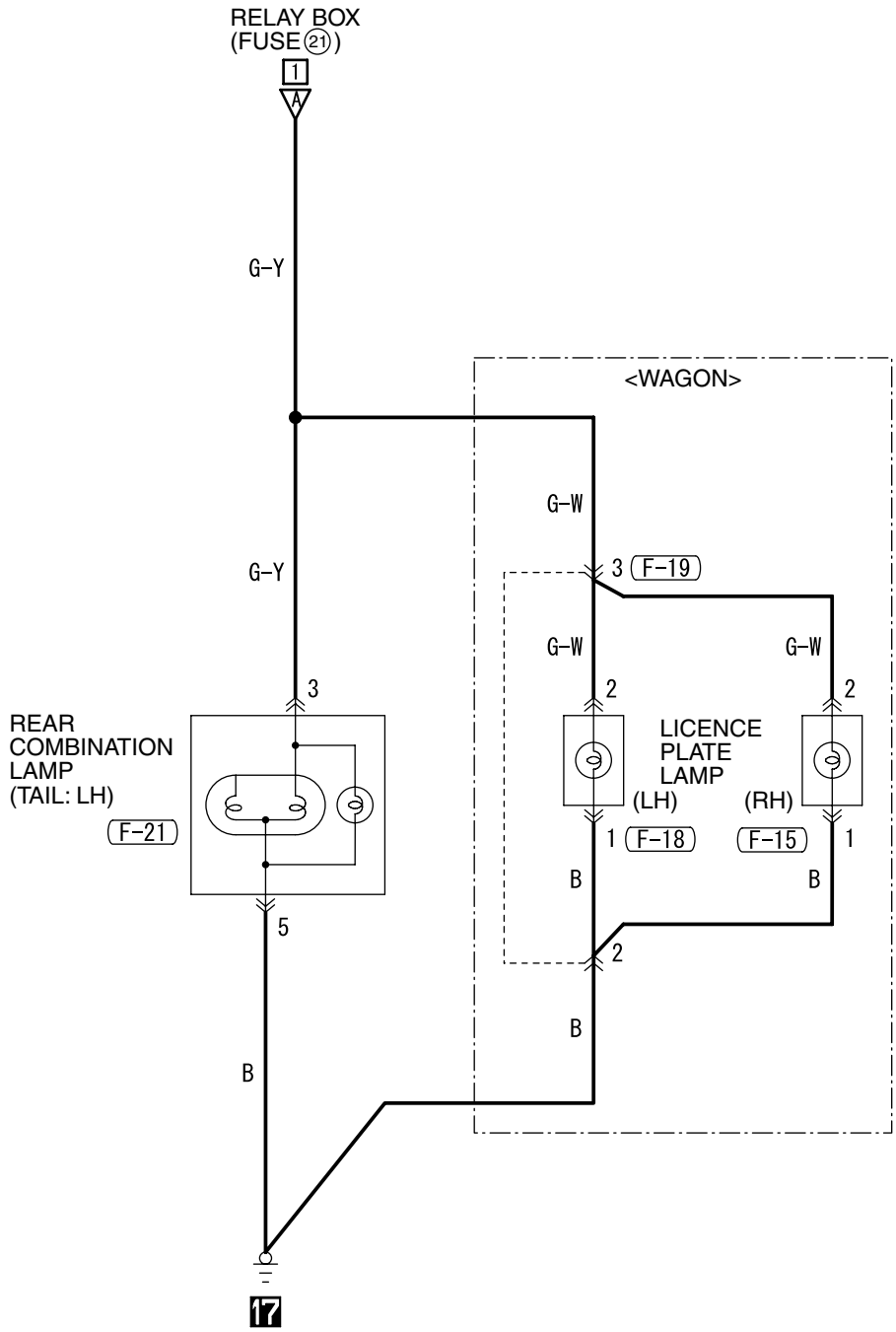

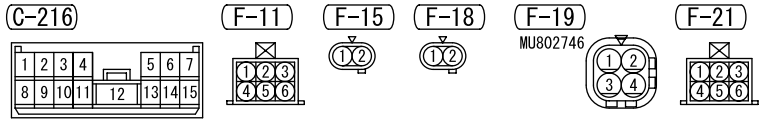

Wire colour code
B : Black LG : Light green G : Green L : Blue W : White Y : Yellow SB : Sky blue
BR : Brown O : Orange GR : Gray R : Red P : Pink V : Violet

H4J08E03CB

FRONT FOG LAMP <LHD>

M1901011900146

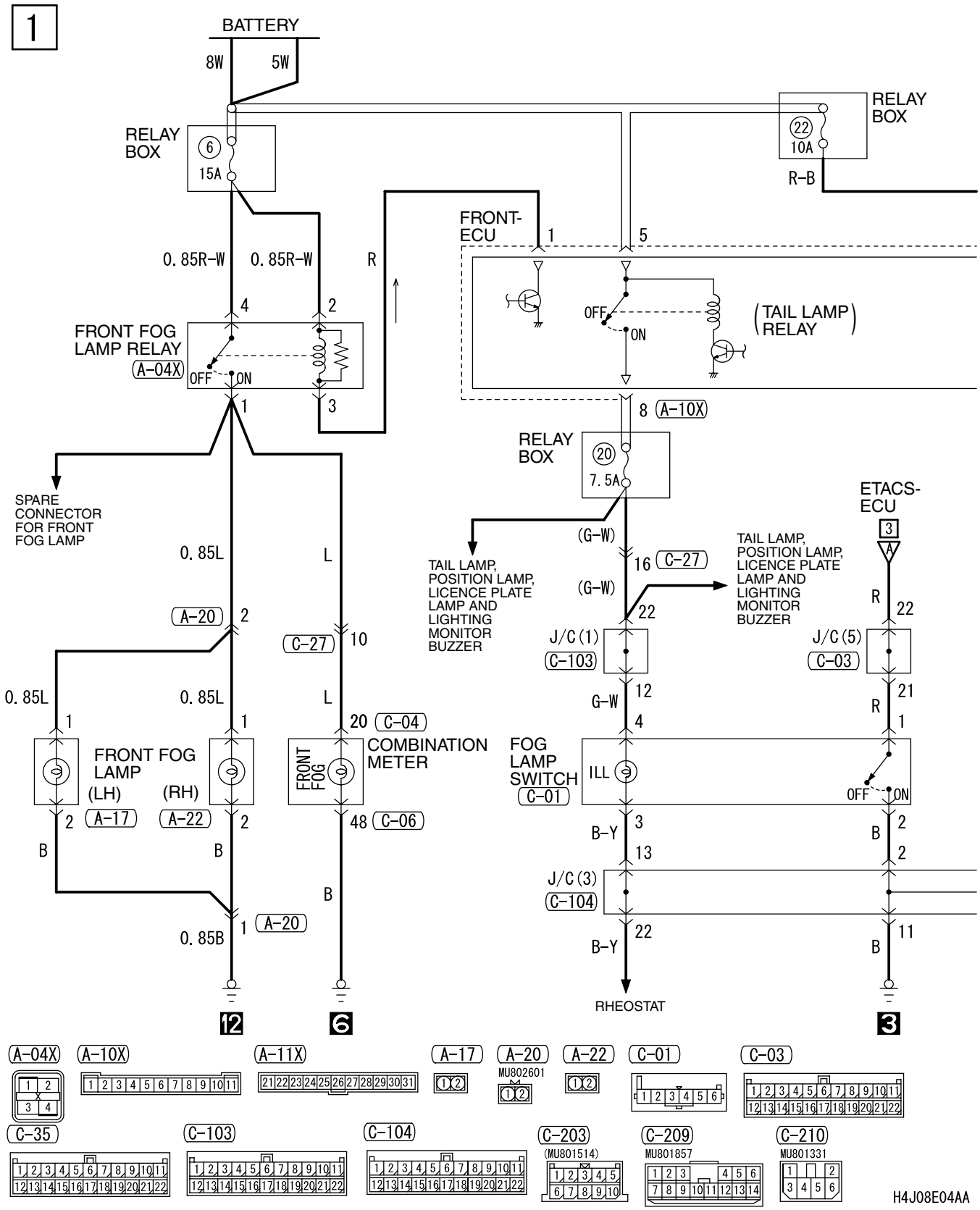

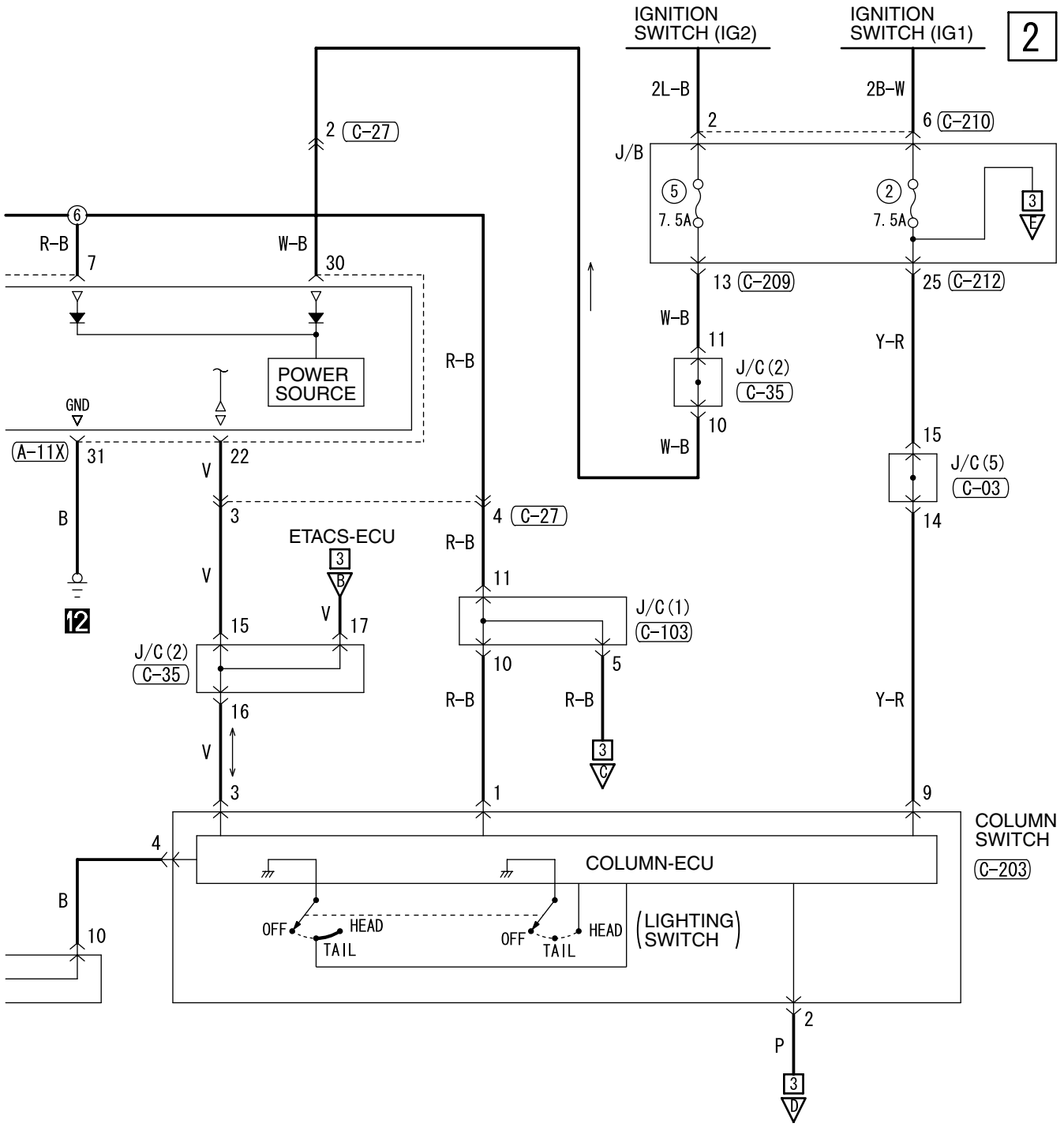

Wire colour code
B : Black LG : Light green G : Green L : Blue
W : White Y : Yellow SB : Sky blue BR : Brown
O : Orange GR : Gray R : Red P : Pink V : Violet

H4J08E04AB

FRONT FOG LAMP <LHD> (CONTINUED)

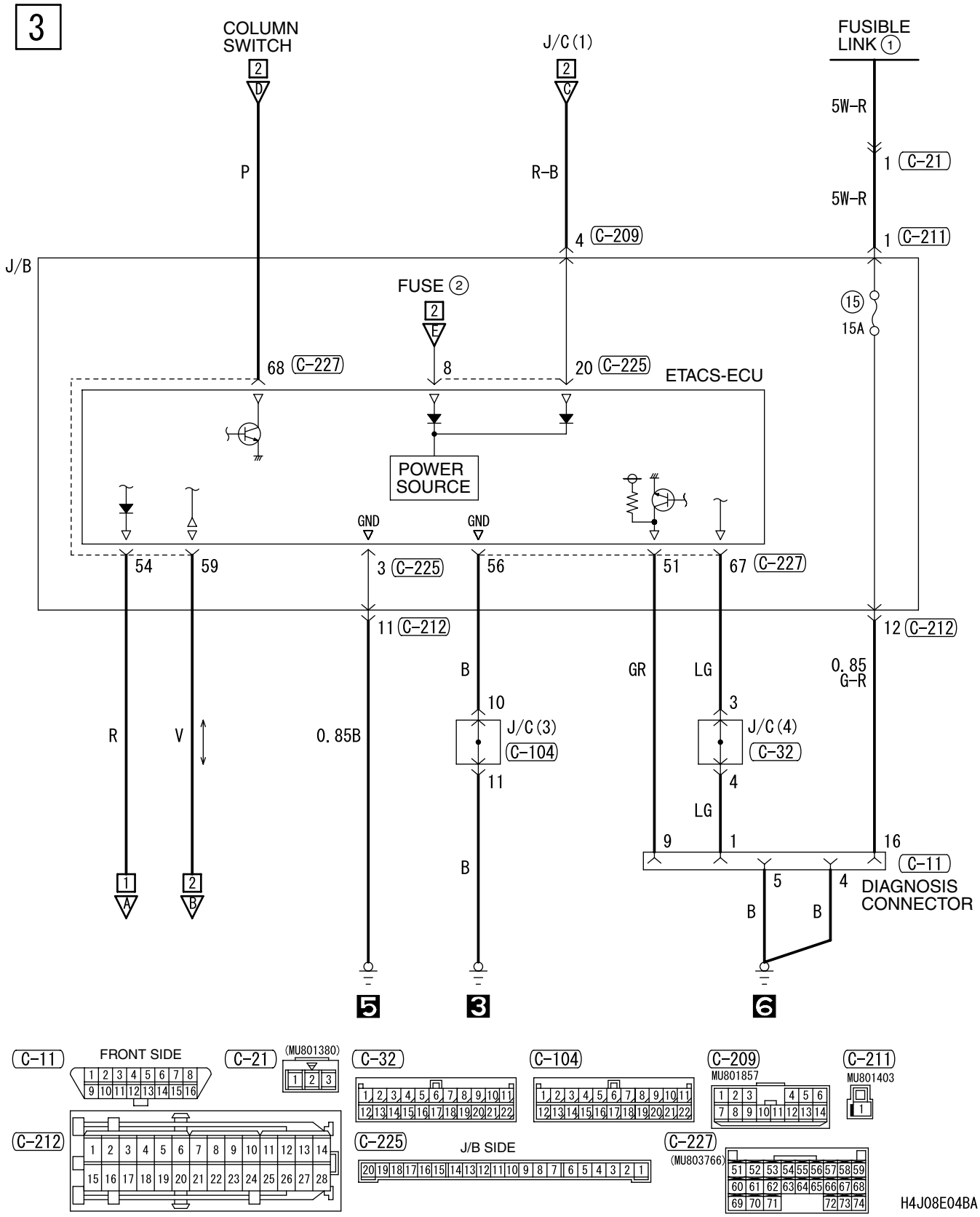

NOTES

FRONT FOG LAMP <RHD>

M1901011900157

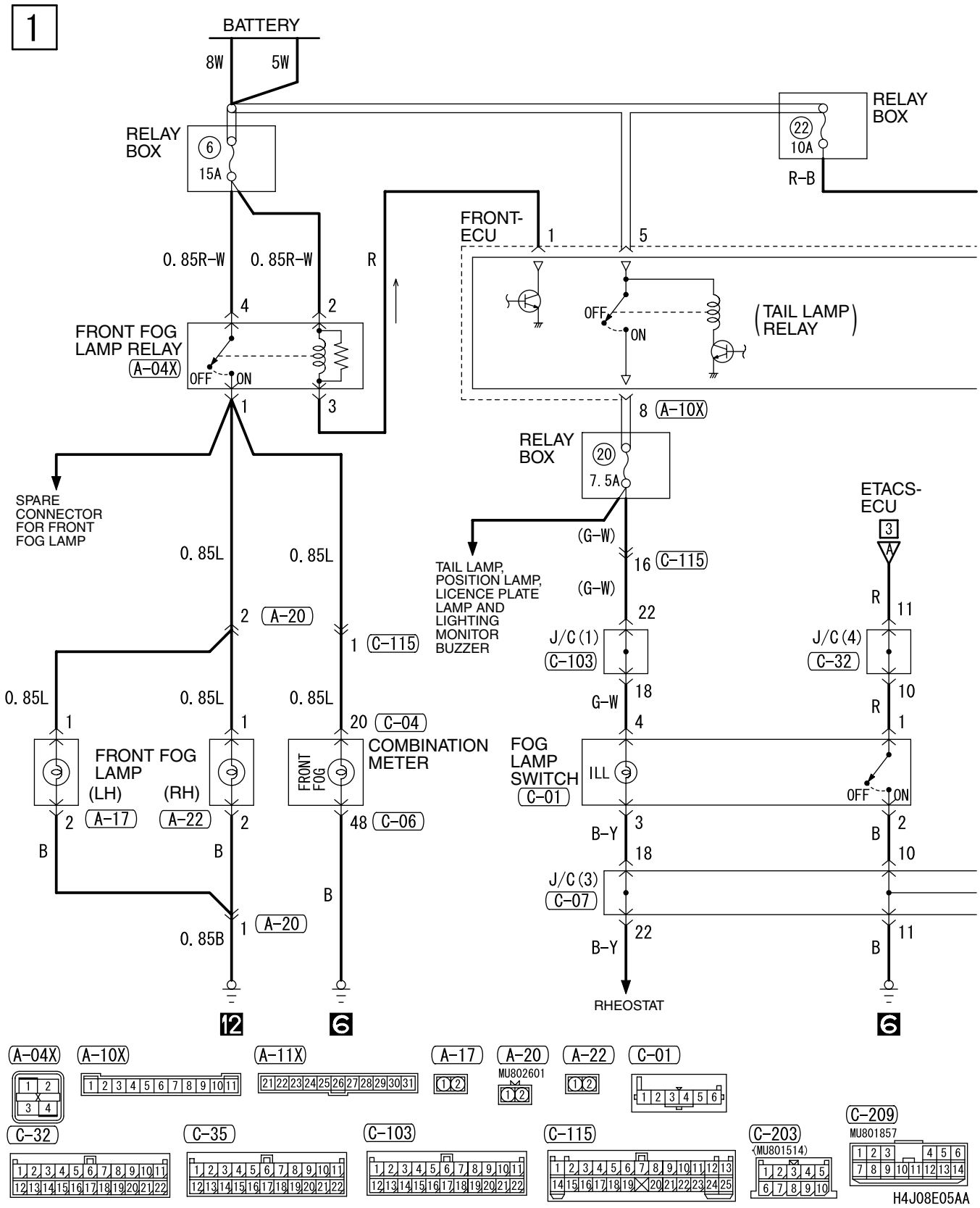

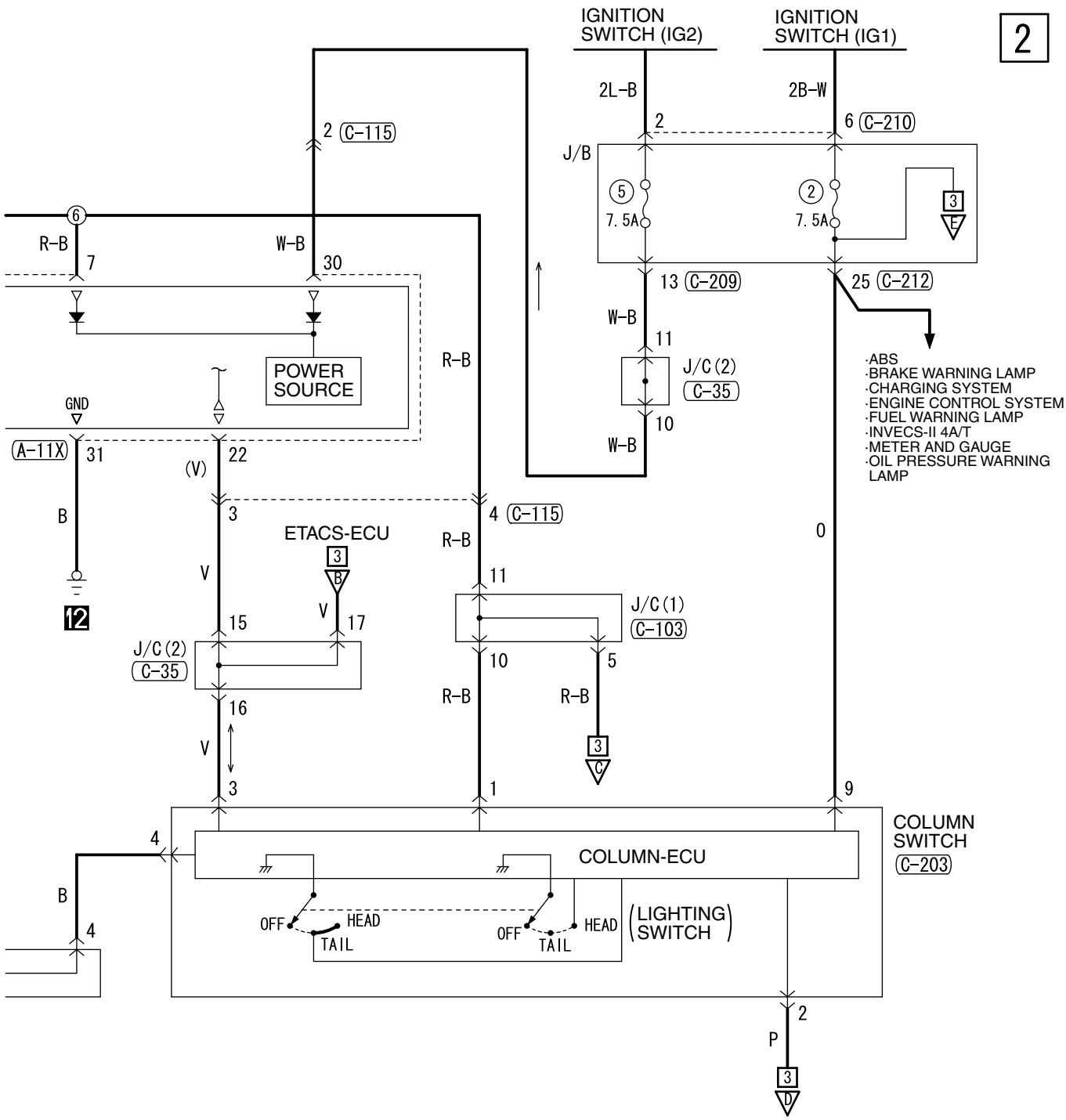
IGNITION SWITCH (IG2)
IGNITION SWITCH (IG1)
2
2L-B
2B-W
2 (C-115)
6 (C-210)
J/B
5
7.5A
2
7.5A
3
E
6
R-B
7
W-B
30
13 (C-209)
25 (C-212)
W-B
11
R-B
POWER SOURCE
J/C (2)
(C-35)
10
W-B
·ABS
·BRAKE WARNING LAMP
·CHARGING SYSTEM
·ENGINE CONTROL SYSTEM
·FUEL WARNING LAMP
·INVECS-II 4A/T
·METER AND GAUGE
·OIL PRESSURE WARNING LAMP
GND
(A-11X)
31
22
(V)
B
3
4 (C-115)
ETACS-ECU
R-B
0
V
3
B
11
12
V
17
15
J/C (1)
(C-103)
J/C (2)
(C-35)
10
5
16
R-B
R-B
V
3
C
3
1
9
COLUMN SWITCH
(C-203)
4
COLUMN-ECU
B
OFF
HEAD
TAIL
OFF
HEAD
TAIL
(LIGHTING SWITCH)
4
2
P
3
D
C-04
C-06
C-07
C-210
MU801331
C-212
Wire colour code
B : Black LG : Light green G : Green L : Blue
W : White Y : Yellow SB : Sky blue BR : Brown
O : Orange GR : Gray R : Red P : Pink V : Violet
H4J08E05AB

FRONT FOG LAMP <RHD> (CONTINUED)

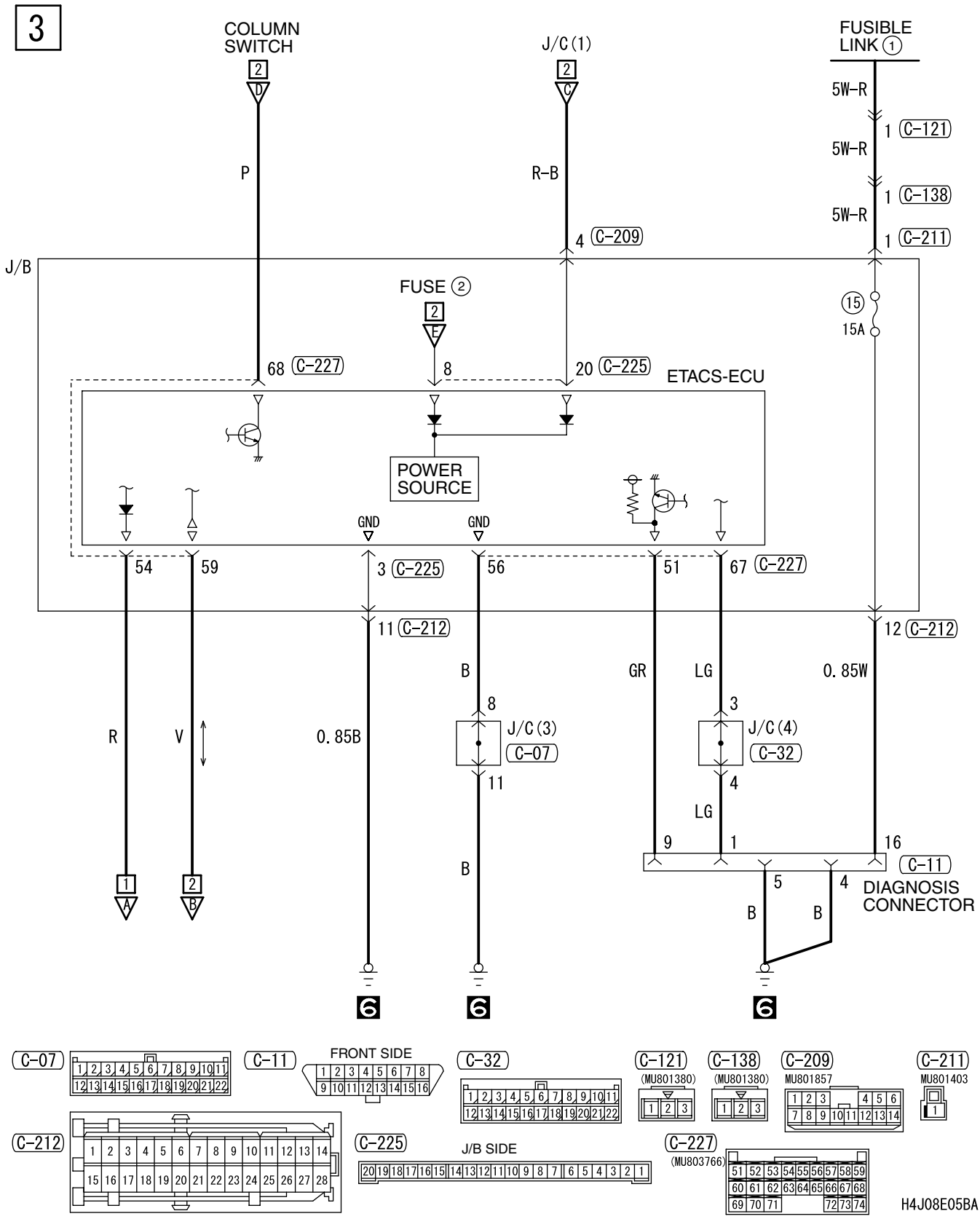

NOTES

ROOM LAMP AND LUGGAGE COMPARTMENT LAMP <SEDAN (LHD)>

M1901017800017

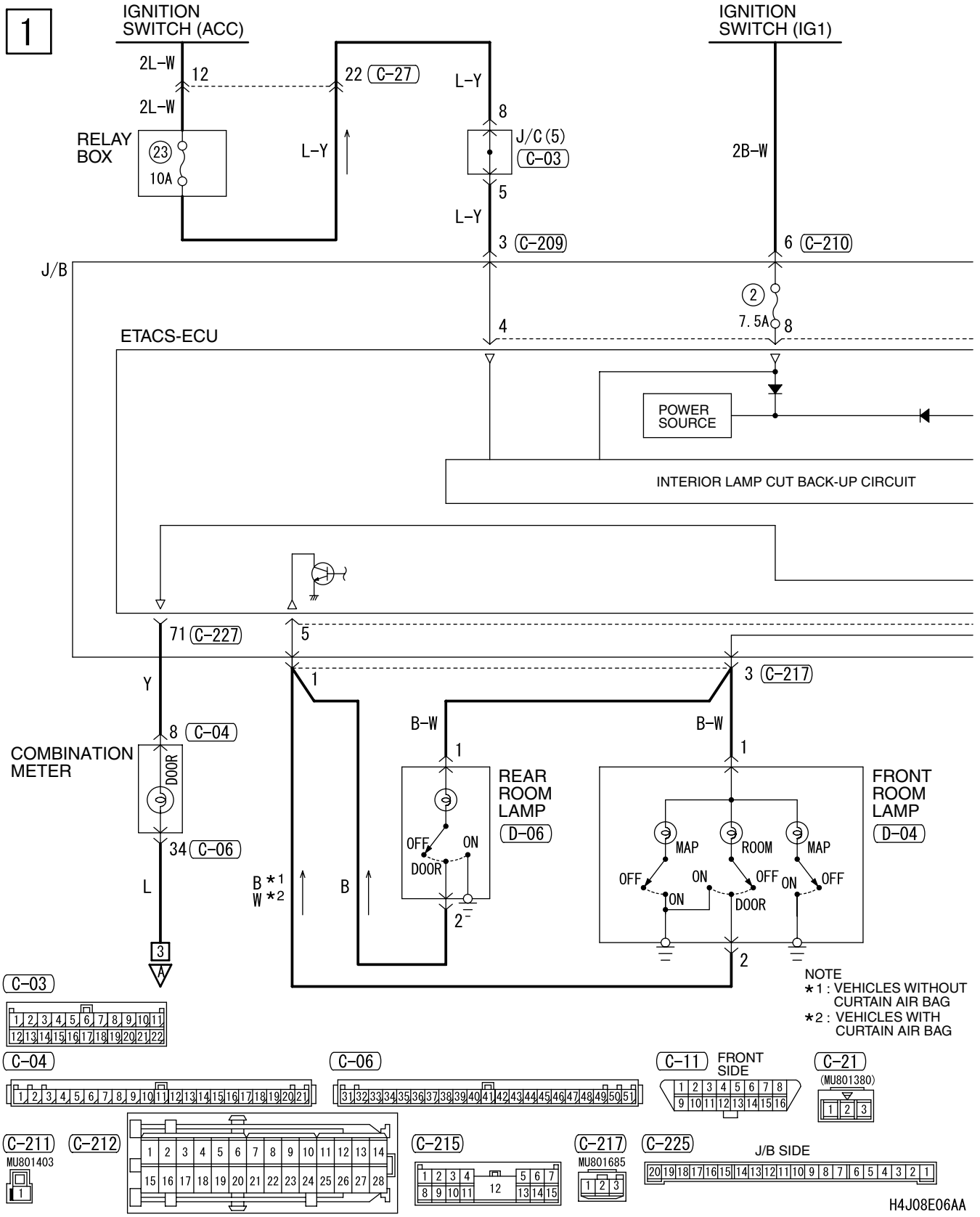

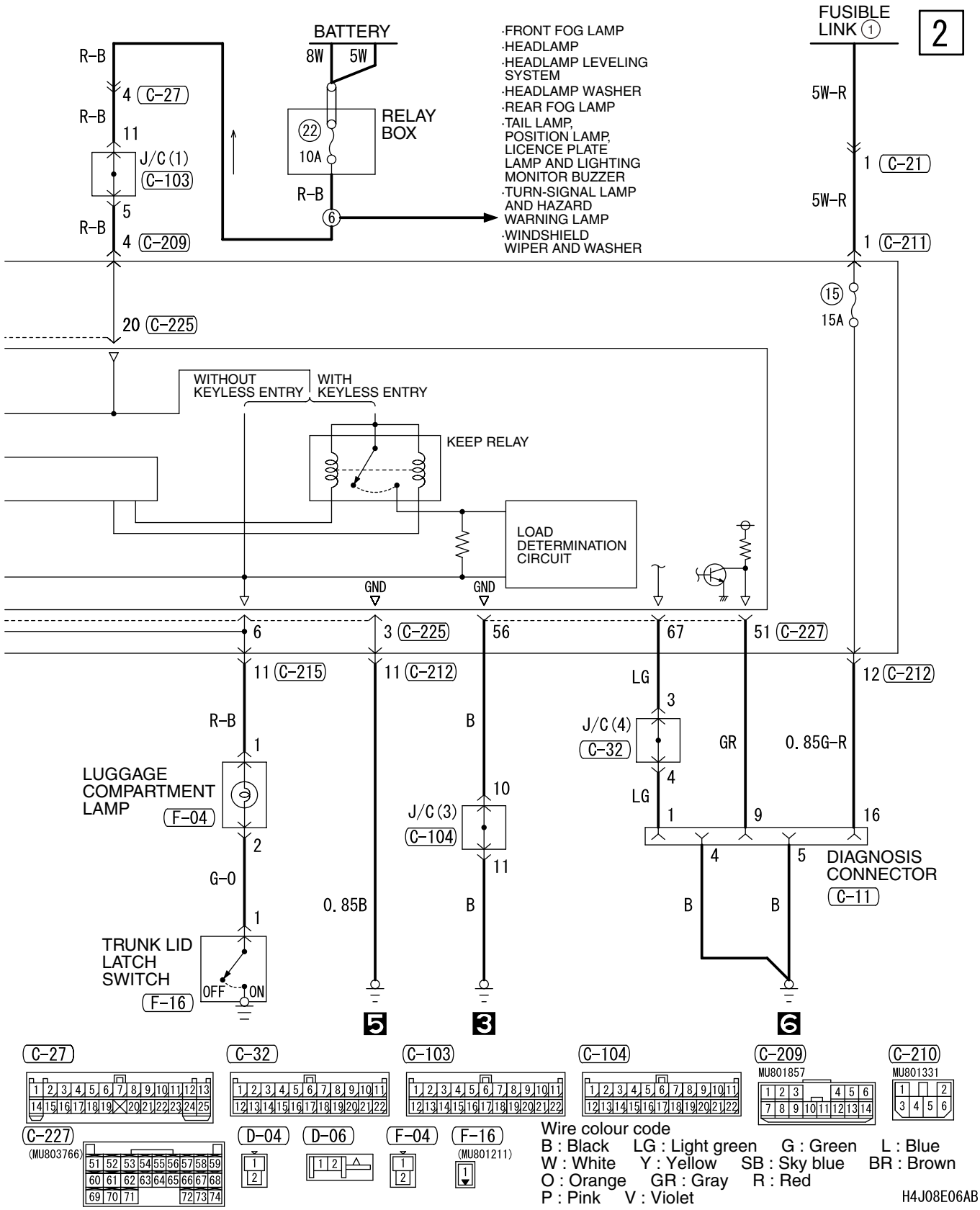
BATTERY
8W
5W
RELAY BOX
22
10A
R-B
6
·FRONT FOG LAMP
·HEADLAMP
·HEADLAMP LEVELING SYSTEM
·HEADLAMP WASHER
·REAR FOG LAMP
·TAIL LAMP, POSITION LAMP, LICENCE PLATE LAMP AND LIGHTING MONITOR BUZZER
·TURN-SIGNAL LAMP AND HAZARD WARNING LAMP
·WINDSHIELD WIPER AND WASHER
FUSIBLE LINK 1
2
5W-R
1 C-21
5W-R
1 C-211
15
15A
R-B
4 C-27
R-B
11
J/C (1)
C-103
5
R-B
4 C-209
20 C-225
WITHOUT KEYLESS ENTRY
WITH KEYLESS ENTRY
KEEP RELAY
LOAD DETERMINATION CIRCUIT
GND
GND
6
3 C-225
56
67
51 C-227
11 C-215
11 C-212
12 C-212
R-B
1
LUGGAGE COMPARTMENT LAMP
F-04
2
G-0
1
TRUNK LID LATCH SWITCH
F-16
OFF
ON
0.85B
B
LG
3
J/C (4)
C-32
4
LG
GR
0.85G-R
B
10
J/C (3)
C-104
11
B
1
9
16
4
5
DIAGNOSIS CONNECTOR
C-11
B
B
5
3
6
C-27
C-32
C-103
C-104
C-209
MU801857
C-210
MU801331
C-227
(MU803766)
D-04
D-06
F-04
F-16
(MU801211)
Wire colour code
B : Black LG : Light green G : Green L : Blue
W : White Y : Yellow SB : Sky blue BR : Brown
O : Orange GR : Gray R : Red
P : Pink V : Violet
H4J08E06AB

ROOM LAMP AND LUGGAGE COMPARTMENT LAMP <SEDAN (LHD)> (CONTINUED)

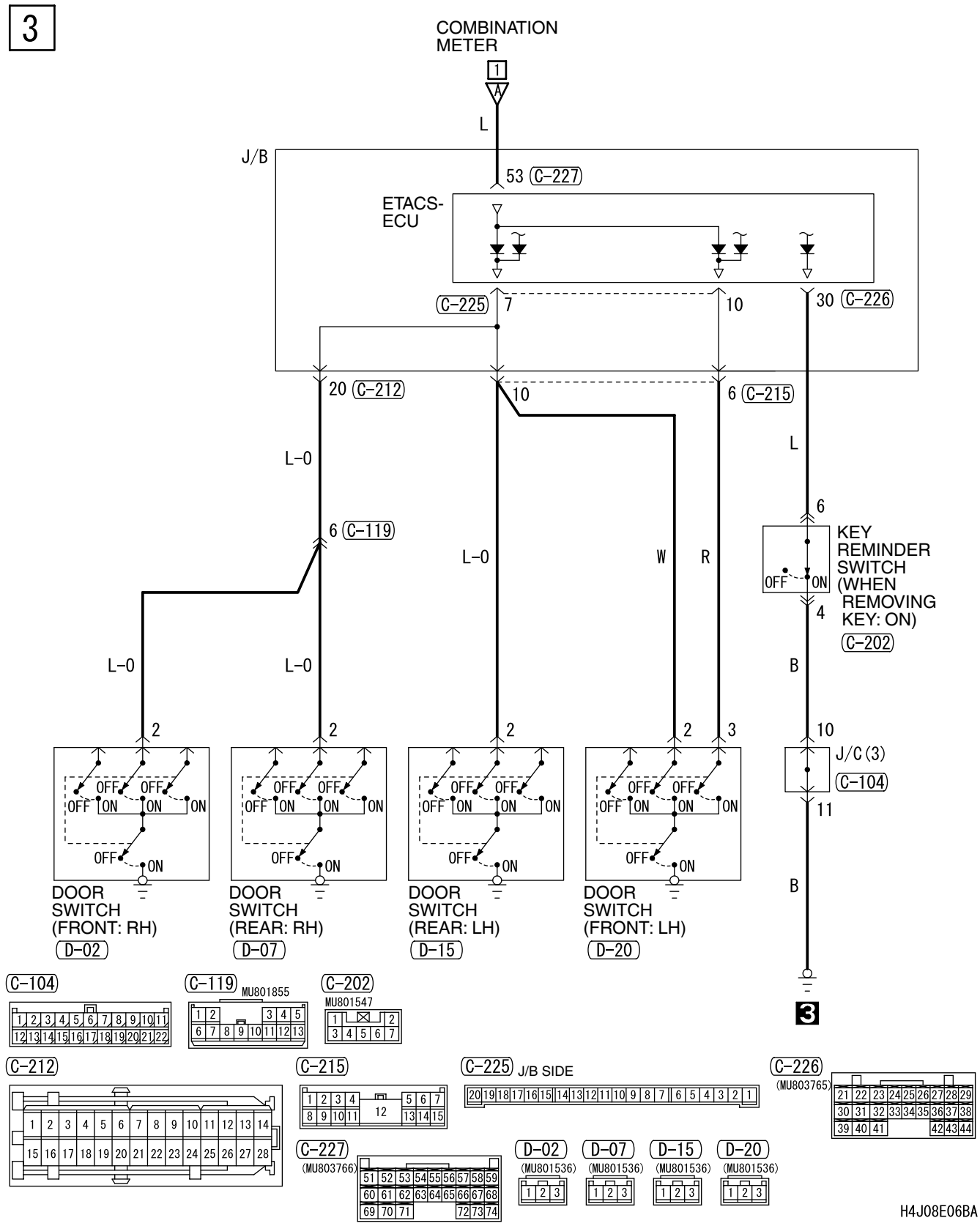

NOTES

ROOM LAMP AND LUGGAGE COMPARTMENT LAMP <SEDAN (RHD)>

M1901017800028

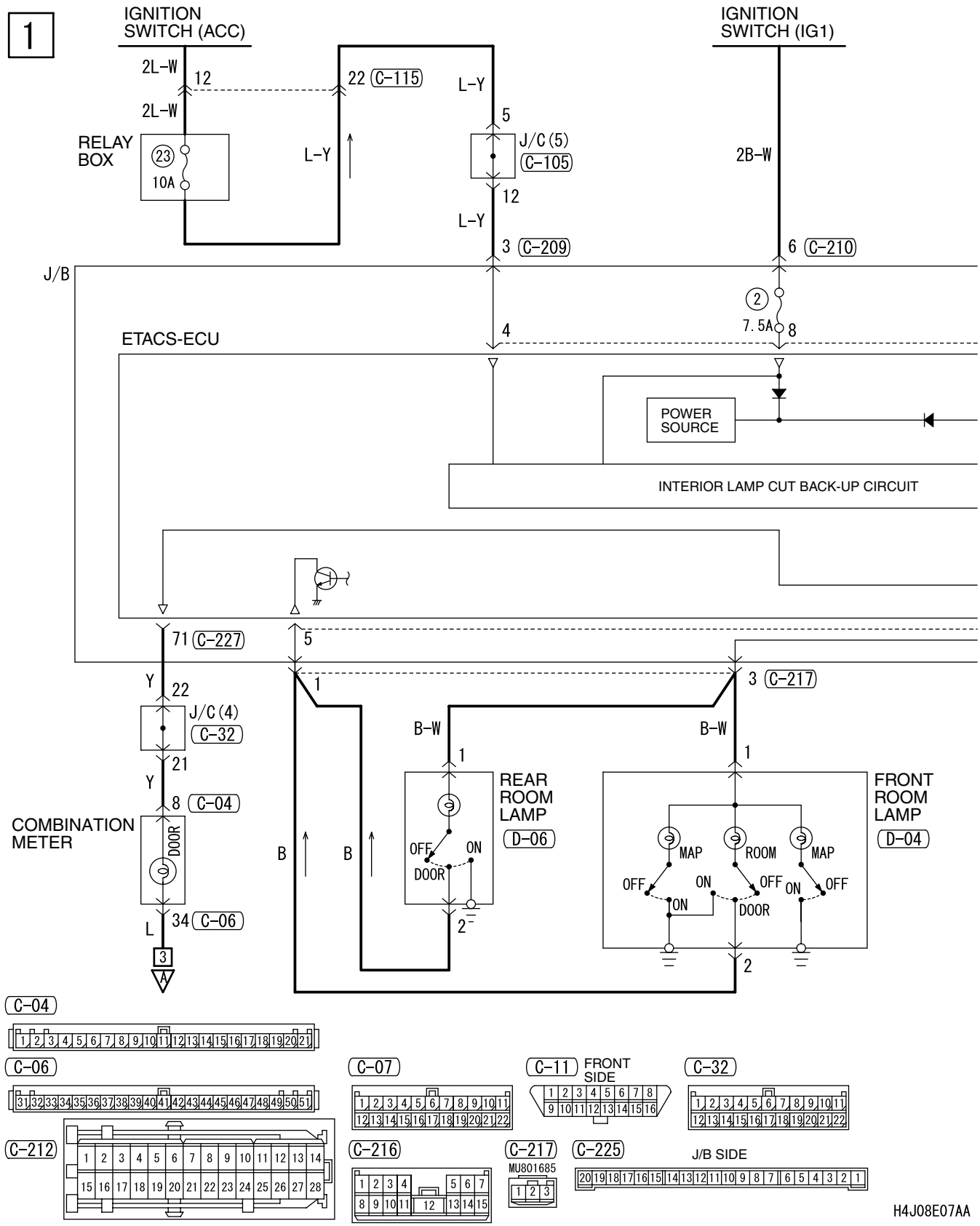

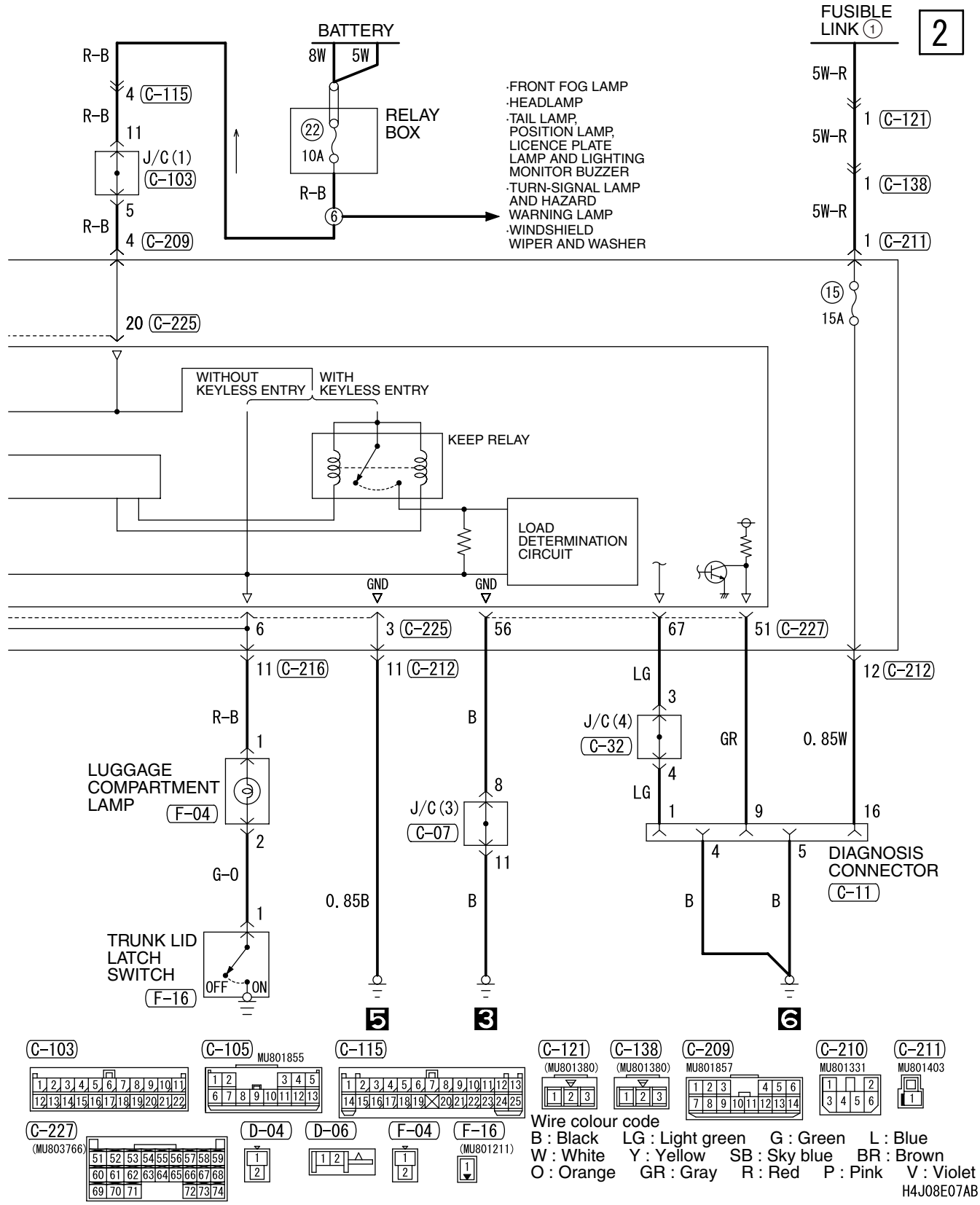
BATTERY
8W
5W
RELAY BOX
22
10A
R-B
6
·FRONT FOG LAMP
·HEADLAMP
·TAIL LAMP, POSITION LAMP, LICENCE PLATE LAMP AND LIGHTING MONITOR BUZZER
·TURN-SIGNAL LAMP AND HAZARD WARNING LAMP
·WINDSHIELD WIPER AND WASHER
FUSIBLE LINK 1
2
5W-R
1 C-121
1 C-138
1 C-211
15
15A
R-B
4 C-115
11
J/C (1)
C-103
5
4 C-209
20 C-225
WITHOUT KEYLESS ENTRY
WITH KEYLESS ENTRY
KEEP RELAY
LOAD DETERMINATION CIRCUIT
GND
6
3 C-225
56
67
51 C-227
11 C-216
11 C-212
12 C-212
LG
3
J/C (4)
C-32
4
GR
0.85W
B
8
J/C (3)
C-07
11
1
9
16
LUGGAGE COMPARTMENT LAMP
F-04
2
G-O
0.85B
4
5
DIAGNOSIS CONNECTOR
C-11
TRUNK LID LATCH SWITCH
F-16
OFF
ON
5
3
6
C-103
C-105
MU801855
C-115
C-121
(MU801380)
C-138
(MU801380)
C-209
MU801857
C-210
MU801331
C-211
MU801403
C-227
(MU803766)
D-04
D-06
F-04
F-16
(MU801211)
Wire colour code
B : Black LG : Light green G : Green L : Blue
W : White Y : Yellow SB : Sky blue BR : Brown
O : Orange GR : Gray R : Red P : Pink V : Violet
H4J08E07AB

ROOM LAMP AND LUGGAGE COMPARTMENT LAMP <SEDAN (RHD)> (CONTINUED)

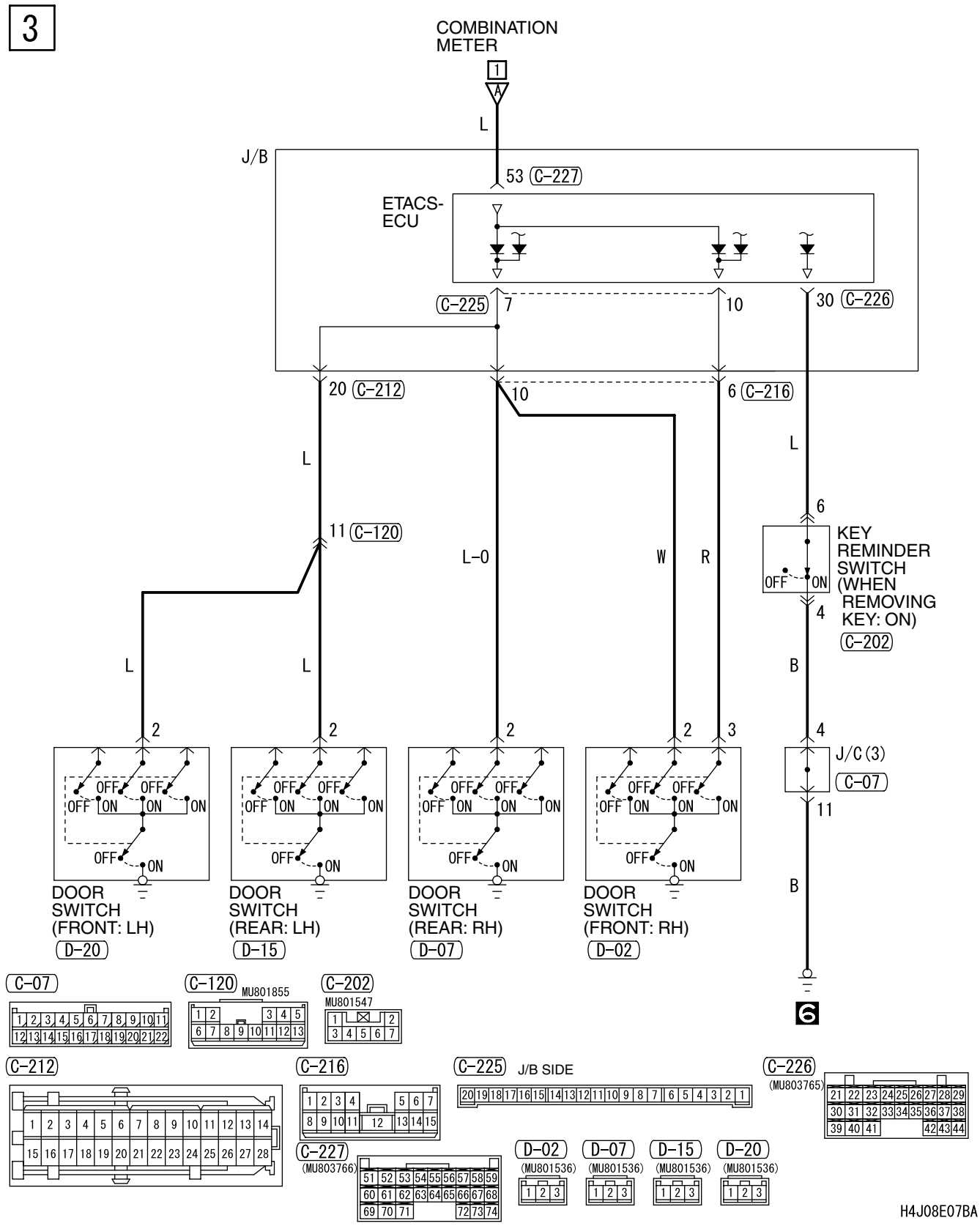

NOTES

ROOM LAMP,PERSONAL LAMP AND LUGGAGE ROOM LAMP <WAGON (LHD)>

M1901017900014

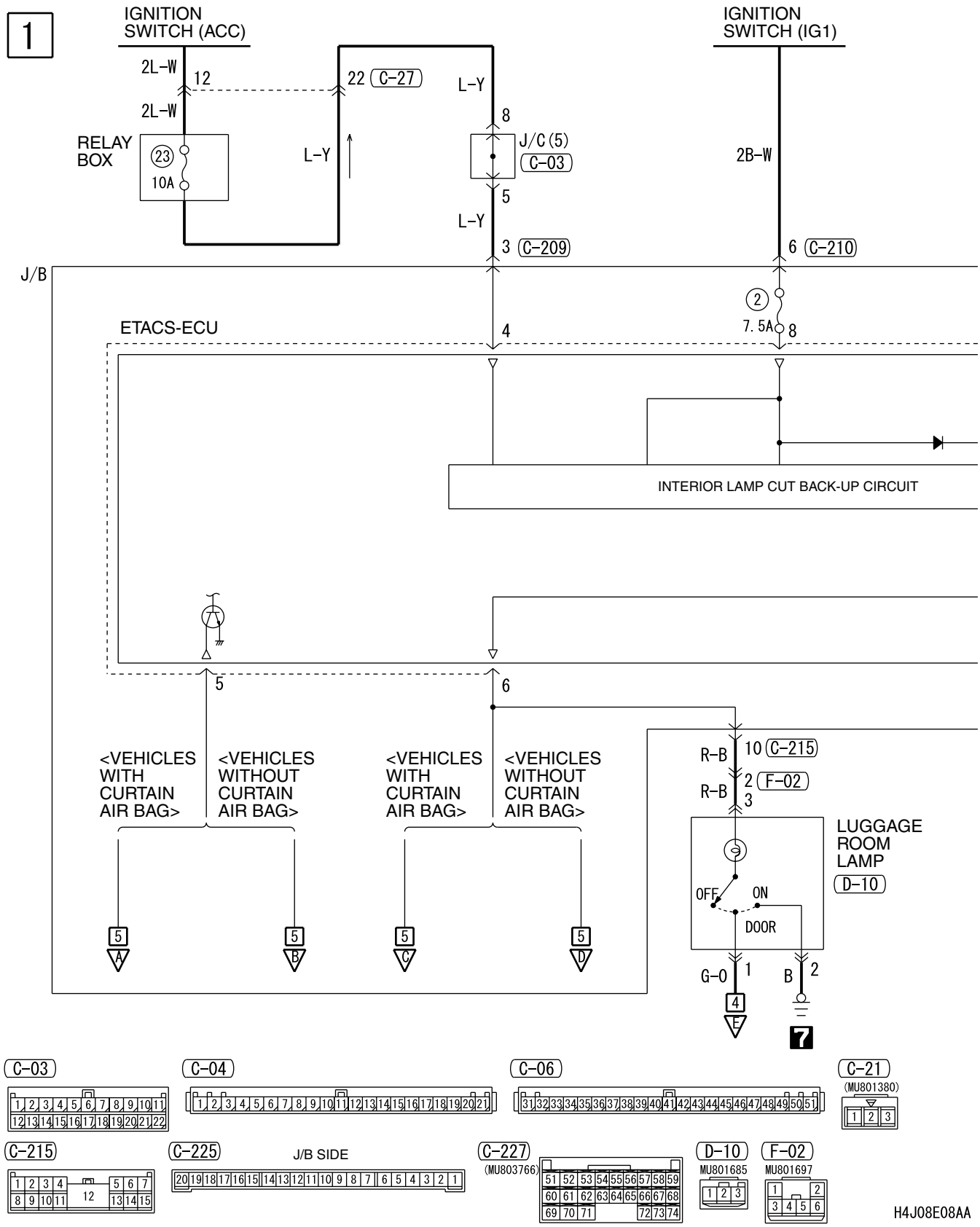

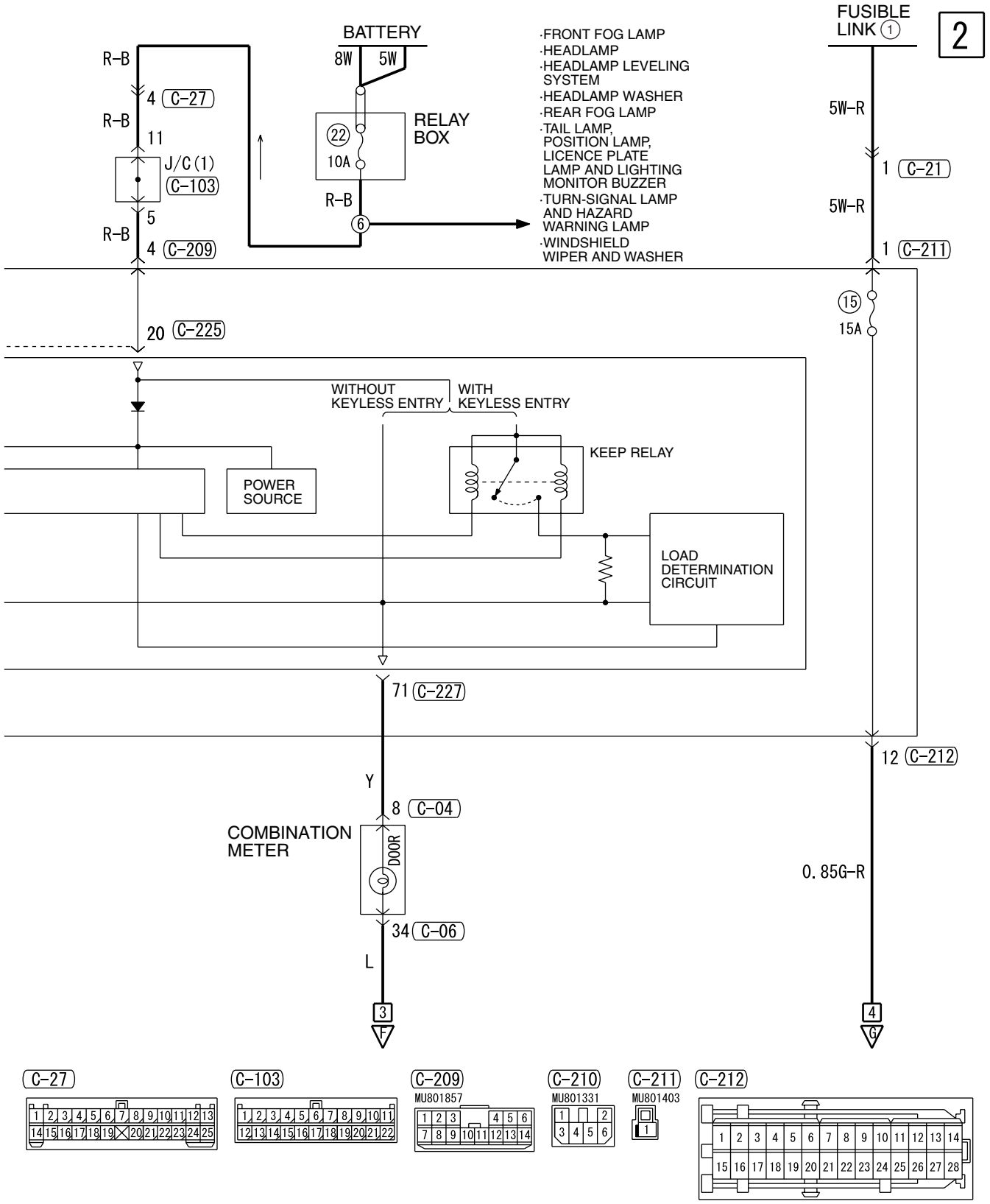
BATTERY
8W
5W
RELAY BOX
22
10A
R-B
6
·FRONT FOG LAMP
·HEADLAMP
·HEADLAMP LEVELING SYSTEM
·HEADLAMP WASHER
·REAR FOG LAMP
·TAIL LAMP, POSITION LAMP, LICENCE PLATE LAMP AND LIGHTING MONITOR BUZZER
·TURN-SIGNAL LAMP AND HAZARD WARNING LAMP
·WINDSHIELD WIPER AND WASHER
FUSIBLE LINK 1
2
5W-R
1 C-21
5W-R
1 C-211
15
15A
R-B
4 C-27
R-B
11
J/C (1)
C-103
5
R-B
4 C-209
20 C-225
WITHOUT KEYLESS ENTRY
WITH KEYLESS ENTRY
KEEP RELAY
POWER SOURCE
LOAD DETERMINATION CIRCUIT
71 C-227
12 C-212
Y
8 C-04
COMBINATION METER
DOOR
0.85G-R
34 C-06
L
3
F
4
G
C-27
C-103
C-209
MU801857
C-210
MU801331
C-211
MU801403
C-212
H4J08E08AB

ROOM LAMP,PERSONAL LAMP AND LUGGAGE ROOM LAMP <WAGON (LHD)> (CONTINUED)

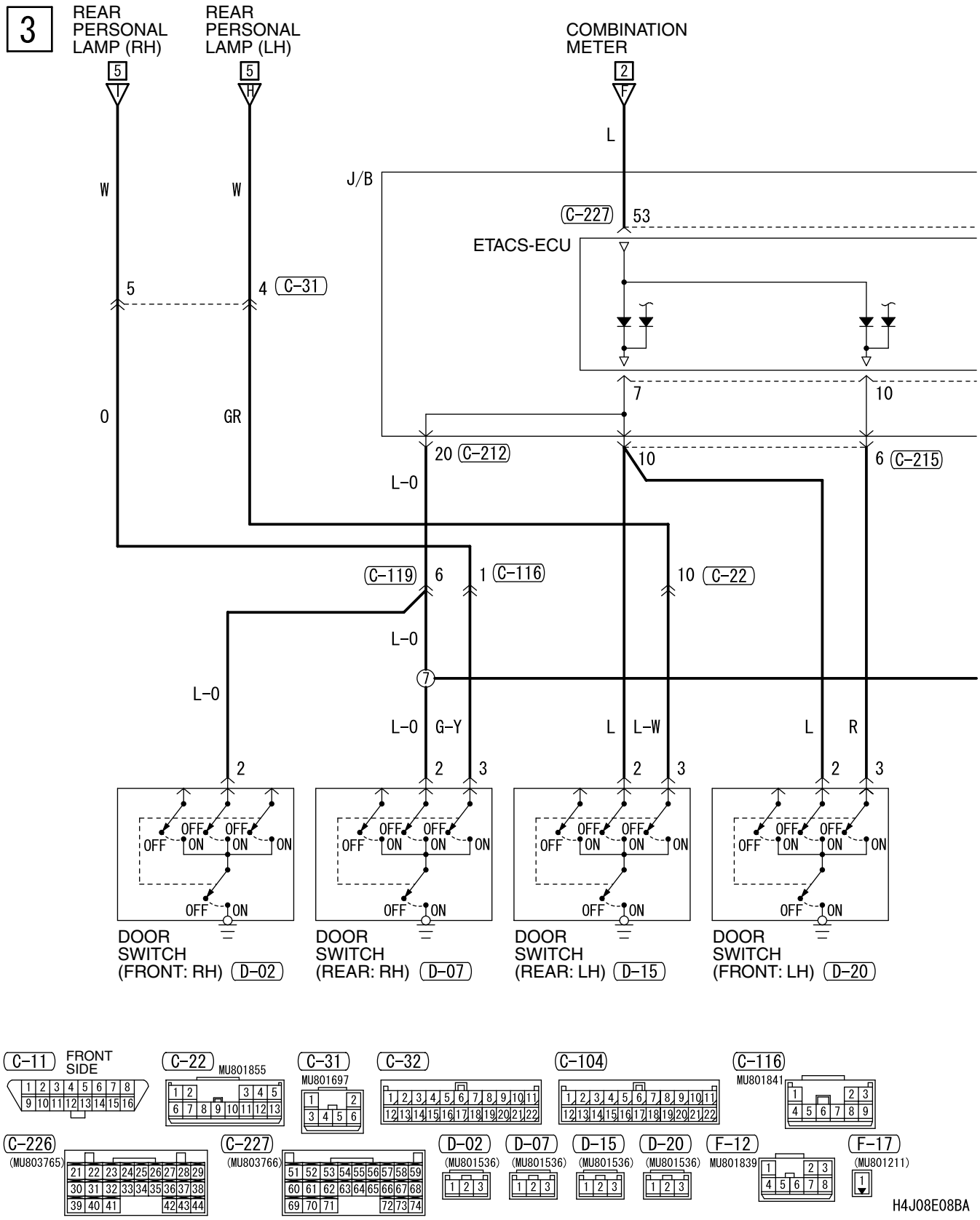

4

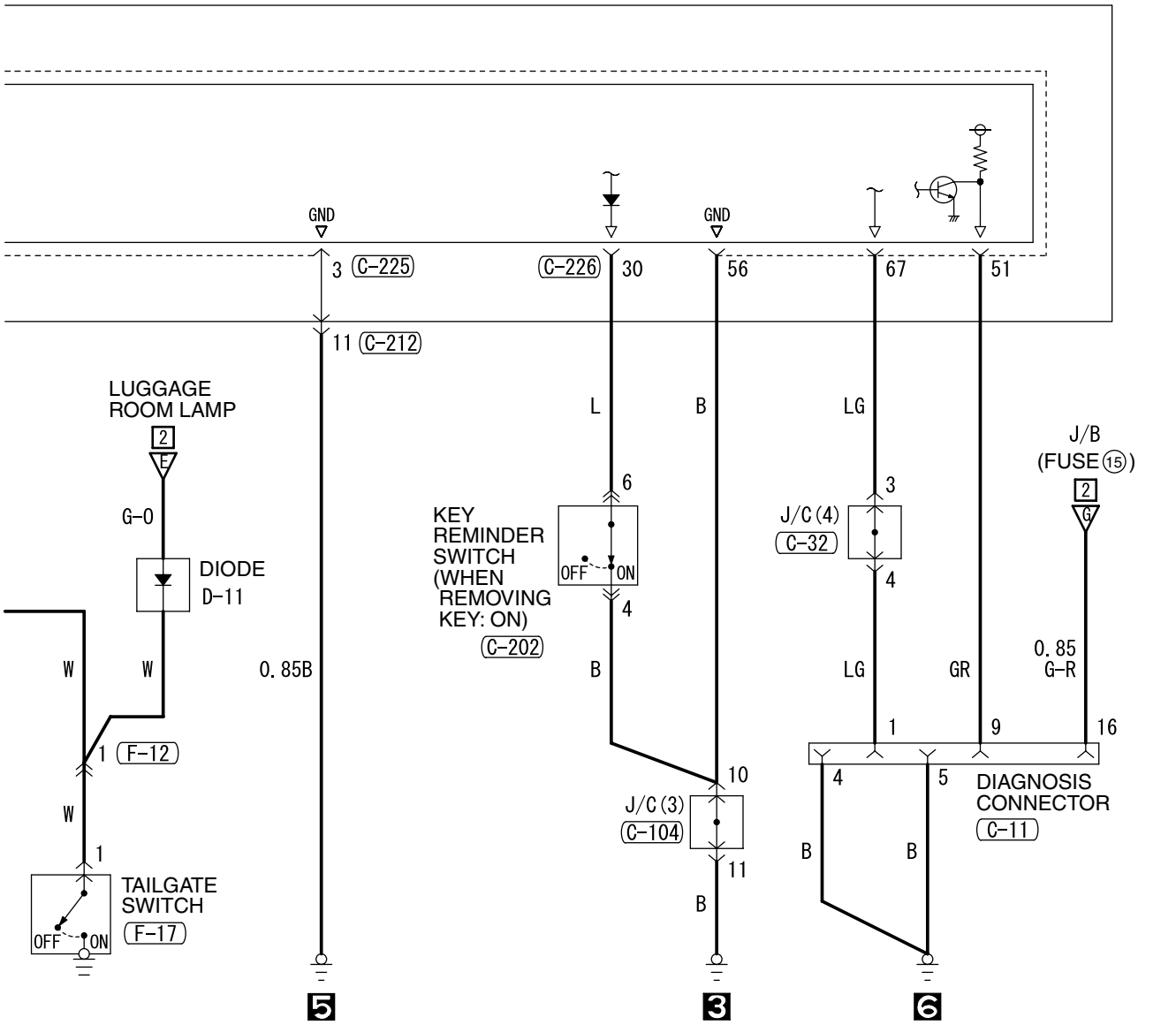
GND
GND
3 C-225
C-226 30
56
67
51
11 C-212
LUGGAGE
ROOM LAMP
2
E
G-O
DIODE
D-11
W
W
0.85B
1 F-12
W
1
TAILGATE
SWITCH
F-17
OFF
ON
L
B
LG
6
KEY
REMINDER
SWITCH
(WHEN
REMOVING
KEY: ON)
C-202
OFF
ON
4
B
10
J/C (3)
C-104
11
B
3
J/C (4)
C-32
4
LG
GR
1
9
4
5
B
B
J/B
(FUSE 15)
2
G
0.85
G-R
16
DIAGNOSIS
CONNECTOR
C-11
5
3
6
C-119
MU801855
C-202
MU801547
C-212
C-215
C-225
J/B SIDE
Wire colour code
B : Black LG : Light green G : Green L : Blue
W : White Y : Yellow SB : Sky blue BR : Brown
O : Orange GR : Gray R : Red P : Pink V : Violet
H4J08E08BB

ROOM LAMP,PERSONAL LAMP AND LUGGAGE ROOM LAMP <WAGON (LHD)> (CONTINUED)

5

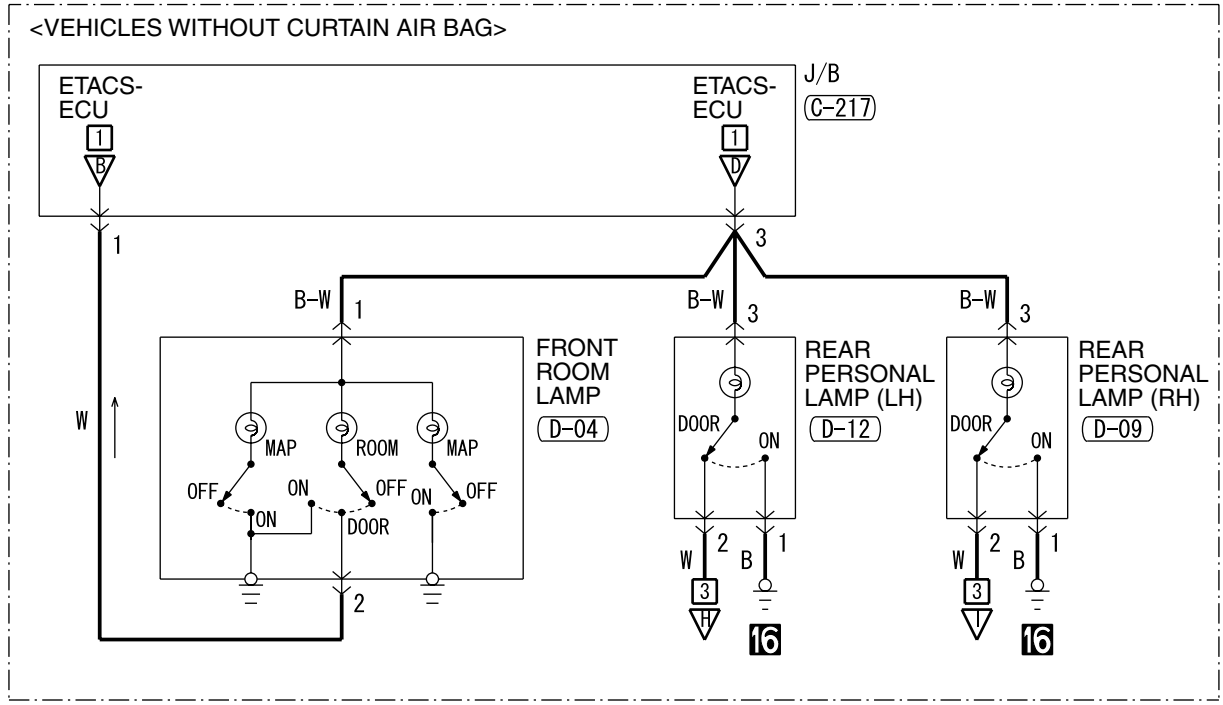

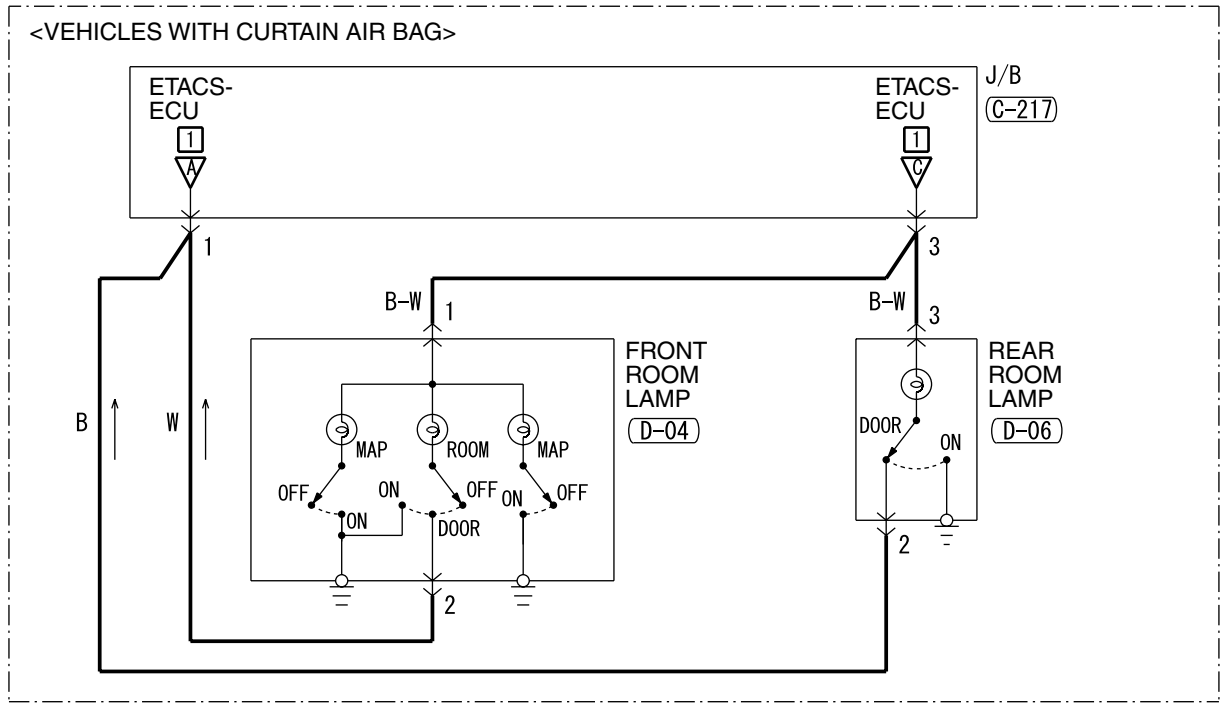

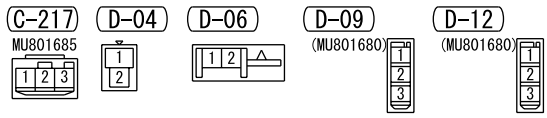

H4J08E08CA

NOTES

ROOM LAMP,PERSONAL LAMP AND LUGGAGE ROOM LAMP <WAGON (RHD)>

M1901017900025

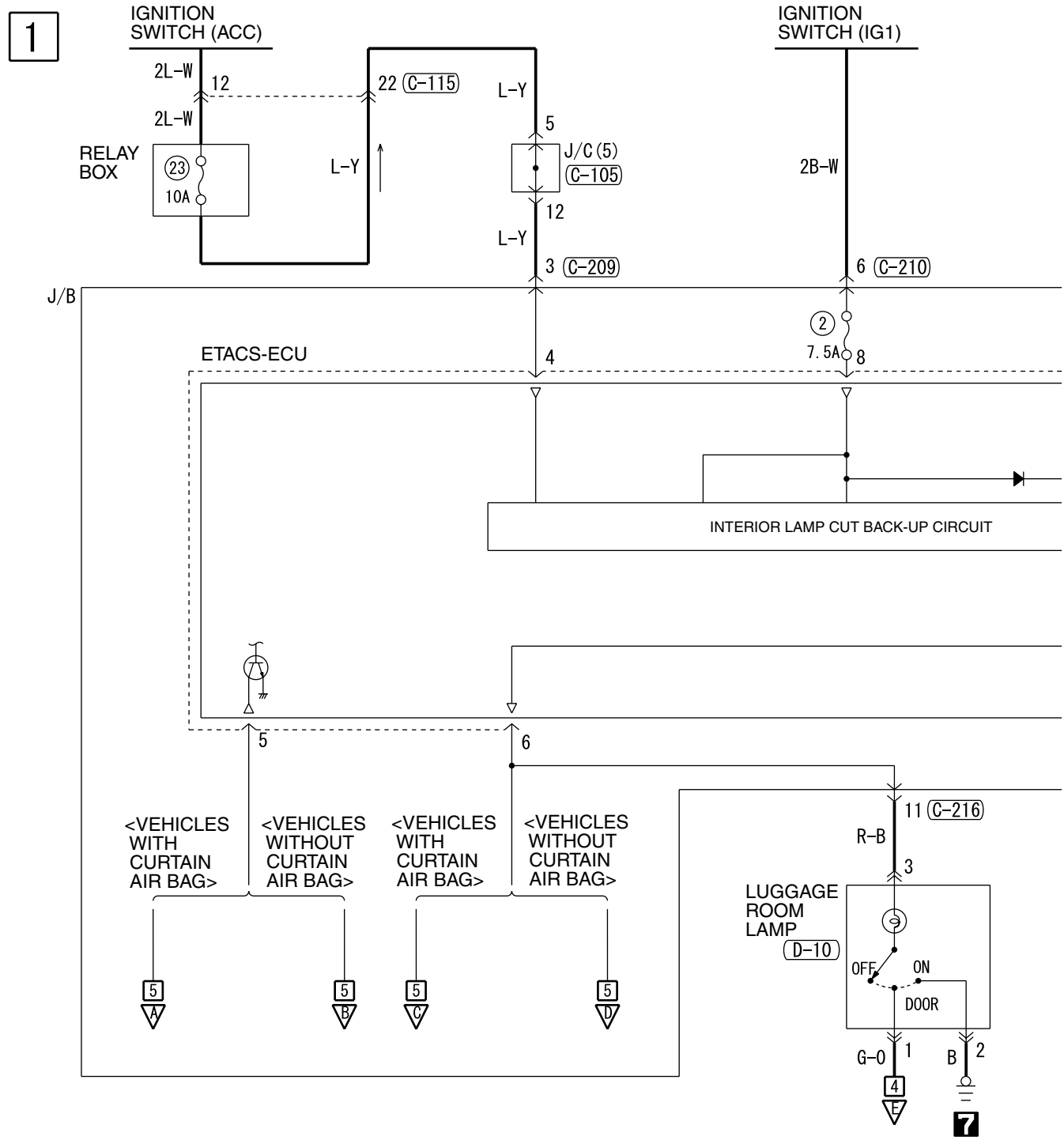

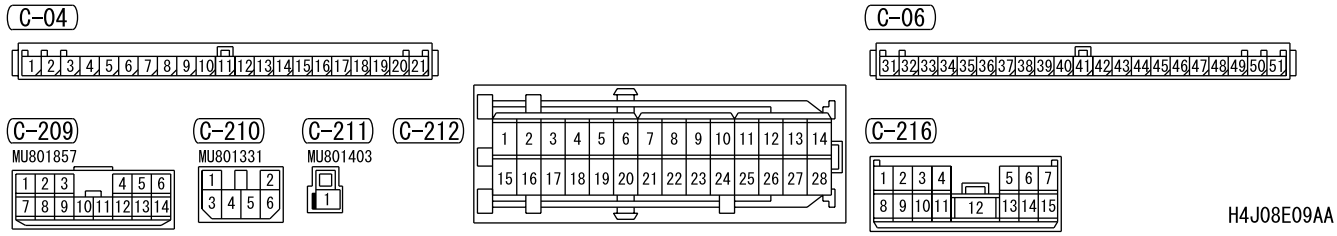

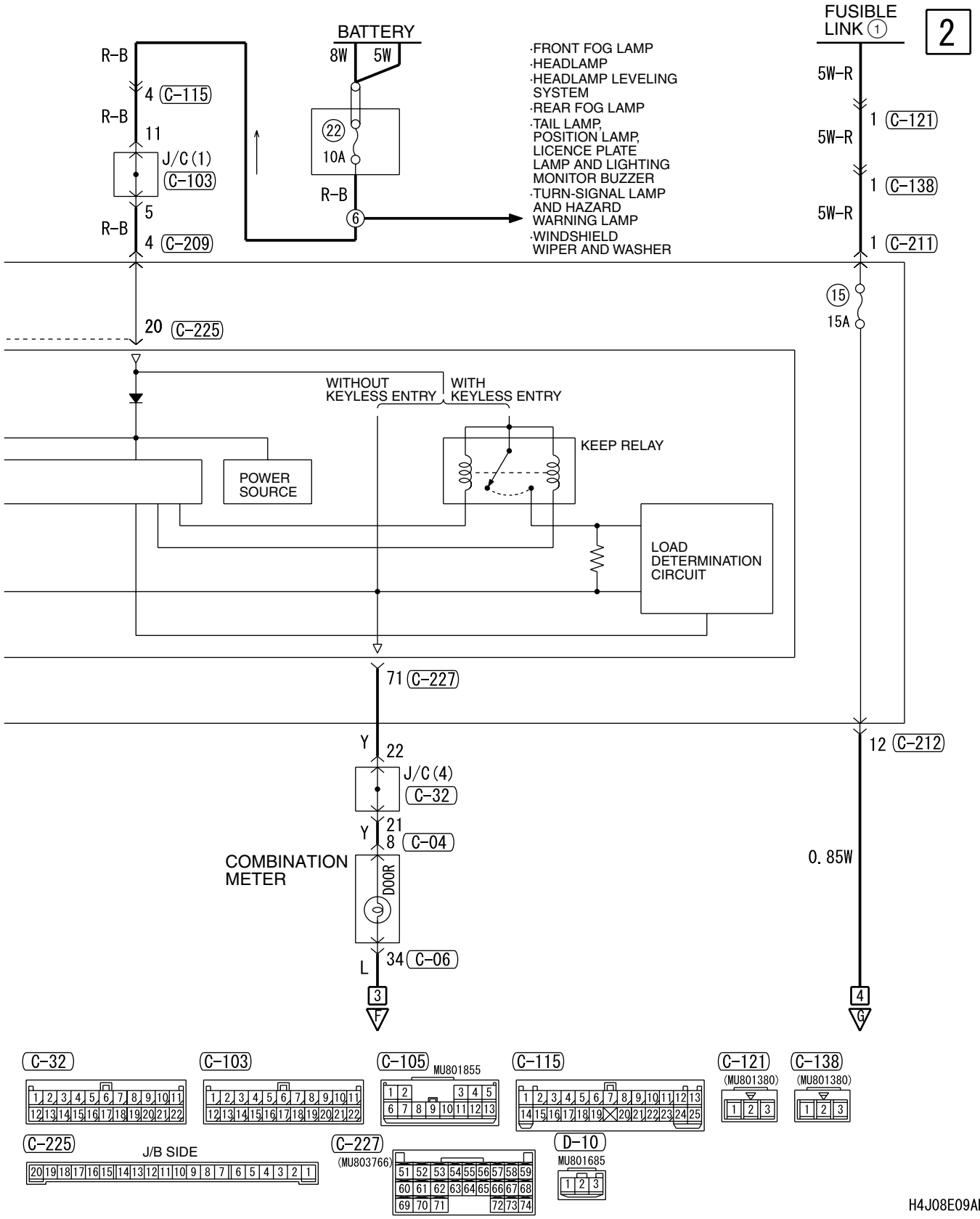
BATTERY
8W
5W
22
10A
6
R-B
4 C-115
11
J/C (1)
C-103
5
4 C-209
20 C-225
·FRONT FOG LAMP
·HEADLAMP
·HEADLAMP LEVELING SYSTEM
·REAR FOG LAMP
·TAIL LAMP, POSITION LAMP, LICENCE PLATE LAMP AND LIGHTING MONITOR BUZZER
·TURN-SIGNAL LAMP AND HAZARD WARNING LAMP
·WINDSHIELD WIPER AND WASHER
FUSIBLE LINK 1
2
5W-R
1 C-121
1 C-138
1 C-211
15
15A
WITHOUT KEYLESS ENTRY
WITH KEYLESS ENTRY
KEEP RELAY
POWER SOURCE
LOAD DETERMINATION CIRCUIT
71 C-227
Y
22
J/C (4)
C-32
21
8 C-04
COMBINATION METER
DOOR
34 C-06
L
3
F
12 C-212
0.85W
4
G
C-32
C-103
C-105
MU801855
C-115
C-121
(MU801380)
C-138
(MU801380)
C-225
J/B SIDE
C-227
(MU803766)
D-10
MU801685
H4J08E09AB

ROOM LAMP,PERSONAL LAMP AND LUGGAGE ROOM LAMP <WAGON (RHD)> (CONTINUED)

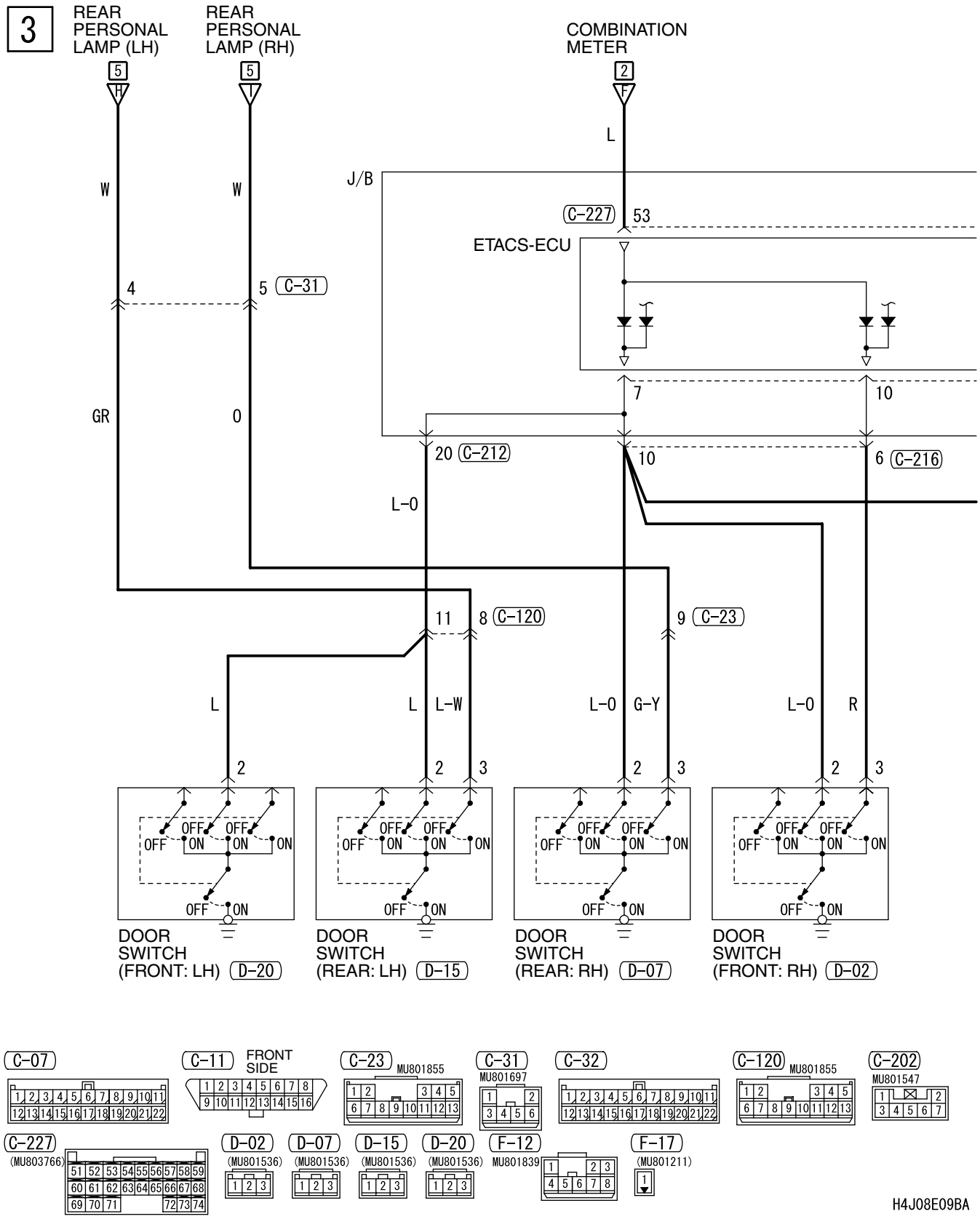

4

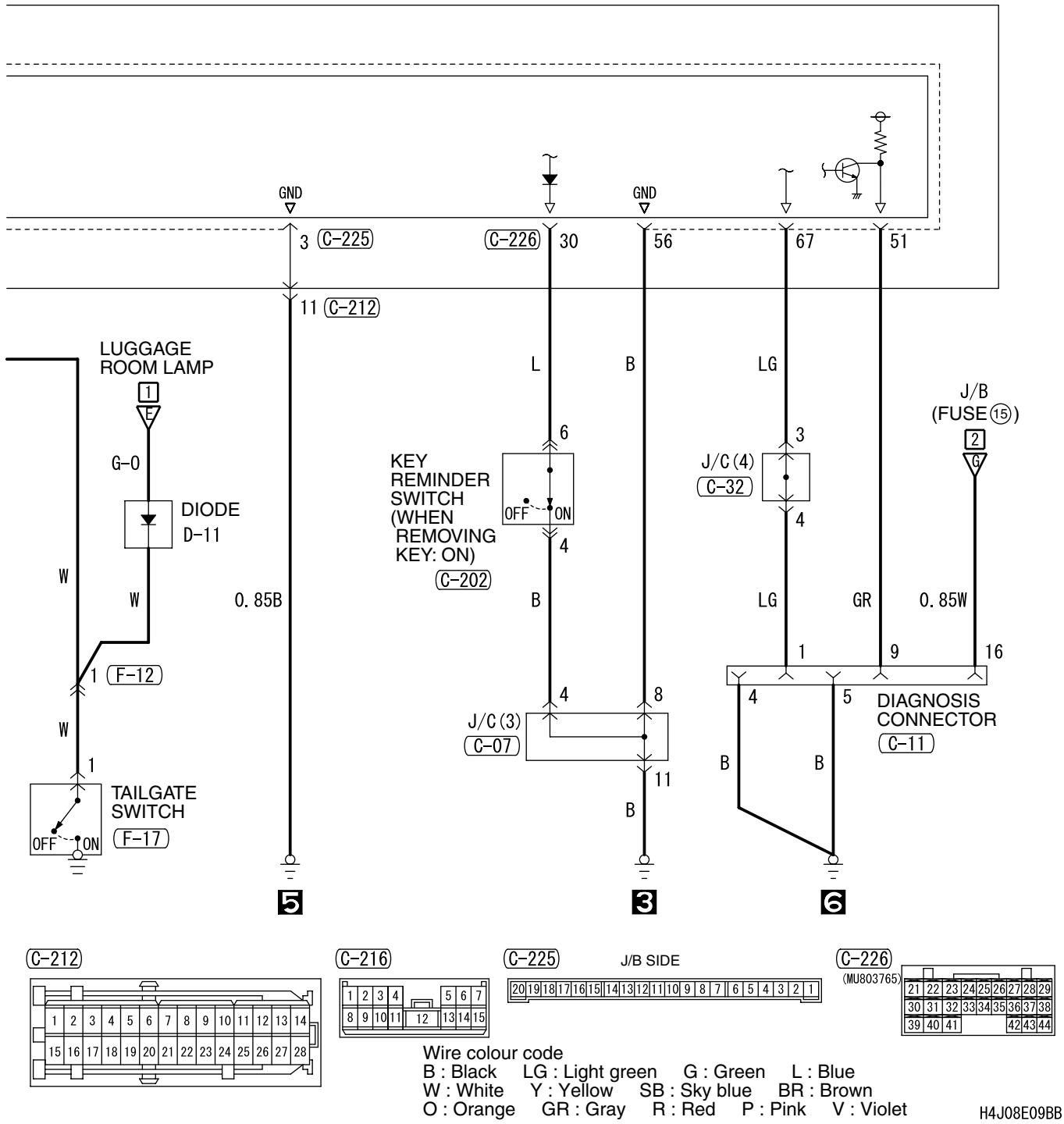

Wire colour code
B : Black LG : Light green G : Green L : Blue
W : White Y : Yellow SB : Sky blue BR : Brown
O : Orange GR : Gray R : Red P : Pink V : Violet

H4J08E09BB

ROOM LAMP,PERSONAL LAMP AND LUGGAGE ROOM LAMP <WAGON (RHD)> (CONTINUED)

5

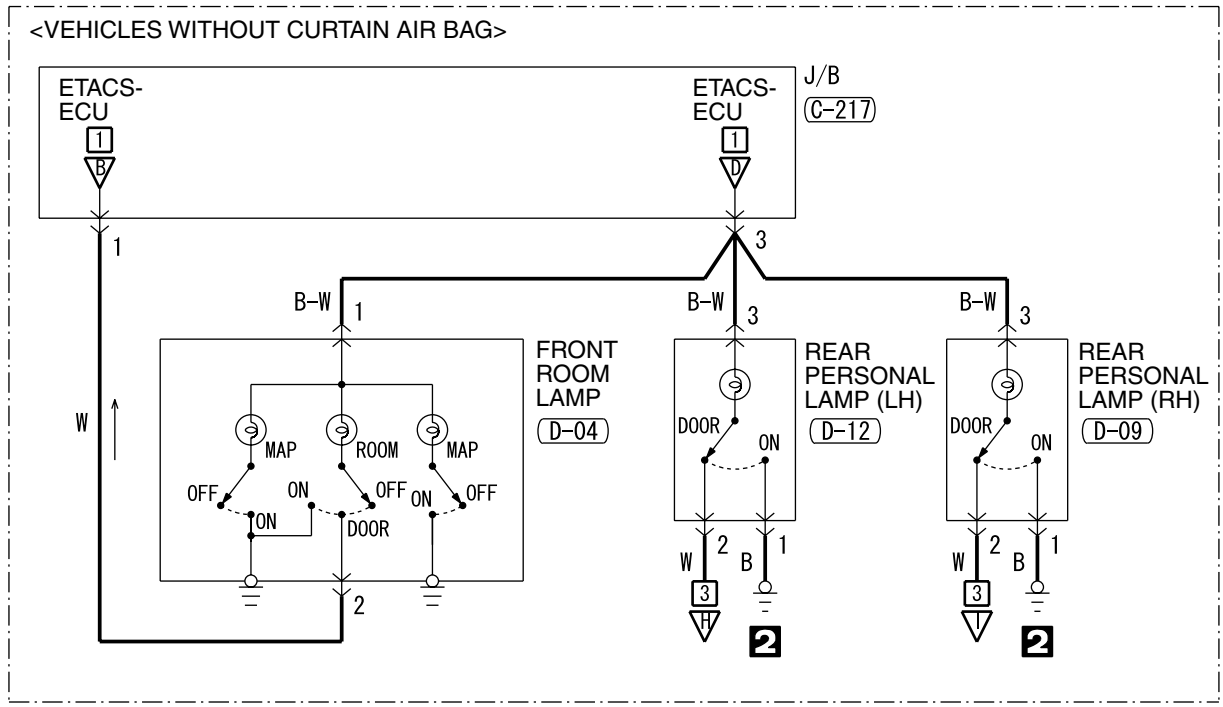

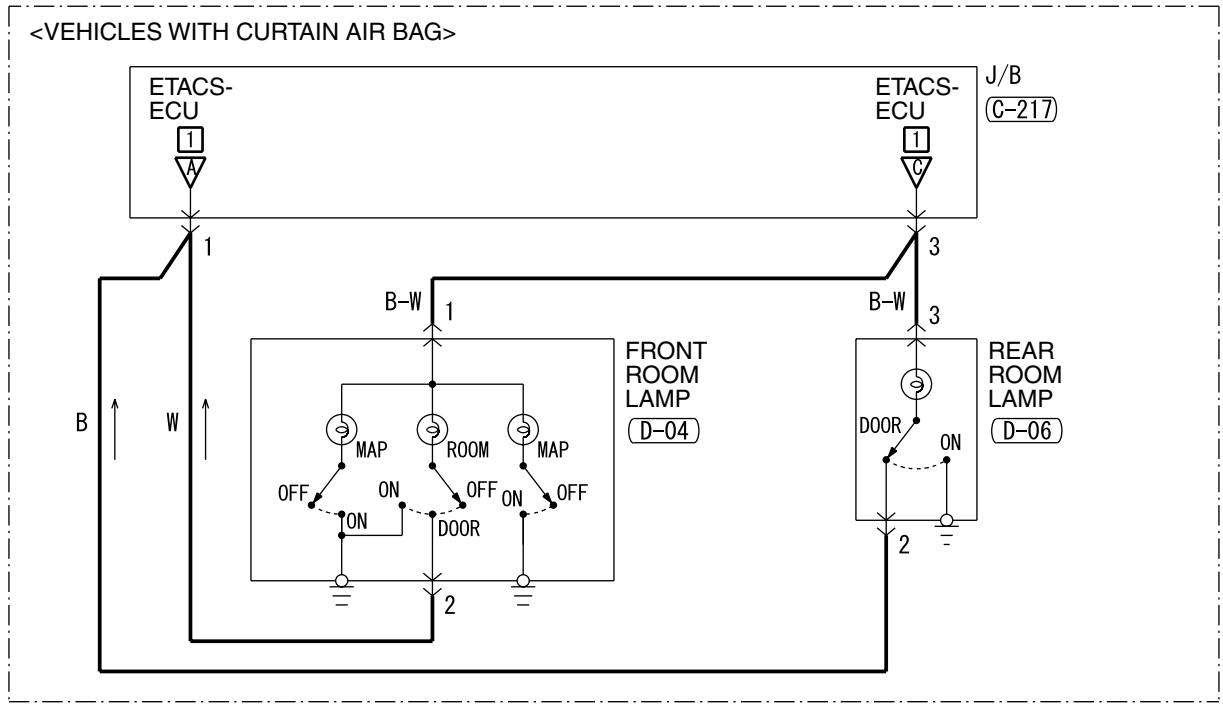

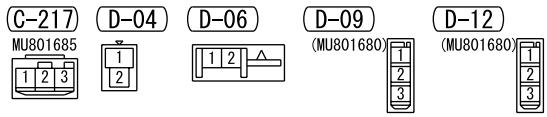

H4J08E09CA

NOTES

REAR FOG LAMP <LHD>

M1901012000027

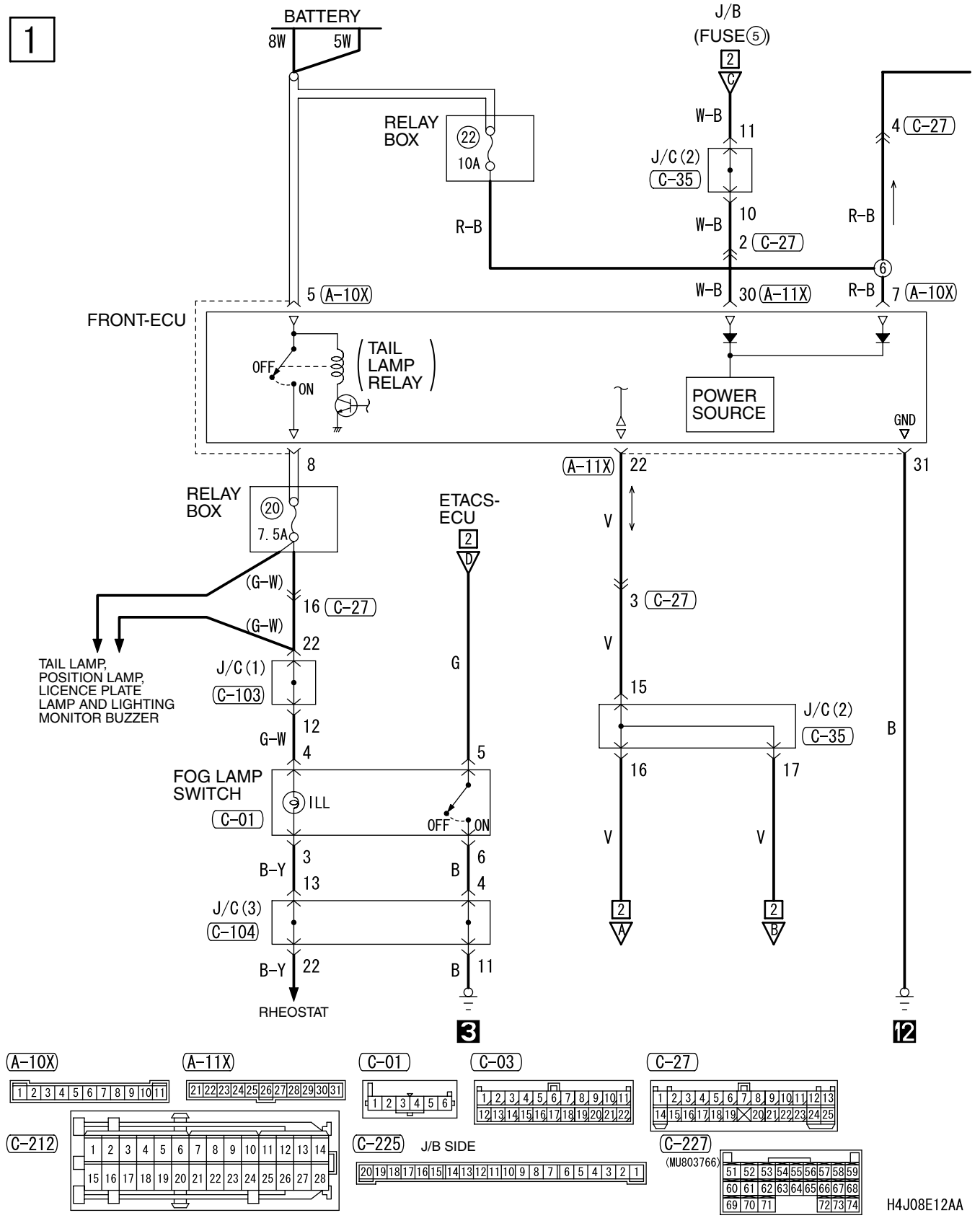

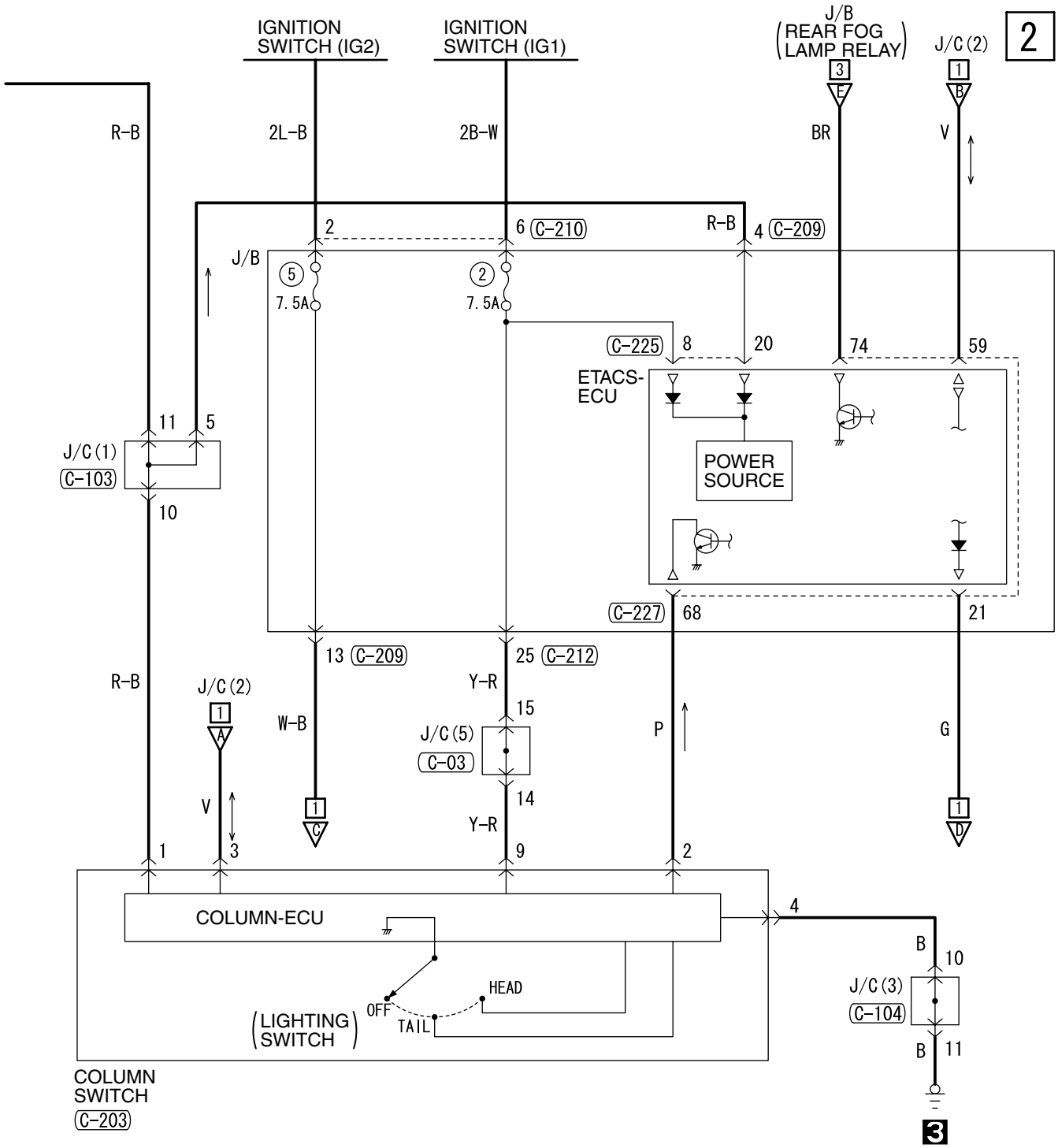

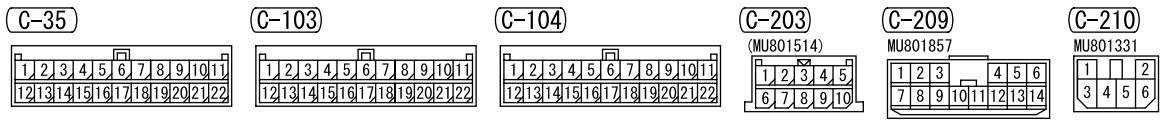

Wire colour code
B : Black LG : Light green G : Green L : Blue W : White Y : Yellow SB : Sky blue
BR : Brown O : Orange GR : Gray R : Red P : Pink V : Violet

H4J08E12AB

REAR FOG LAMP <LHD> (CONTINUED)

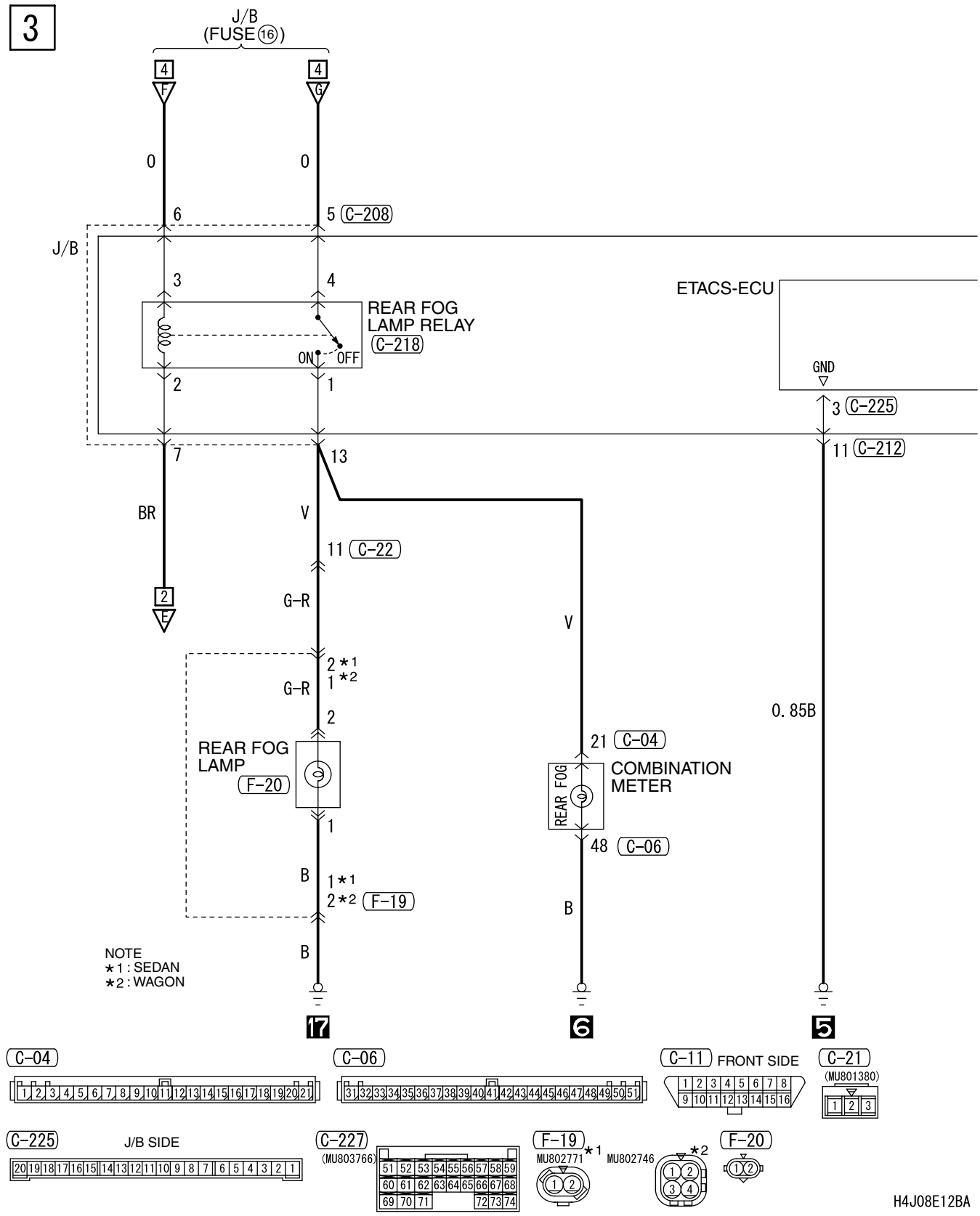

H4J08E12BA

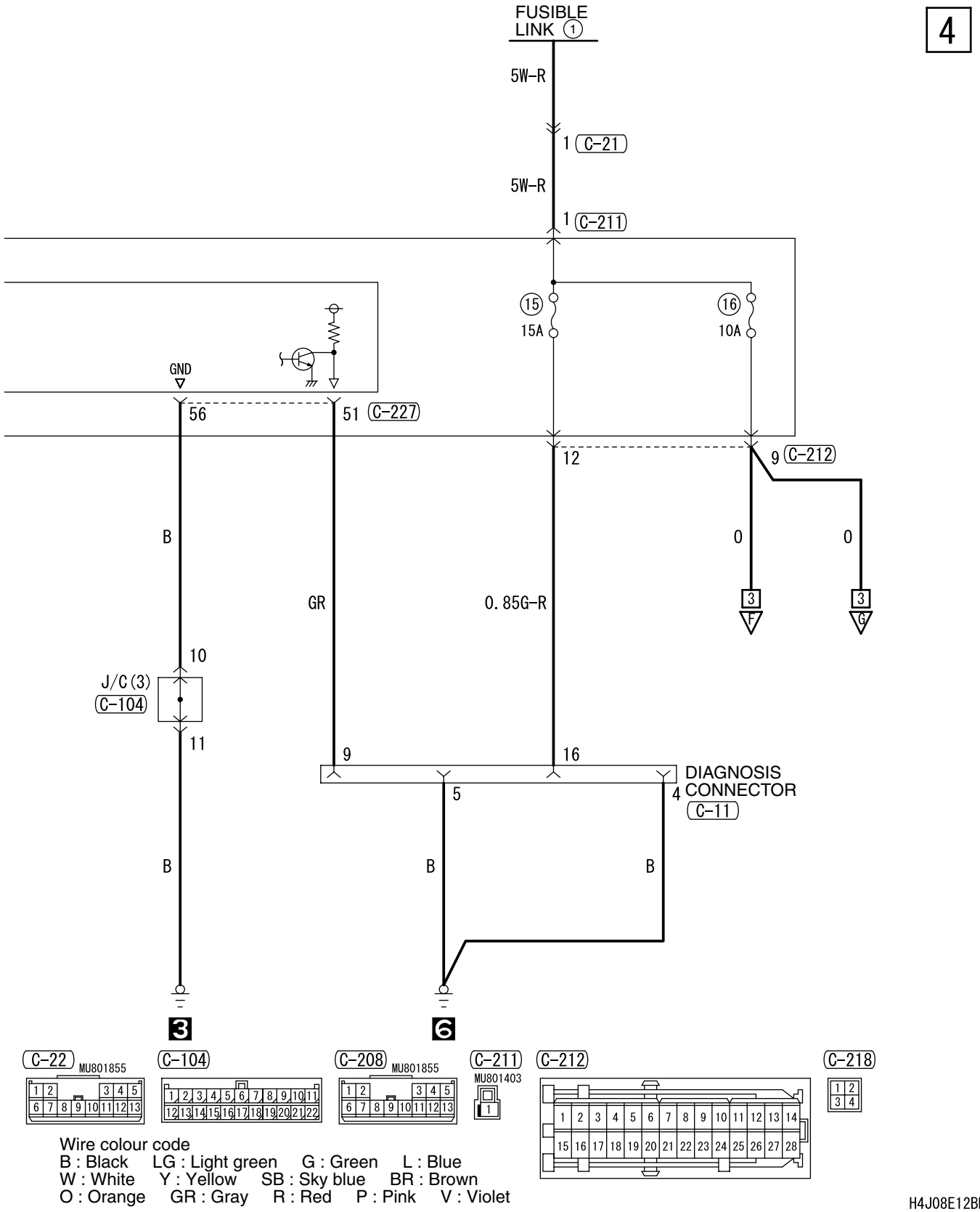
4
FUSIBLE LINK 1
5W-R
1 C-21
5W-R
1 C-211
15
15A
16
10A
GND
56
51 C-227
12
9 C-212
B
GR
0.85G-R
0
0
3 F
3 G
10
J/C (3)
C-104
11
9
16
DIAGNOSIS CONNECTOR
C-11
5
4
B
B
B
3
6
C-22
MU801855
C-104
C-208
MU801855
C-211
MU801403
C-212
C-218
Wire colour code
B : Black LG : Light green G : Green L : Blue
W : White Y : Yellow SB : Sky blue BR : Brown
O : Orange GR : Gray R : Red P : Pink V : Violet
H4J08E12BB

REAR FOG LAMP <RHD>

M1901012000038

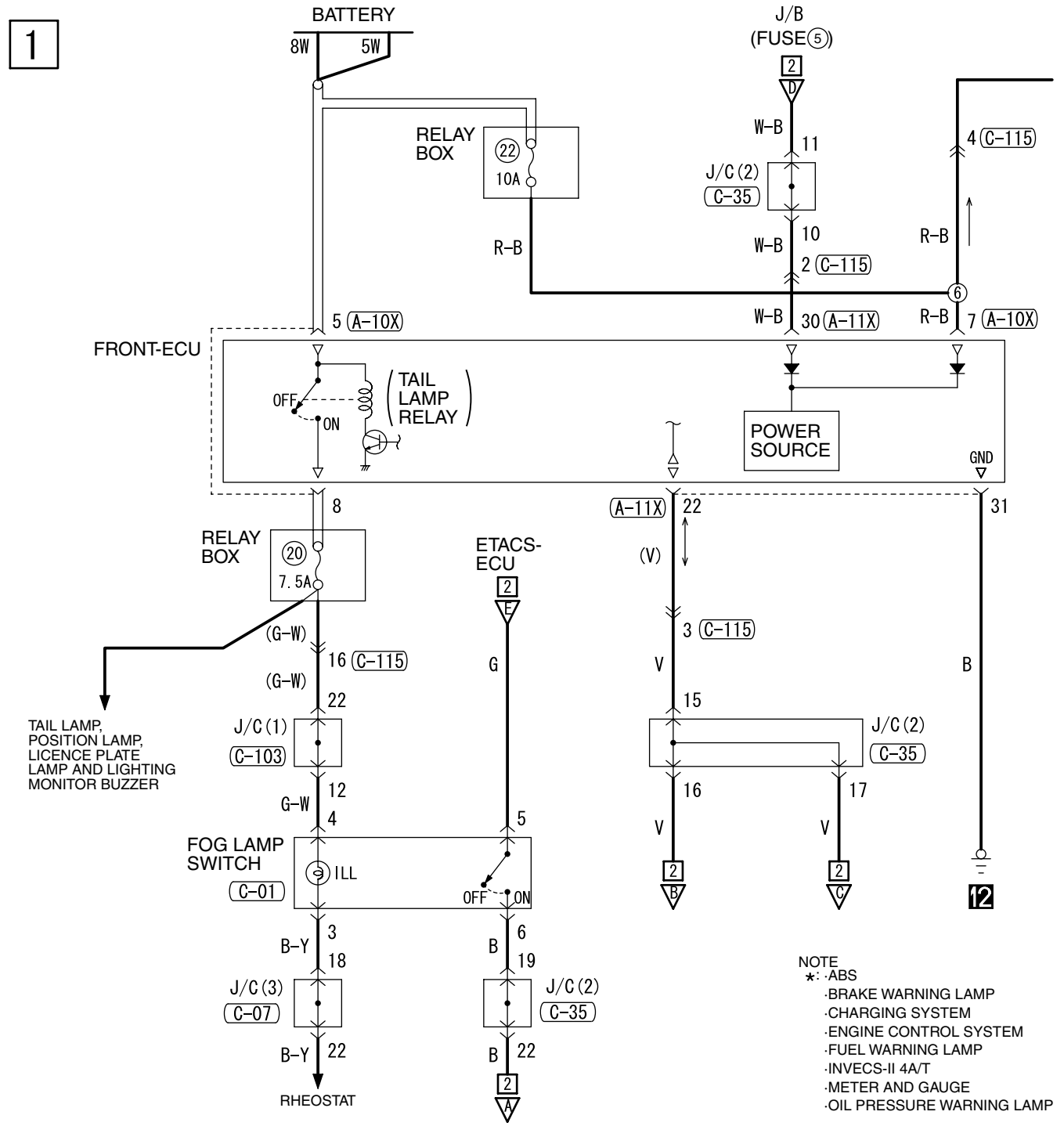

NOTE
*: ·ABS
·BRAKE WARNING LAMP
·CHARGING SYSTEM
·ENGINE CONTROL SYSTEM
·FUEL WARNING LAMP
·INVECS-II 4A/T
·METER AND GAUGE
·OIL PRESSURE WARNING LAMP

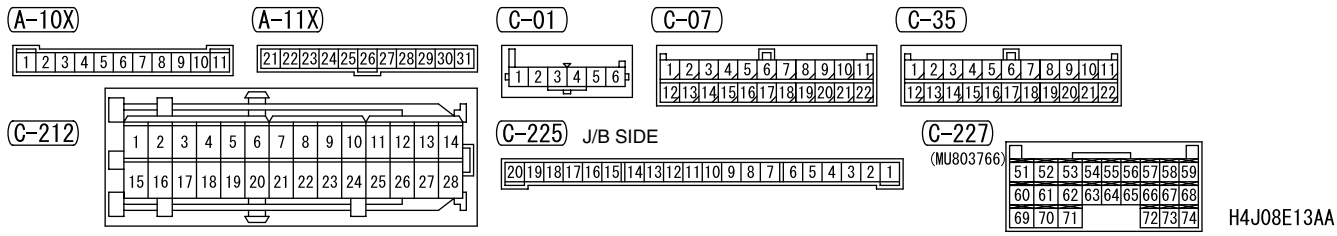

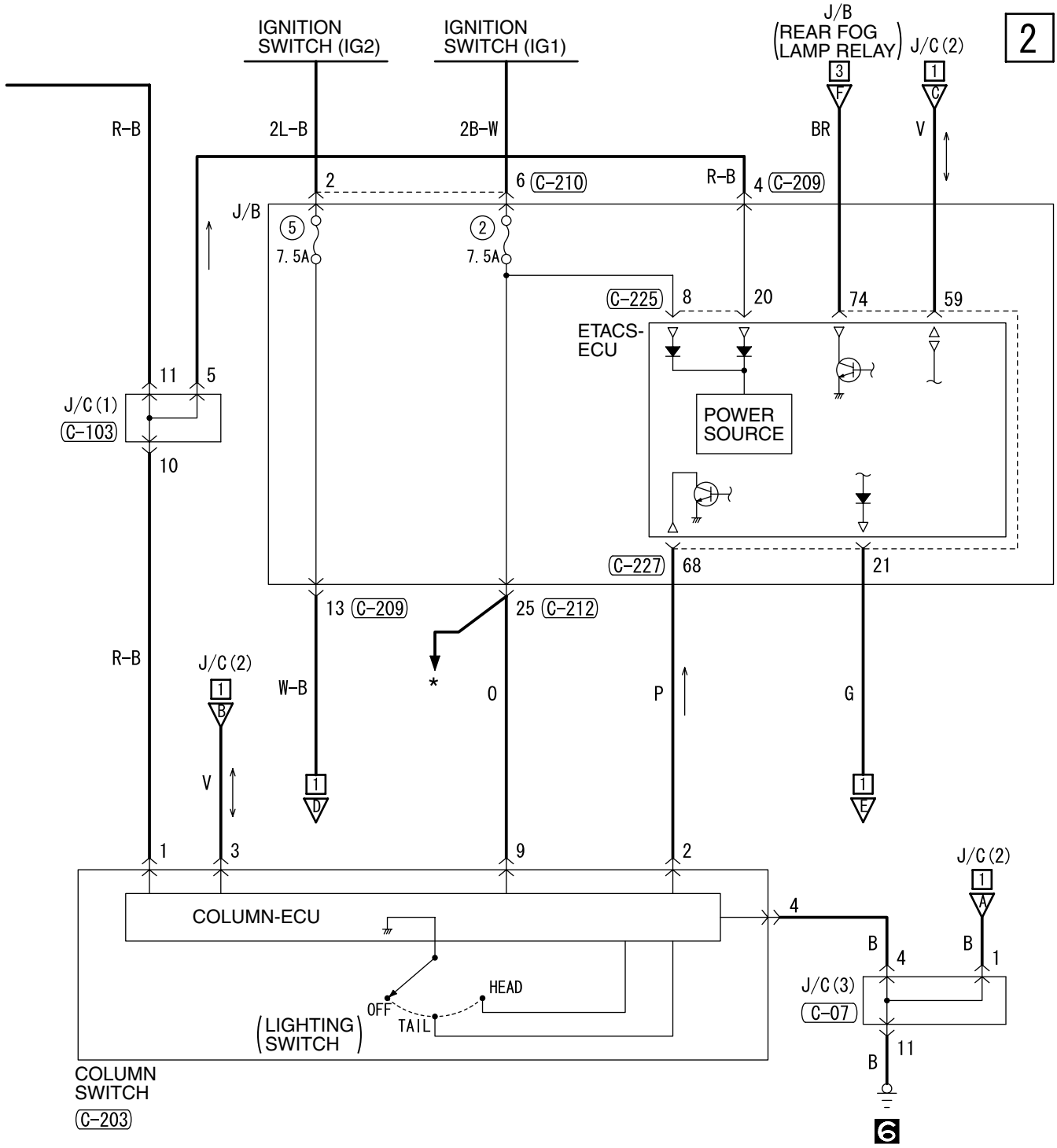

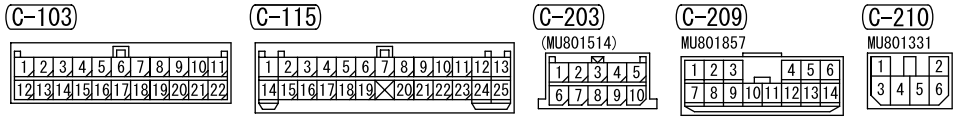

Wire colour code
B : Black LG : Light green G : Green L : Blue W : White Y : Yellow SB : Sky blue
BR : Brown O : Orange GR : Gray R : Red P : Pink V : Violet

H4J08E13AB

REAR FOG LAMP <RHD> (CONTINUED)

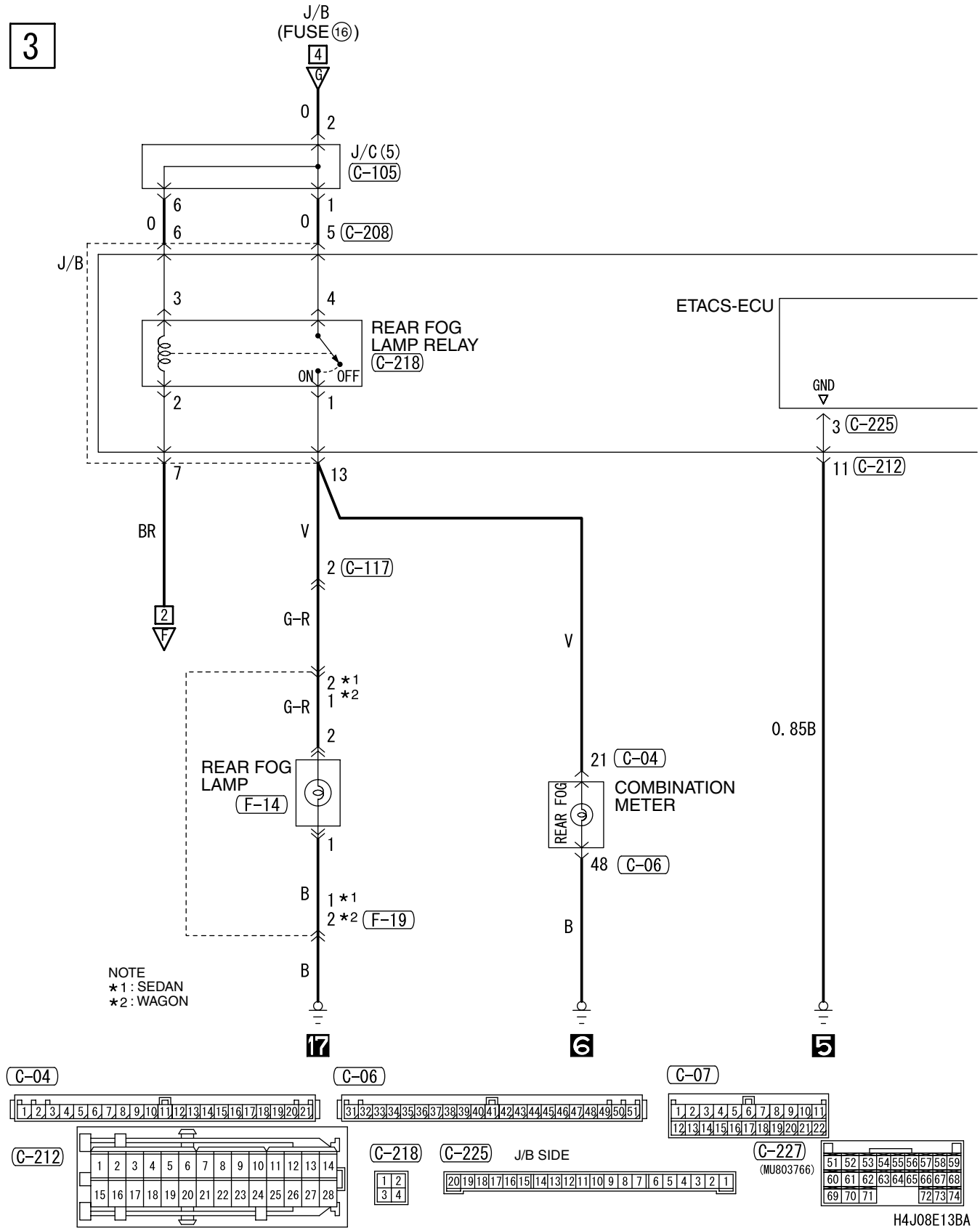

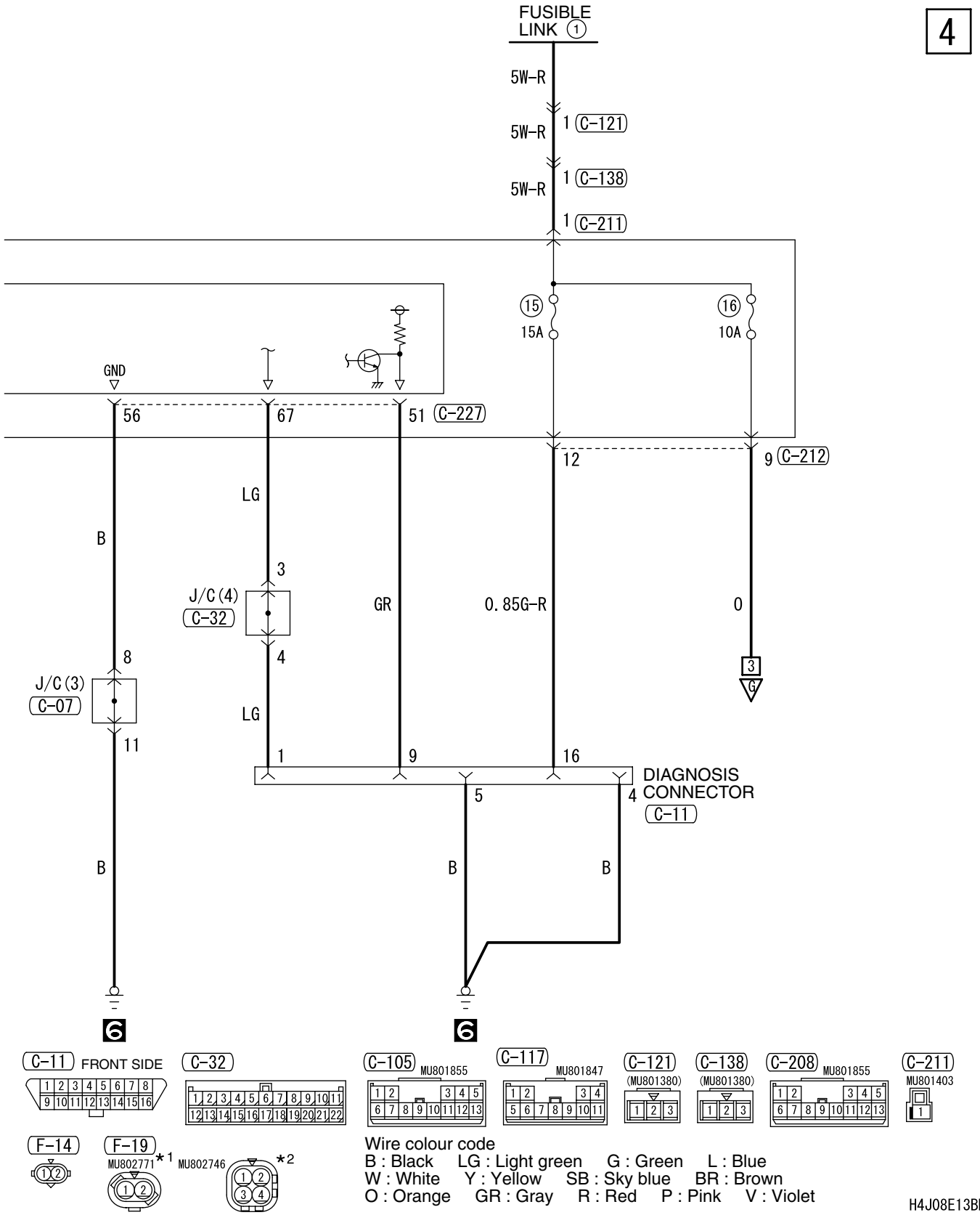

Wire colour code
B : Black LG : Light green G : Green L : Blue
W : White Y : Yellow SB : Sky blue BR : Brown
O : Orange GR : Gray R : Red P : Pink V : Violet

H4J08E13BB

HEADLAMP LEVELING SYSTEM <LHD>

M1901012500055

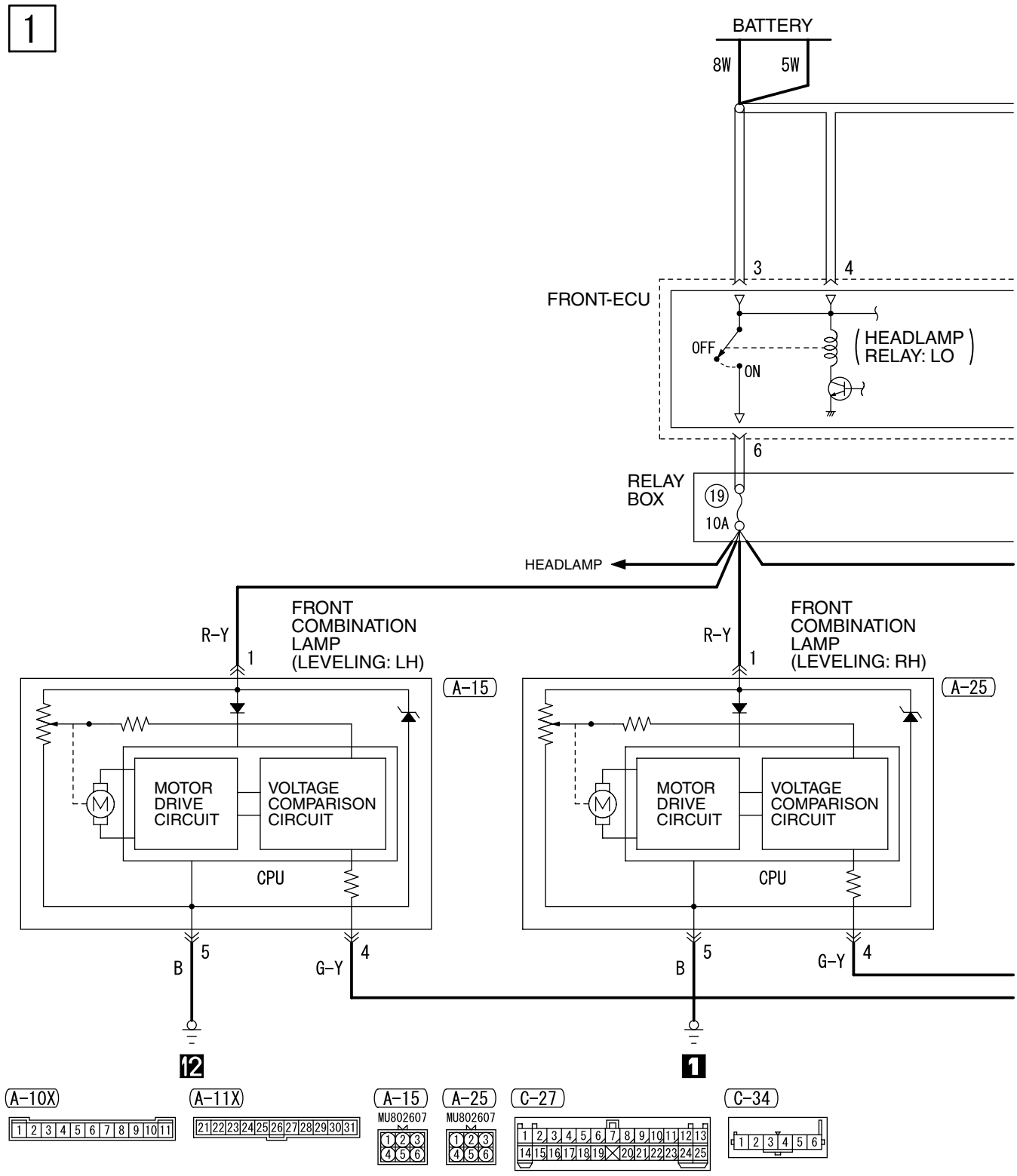

H4J08E10AA

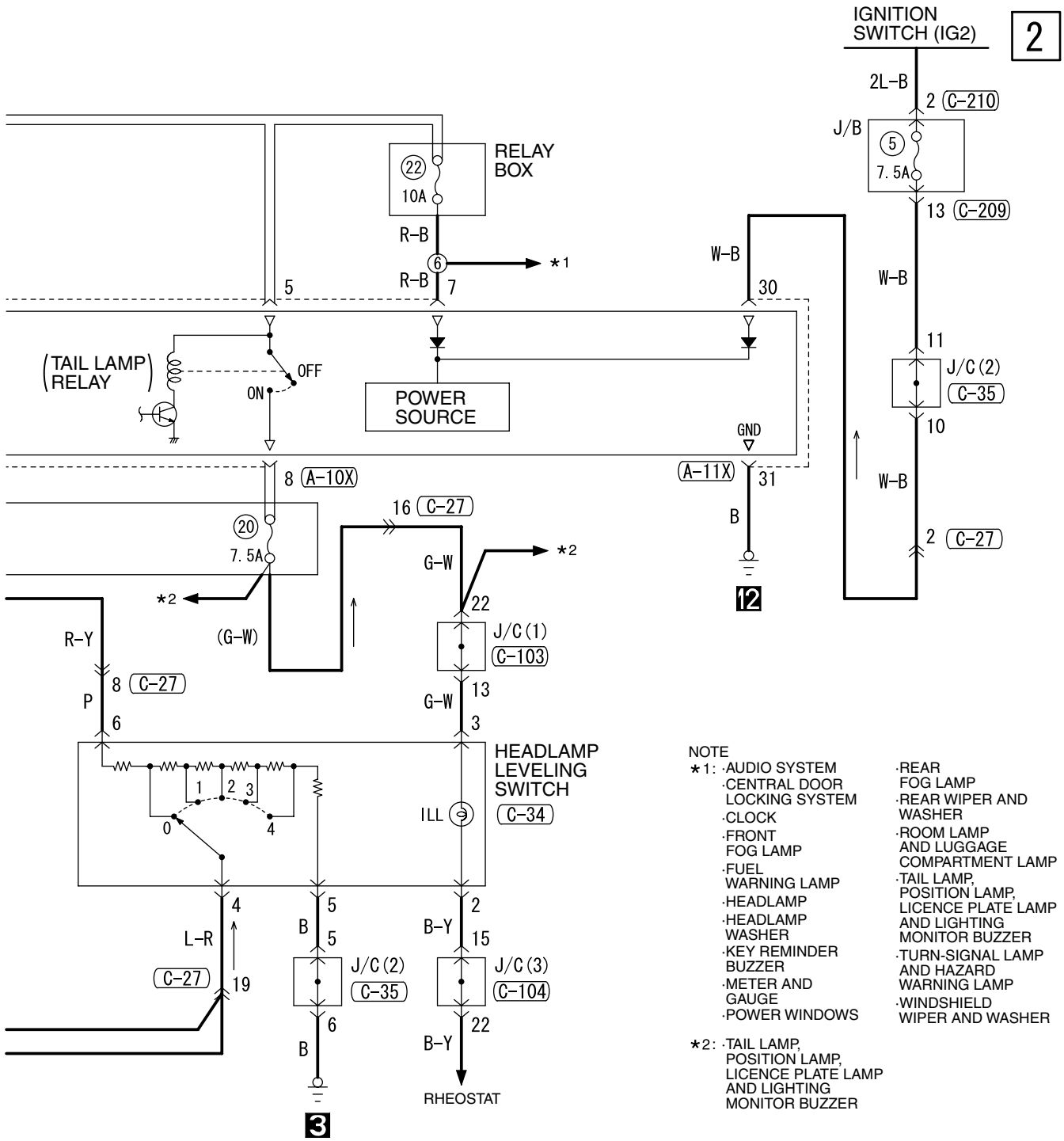

NOTE

*1: ·AUDIO SYSTEM
·CENTRAL DOOR LOCKING SYSTEM
·CLOCK
·FRONT FOG LAMP
·FUEL WARNING LAMP
·HEADLAMP
·HEADLAMP WASHER
·KEY REMINDER BUZZER
·METER AND GAUGE
·POWER WINDOWS
·REAR FOG LAMP
·REAR WIPER AND WASHER
·ROOM LAMP AND LUGGAGE COMPARTMENT LAMP
·TAIL LAMP, POSITION LAMP, LICENCE PLATE LAMP AND LIGHTING MONITOR BUZZER
·TURN-SIGNAL LAMP AND HAZARD WARNING LAMP
·WINDSHIELD WIPER AND WASHER

*2: ·TAIL LAMP, POSITION LAMP, LICENCE PLATE LAMP AND LIGHTING MONITOR BUZZER

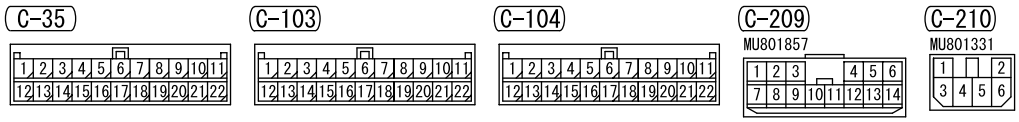

Wire colour code
B : Black LG : Light green G : Green L : Blue W : White Y : Yellow SB : Sky blue
BR : Brown O : Orange GR : Gray R : Red P : Pink V : Violet

H4J08E10AB

HEADLAMP LEVELING SYSTEM <RHD>

M1901012500066

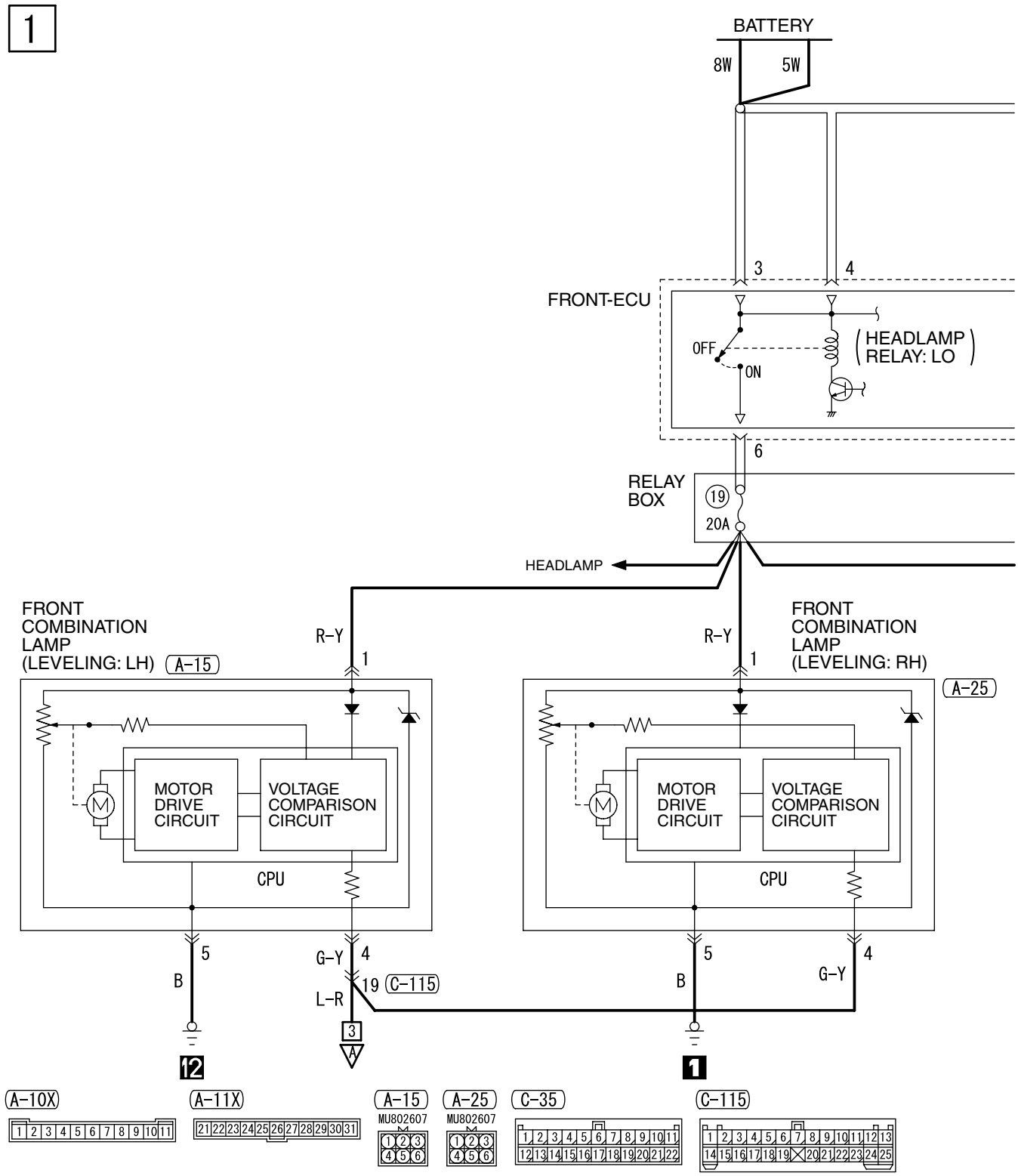

H4J08E11AA

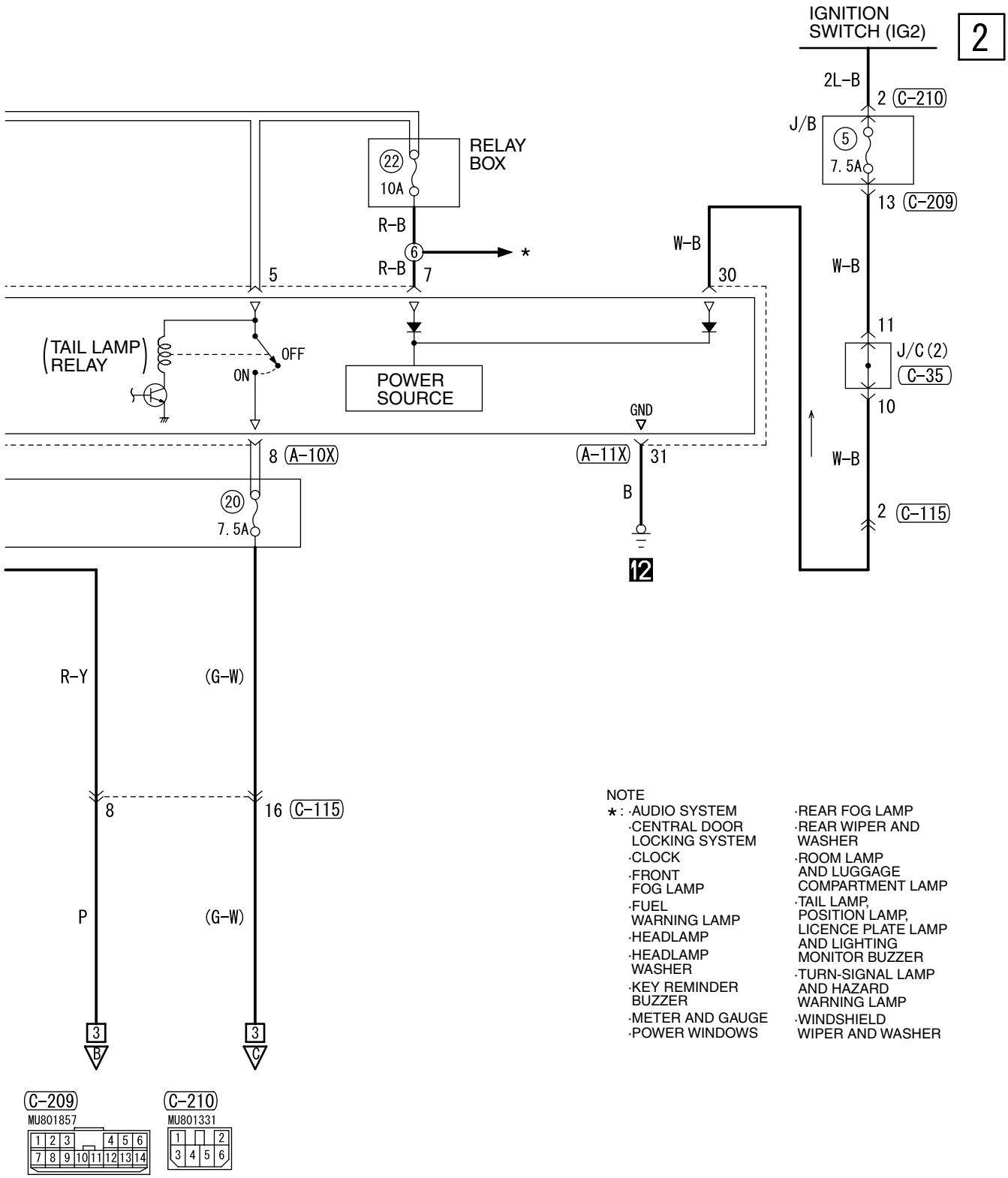

NOTE

*:
- AUDIO SYSTEM
- CENTRAL DOOR LOCKING SYSTEM
- CLOCK
- FRONT FOG LAMP
- FUEL WARNING LAMP
- HEADLAMP
- HEADLAMP WASHER
- KEY REMINDER BUZZER
- METER AND GAUGE
- POWER WINDOWS
- REAR FOG LAMP
- REAR WIPER AND WASHER
- ROOM LAMP AND LUGGAGE COMPARTMENT LAMP
- TAIL LAMP, POSITION LAMP, LICENCE PLATE LAMP AND LIGHTING MONITOR BUZZER
- TURN-SIGNAL LAMP AND HAZARD WARNING LAMP
- WINDSHIELD WIPER AND WASHER

Wire colour code
B : Black LG : Light green G : Green L : Blue W : White Y : Yellow SB : Sky blue
BR : Brown O : Orange GR : Gray R : Red P : Pink V : Violet

H4J08E11AB

HEADLAMP LEVELING SYSTEM <RHD> (CONTINUED)

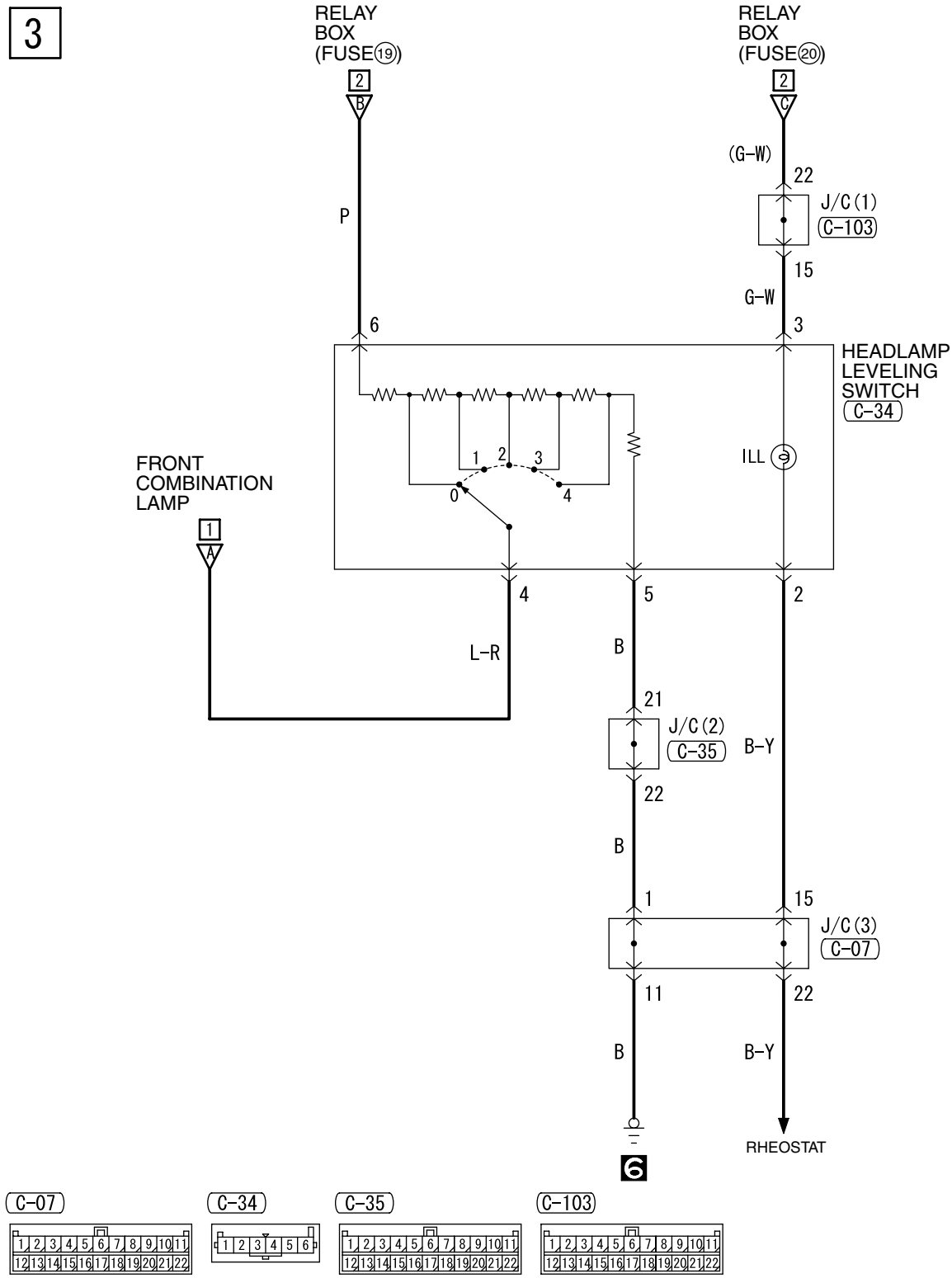

Wire colour code
B : Black LG : Light green G : Green L : Blue W : White Y : Yellow SB : Sky blue
BR : Brown O : Orange GR : Gray R : Red P : Pink V : Violet

H4J08E11BA

NOTES

TURN SIGNAL LAMP AND HAZARD LAMP <LHD>

M1901002900751

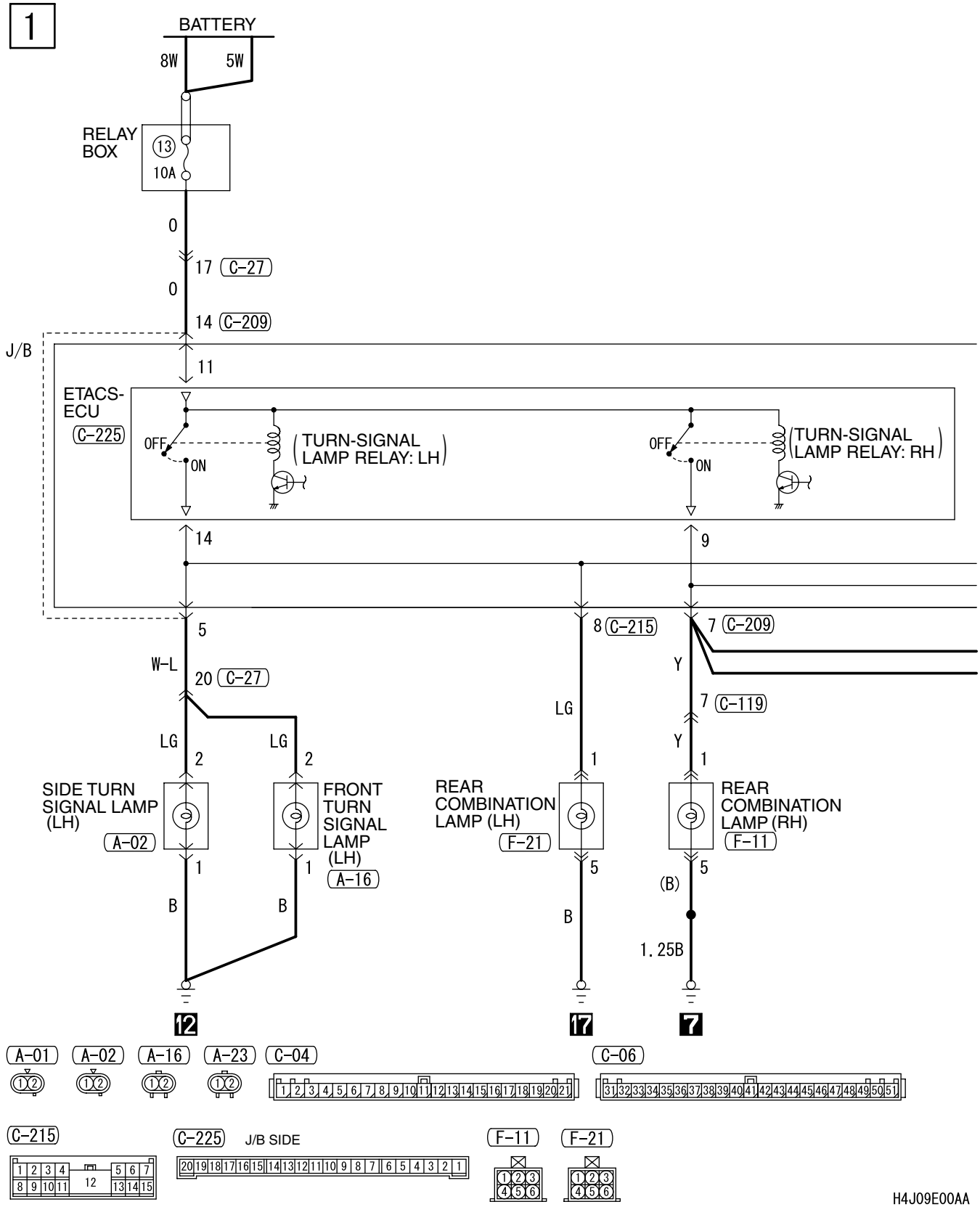

2

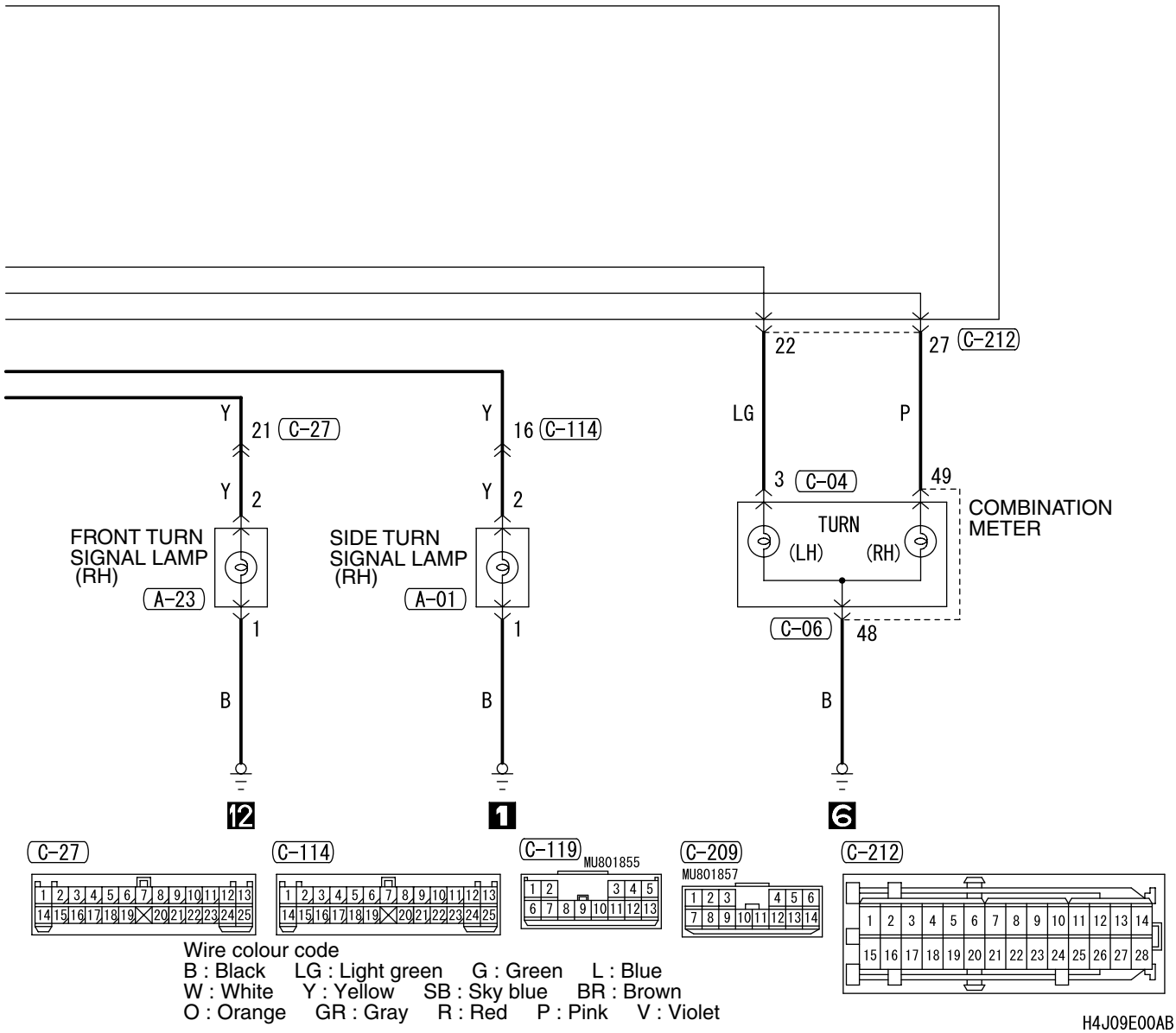
22
27 C-212
LG
P
Y
21 C-27
Y
16 C-114
Y
2
Y
2
3 C-04
49
COMBINATION METER
TURN
(LH)
(RH)
FRONT TURN SIGNAL LAMP (RH)
A-23
SIDE TURN SIGNAL LAMP (RH)
A-01
1
1
C-06
48
B
B
B
12
1
6
C-27
C-114
C-119
MU801855
C-209
MU801857
C-212
Wire colour code
B : Black LG : Light green G : Green L : Blue
W : White Y : Yellow SB : Sky blue BR : Brown
O : Orange GR : Gray R : Red P : Pink V : Violet
H4J09E00AB

TURN SIGNAL LAMP AND HAZARD LAMP <LHD> (CONTINUED)

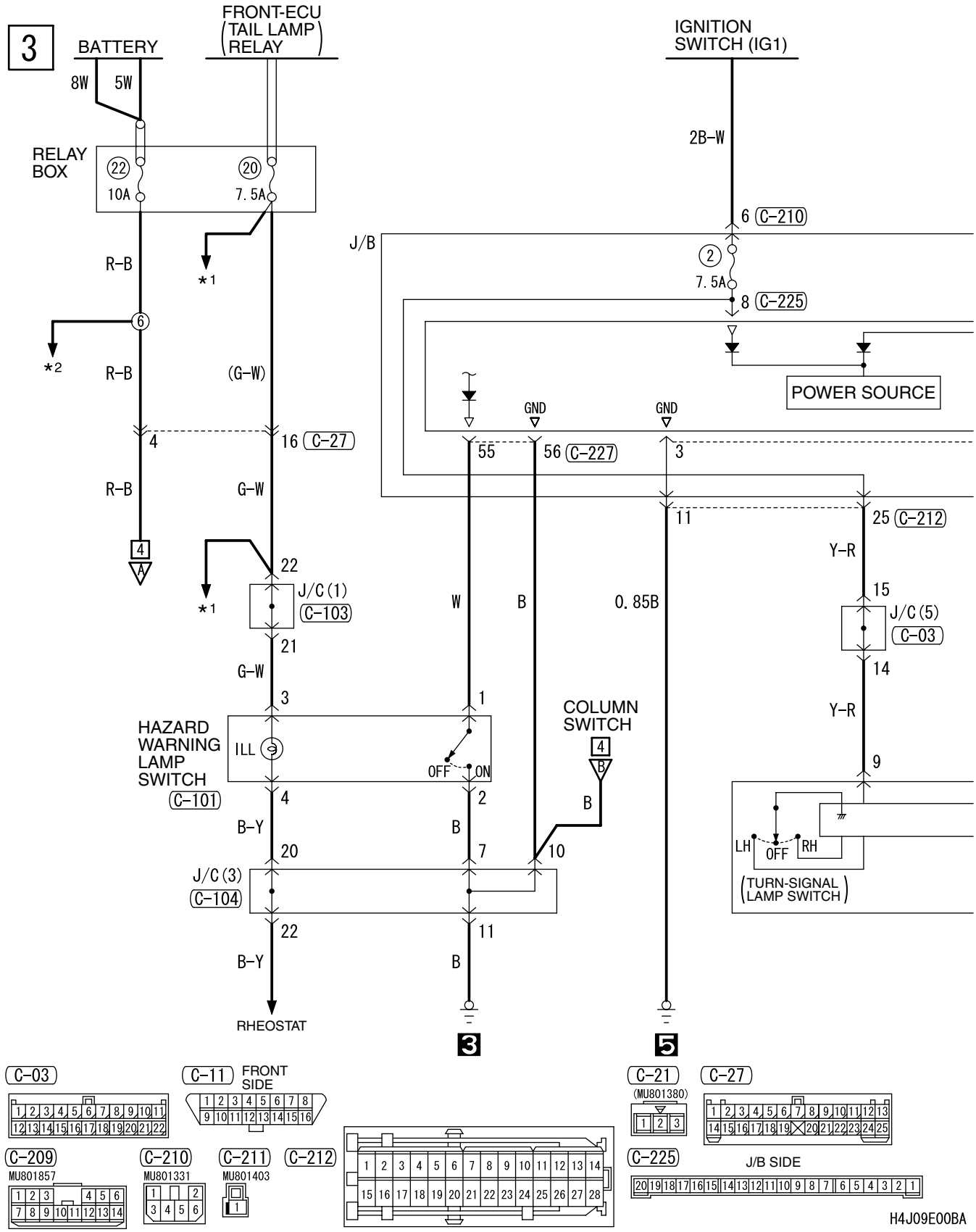

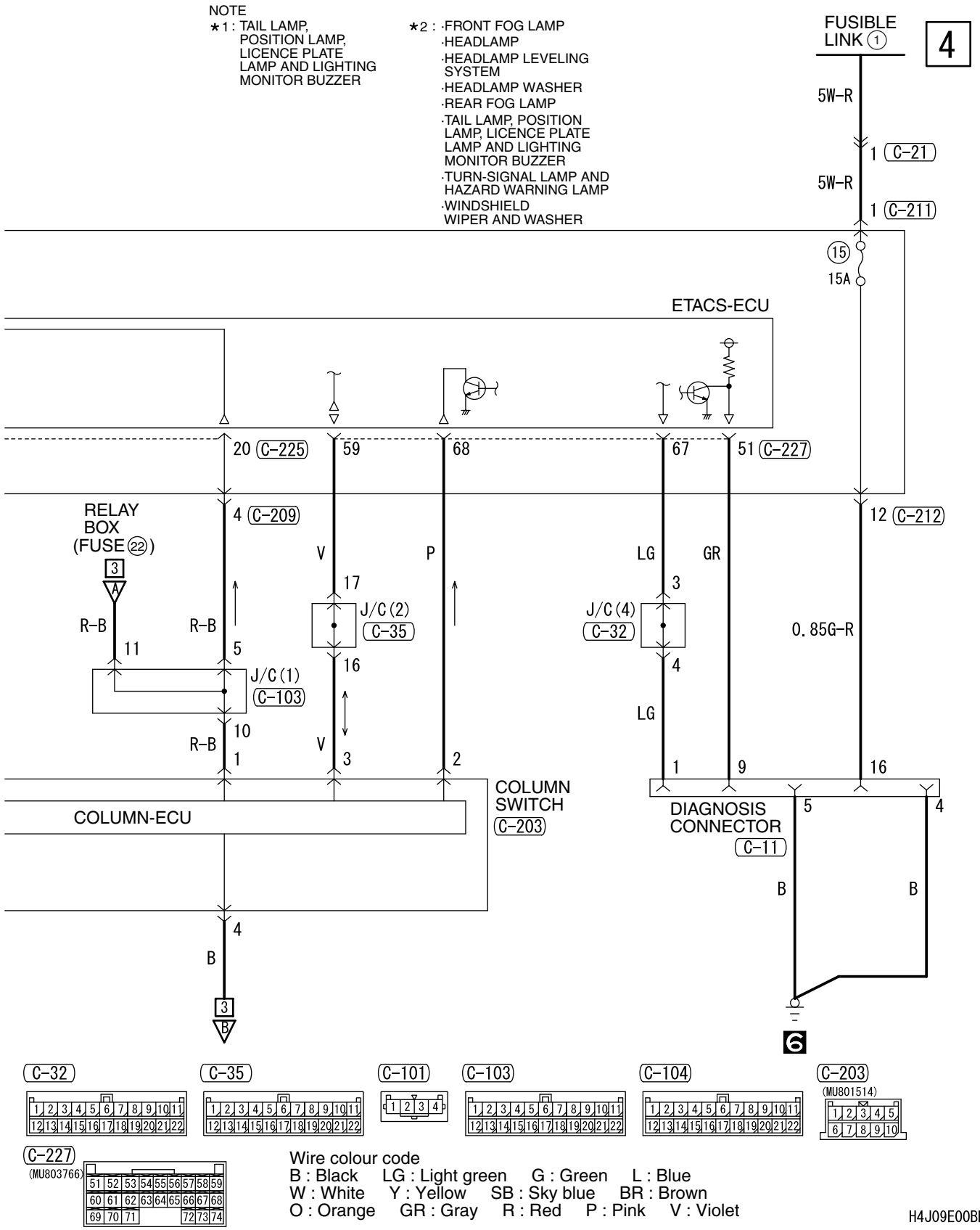

Wire colour code
B : Black LG : Light green G : Green L : Blue
W : White Y : Yellow SB : Sky blue BR : Brown
O : Orange GR : Gray R : Red P : Pink V : Violet

H4J09E00BB

TURN SIGNAL LAMP AND HAZARD LAMP <RHD>

M1901002900762

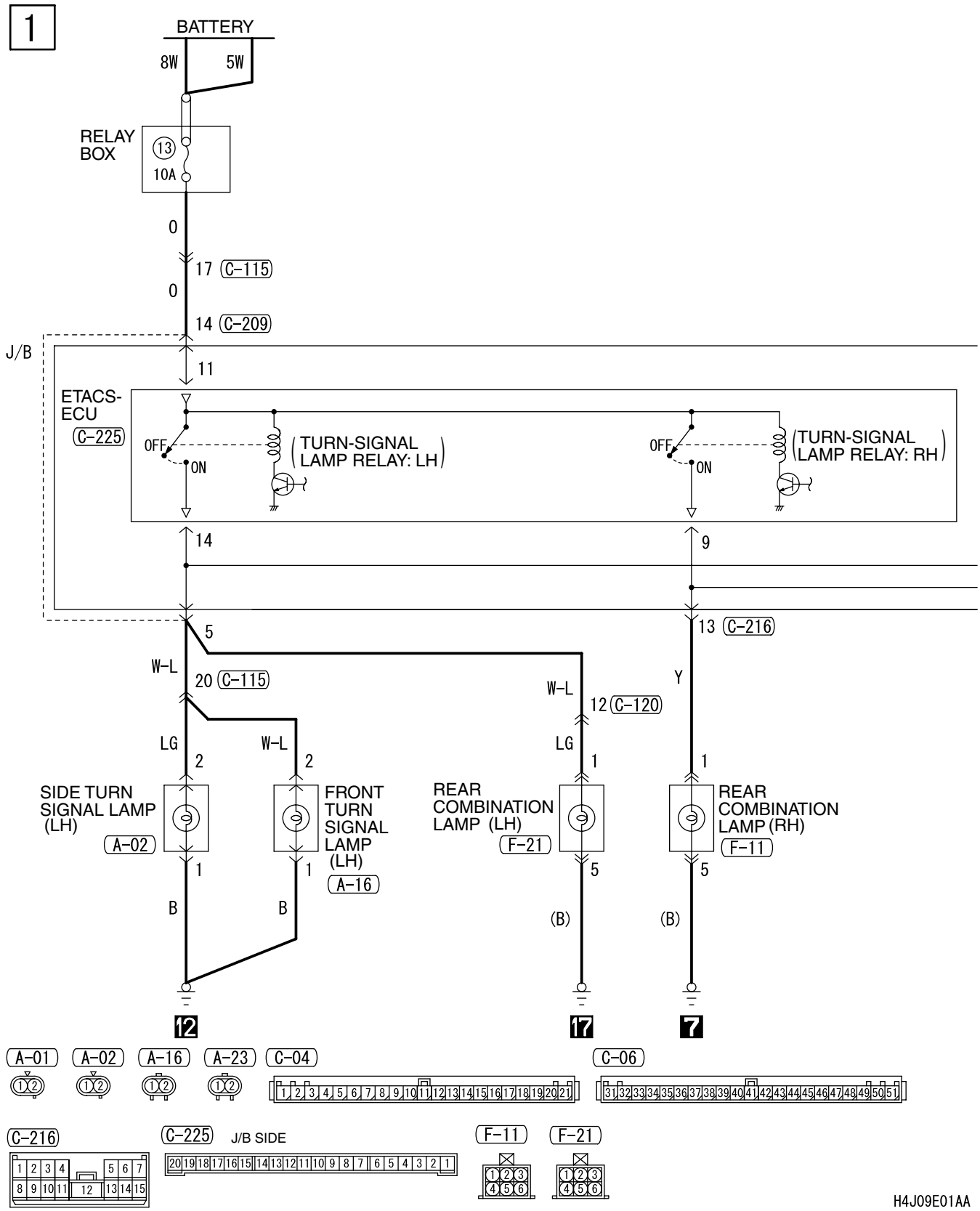

2

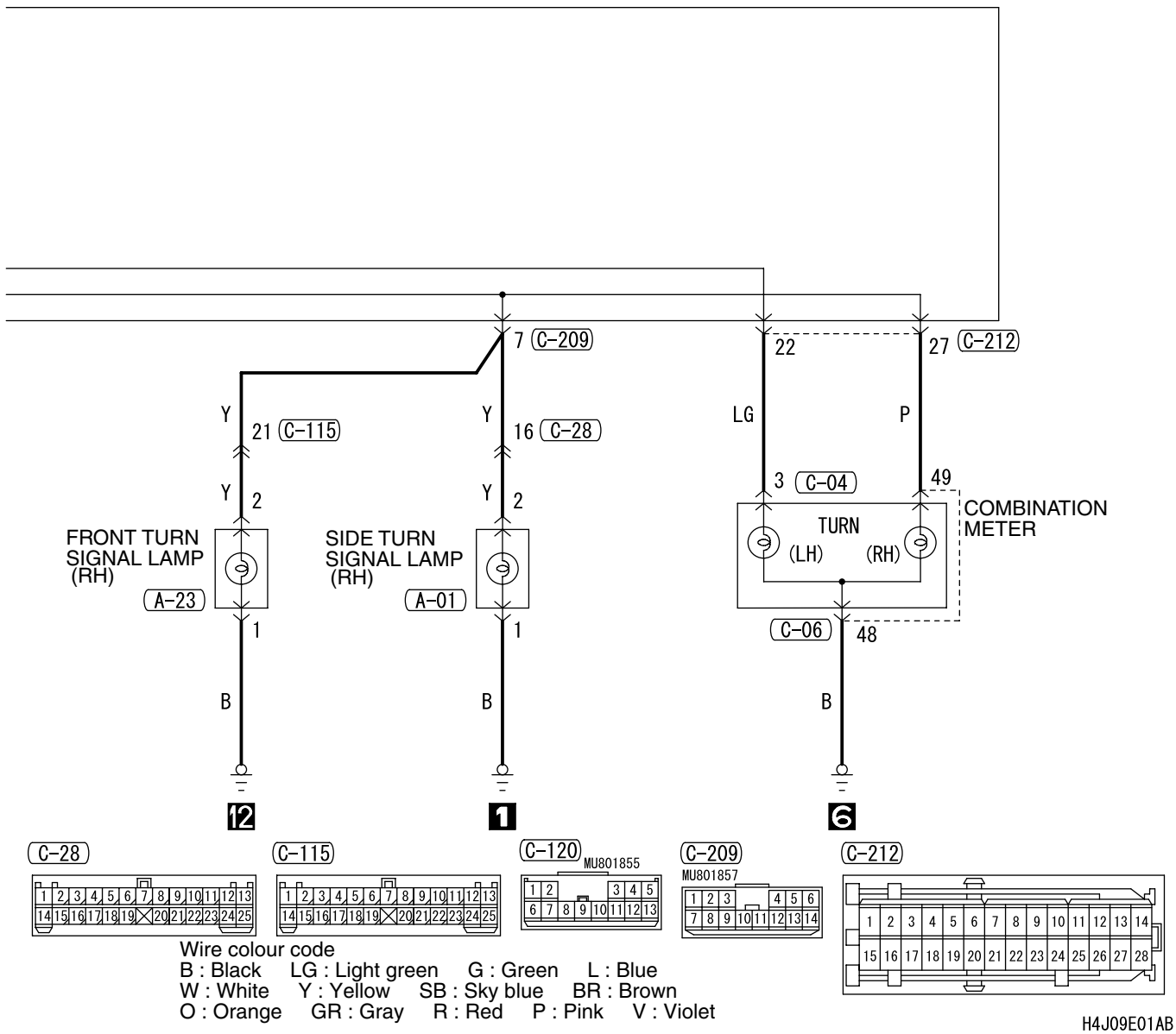
7 C-209
22
27 C-212
Y
21 C-115
Y
16 C-28
LG
P
Y
2
Y
2
3 C-04
49
FRONT TURN
SIGNAL LAMP
(RH)
A-23
SIDE TURN
SIGNAL LAMP
(RH)
A-01
TURN
(LH)
(RH)
COMBINATION
METER
1
1
C-06
48
B
B
B
12
1
6
C-28
C-115
C-120
MU801855
C-209
MU801857
C-212
Wire colour code
B : Black LG : Light green G : Green L : Blue
W : White Y : Yellow SB : Sky blue BR : Brown
O : Orange GR : Gray R : Red P : Pink V : Violet
H4J09E01AB

TURN SIGNAL LAMP AND HAZARD LAMP <RHD> (CONTINUED)

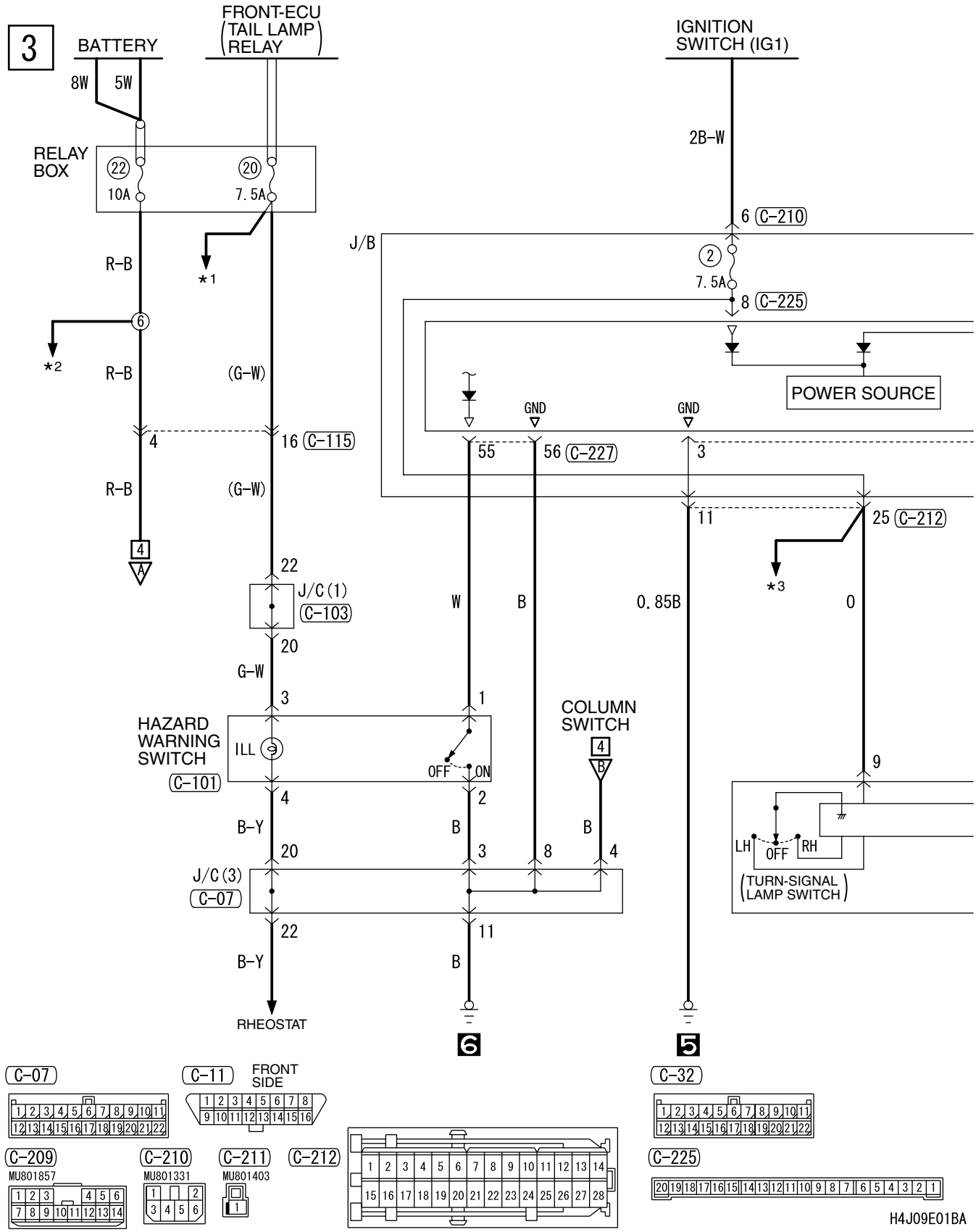

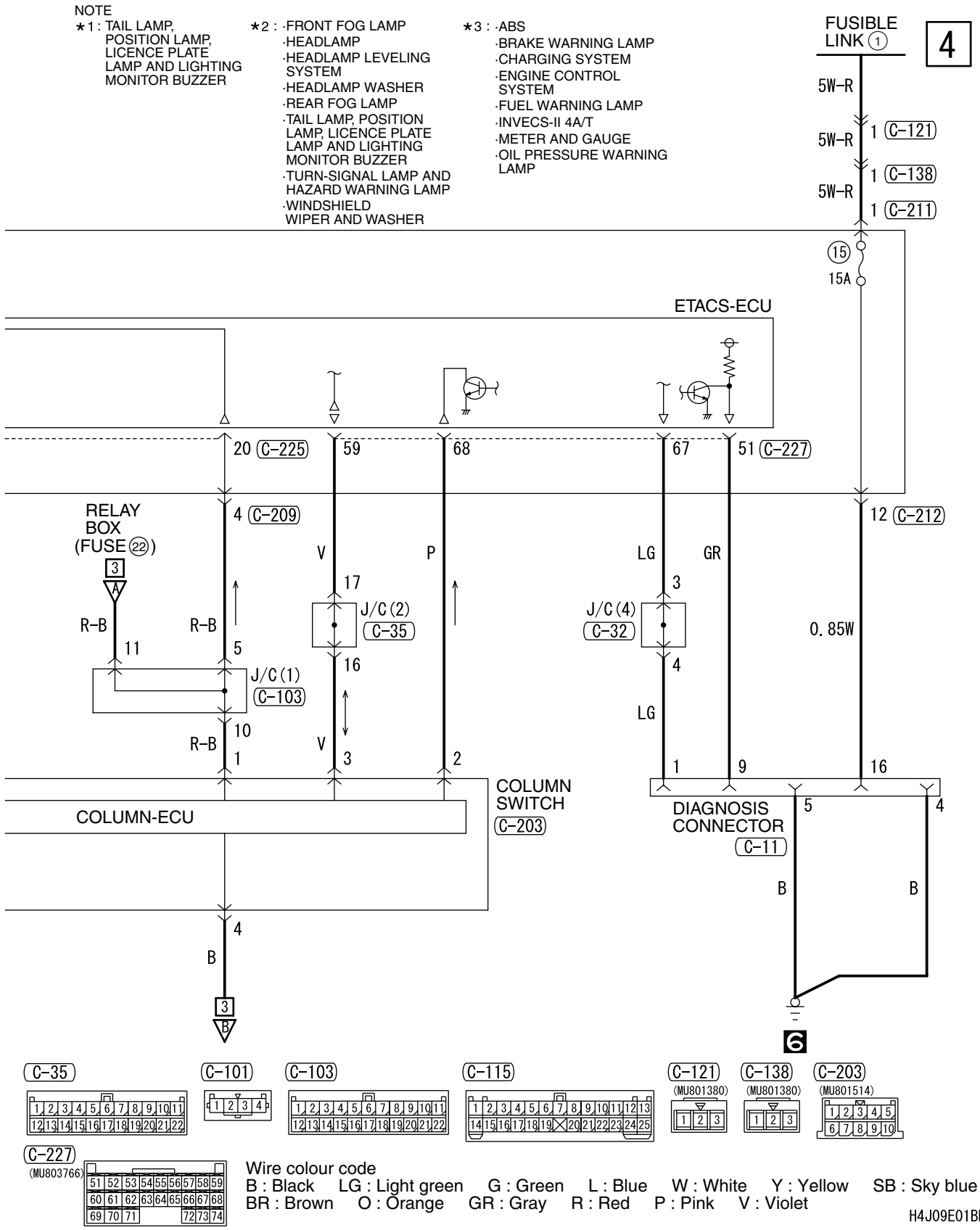
NOTE
*1: TAIL LAMP, POSITION LAMP, LICENCE PLATE LAMP AND LIGHTING MONITOR BUZZER
*2: ·FRONT FOG LAMP ·HEADLAMP ·HEADLAMP LEVELING SYSTEM ·HEADLAMP WASHER ·REAR FOG LAMP ·TAIL LAMP, POSITION LAMP, LICENCE PLATE LAMP AND LIGHTING MONITOR BUZZER ·TURN-SIGNAL LAMP AND HAZARD WARNING LAMP ·WINDSHIELD WIPER AND WASHER
*3: ·ABS ·BRAKE WARNING LAMP ·CHARGING SYSTEM ·ENGINE CONTROL SYSTEM ·FUEL WARNING LAMP ·INVECS-II 4A/T ·METER AND GAUGE ·OIL PRESSURE WARNING LAMP
FUSIBLE LINK 1
4
5W-R
5W-R
1 C-121
1 C-138
5W-R
1 C-211
15
15A
ETACS-ECU
20 C-225
59
68
67
51 C-227
RELAY BOX (FUSE 22)
4 C-209
12 C-212
V
P
LG
GR
17
3
J/C (2)
C-35
J/C (4)
C-32
R-B
R-B
11
5
16
4
0.85W
J/C (1)
C-103
LG
R-B
10
V
1
3
2
1
9
16
COLUMN SWITCH
C-203
COLUMN-ECU
DIAGNOSIS CONNECTOR
C-11
5
4
B
B
4
B
6
C-35
C-101
C-103
C-115
C-121
(MU801380)
C-138
(MU801380)
C-203
(MU801514)
C-227
(MU803766)
Wire colour code
B : Black LG : Light green G : Green L : Blue W : White Y : Yellow SB : Sky blue
BR : Brown O : Orange GR : Gray R : Red P : Pink V : Violet
H4J09E01BB

BACKUP LAMP <LHD>

M1901003100758

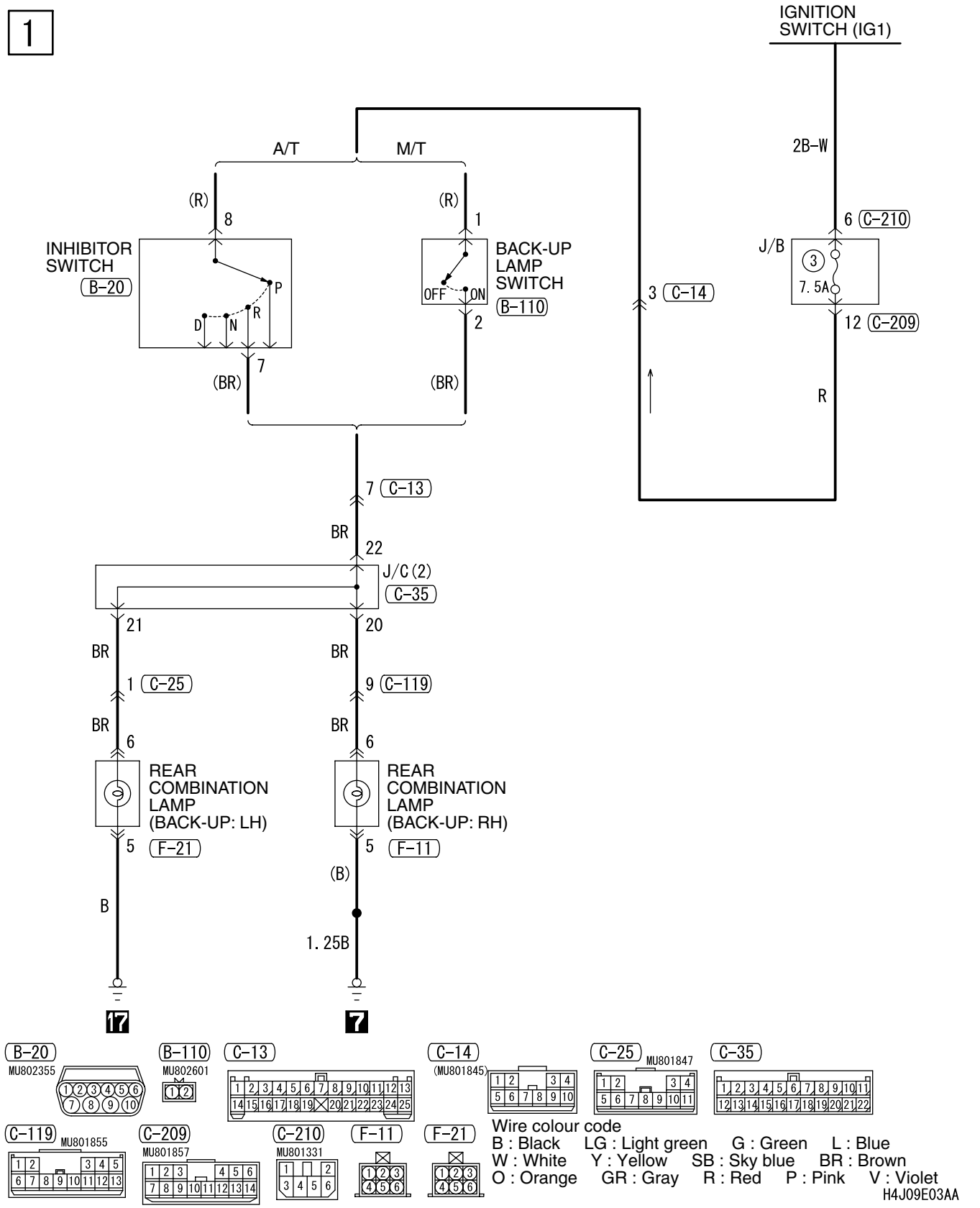

BACKUP LAMP <RHD>

M1901003100769

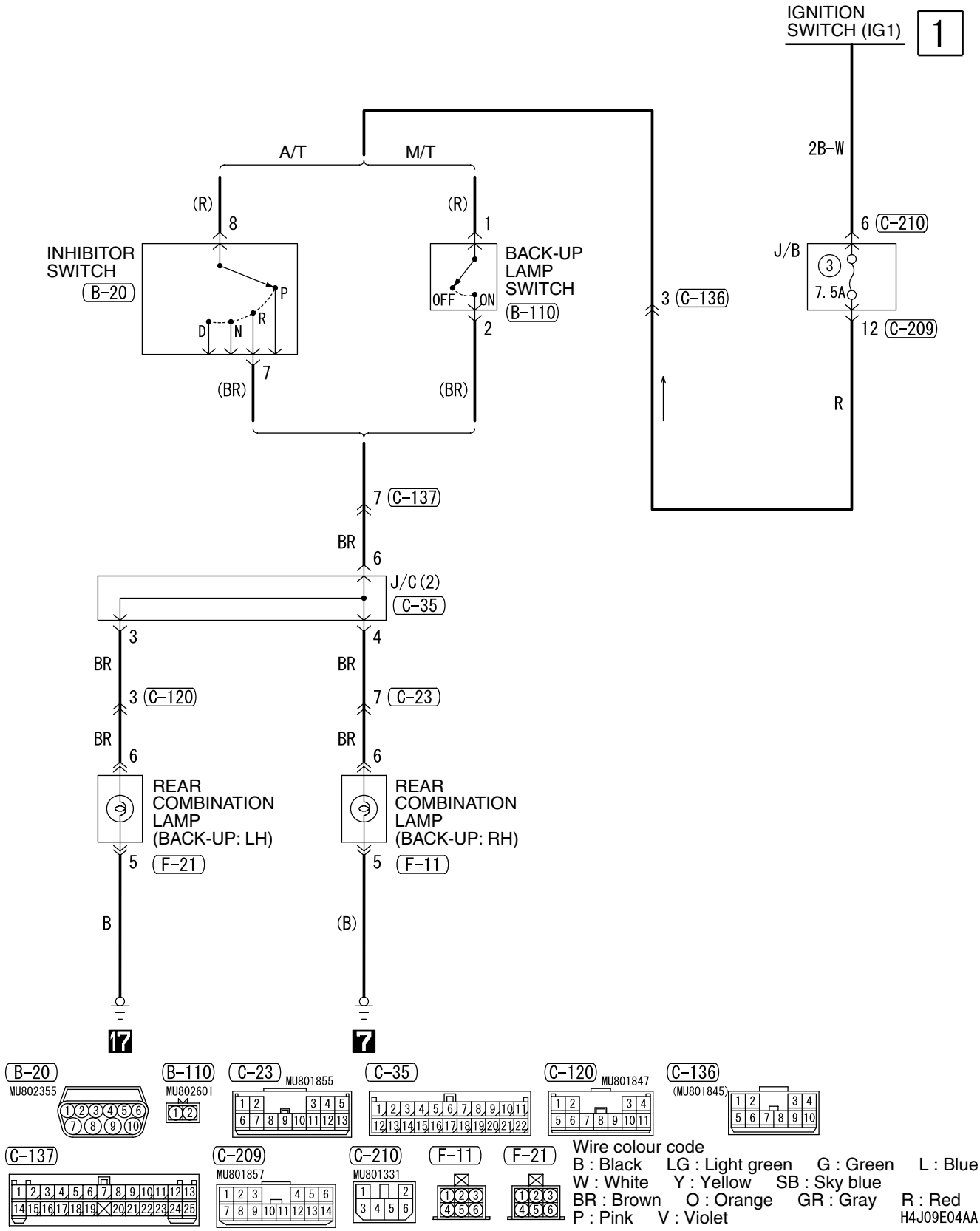

STOP LAMP <SEDAN (LHD)>

M1901003000687

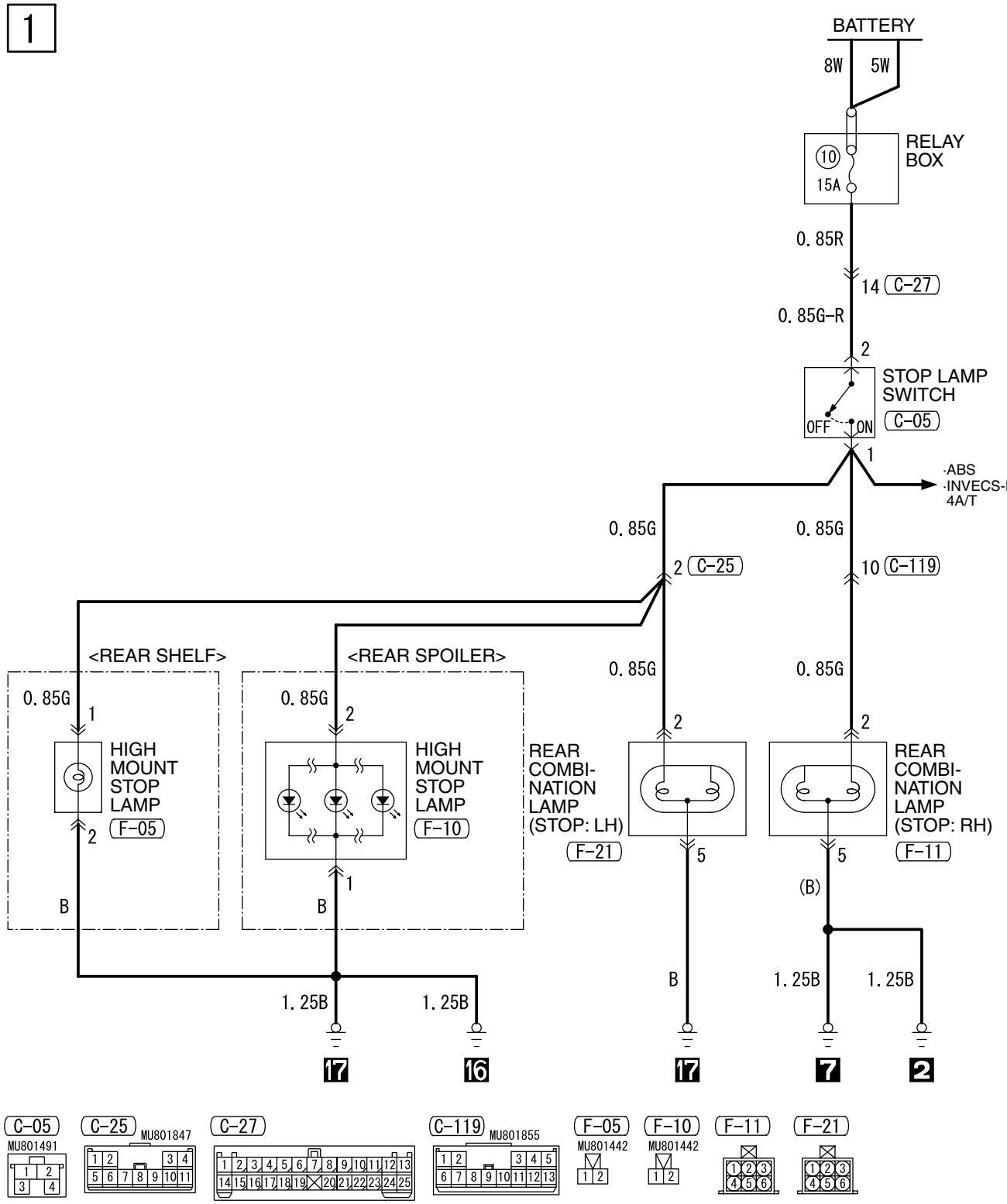

Wire colour code
B : Black LG : Light green G : Green L : Blue W : White Y : Yellow SB : Sky blue
BR : Brown O : Orange GR : Gray R : Red P : Pink V : Violet

H4J09E05AA

STOP LAMP <SEDAN (RHD)>

M1901003000698

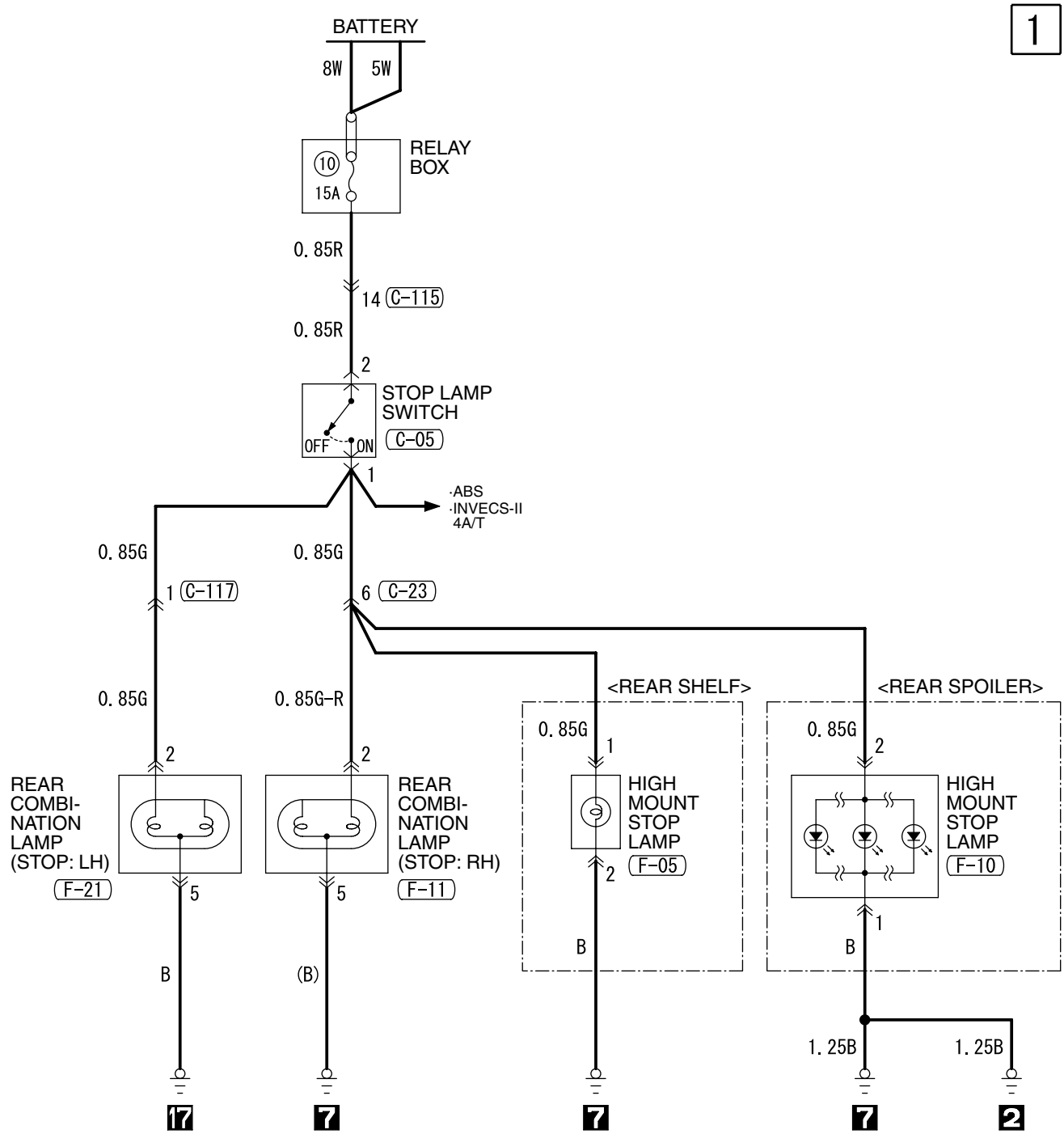

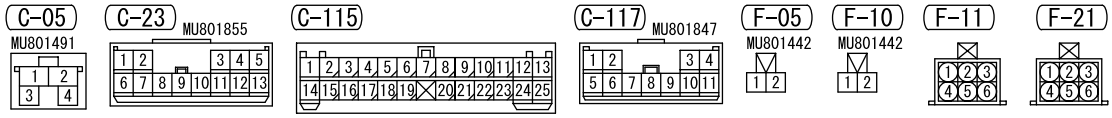

Wire colour code
B : Black LG : Light green G : Green L : Blue W : White Y : Yellow SB : Sky blue
BR : Brown O : Orange GR : Gray R : Red P : Pink V : Violet

H4J09E07AA

STOP LAMP <WAGON (LHD)>

M1901003000706

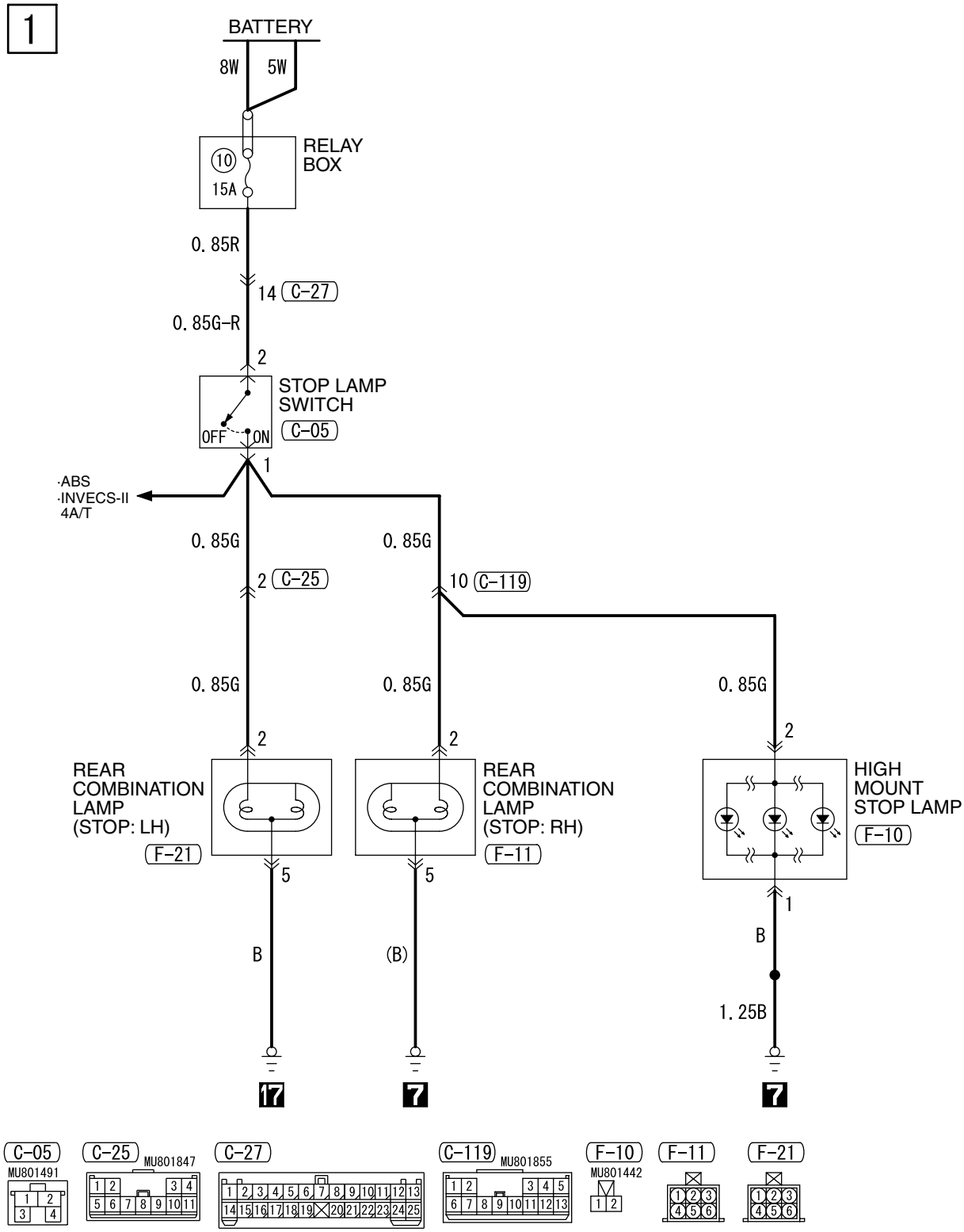

Wire colour code
B : Black LG : Light green G : Green L : Blue W : White Y : Yellow SB : Sky blue
BR : Brown O : Orange GR : Gray R : Red P : Pink V : Violet

H4J09E06AA

STOP LAMP <WAGON (RHD)>

M1901003000717

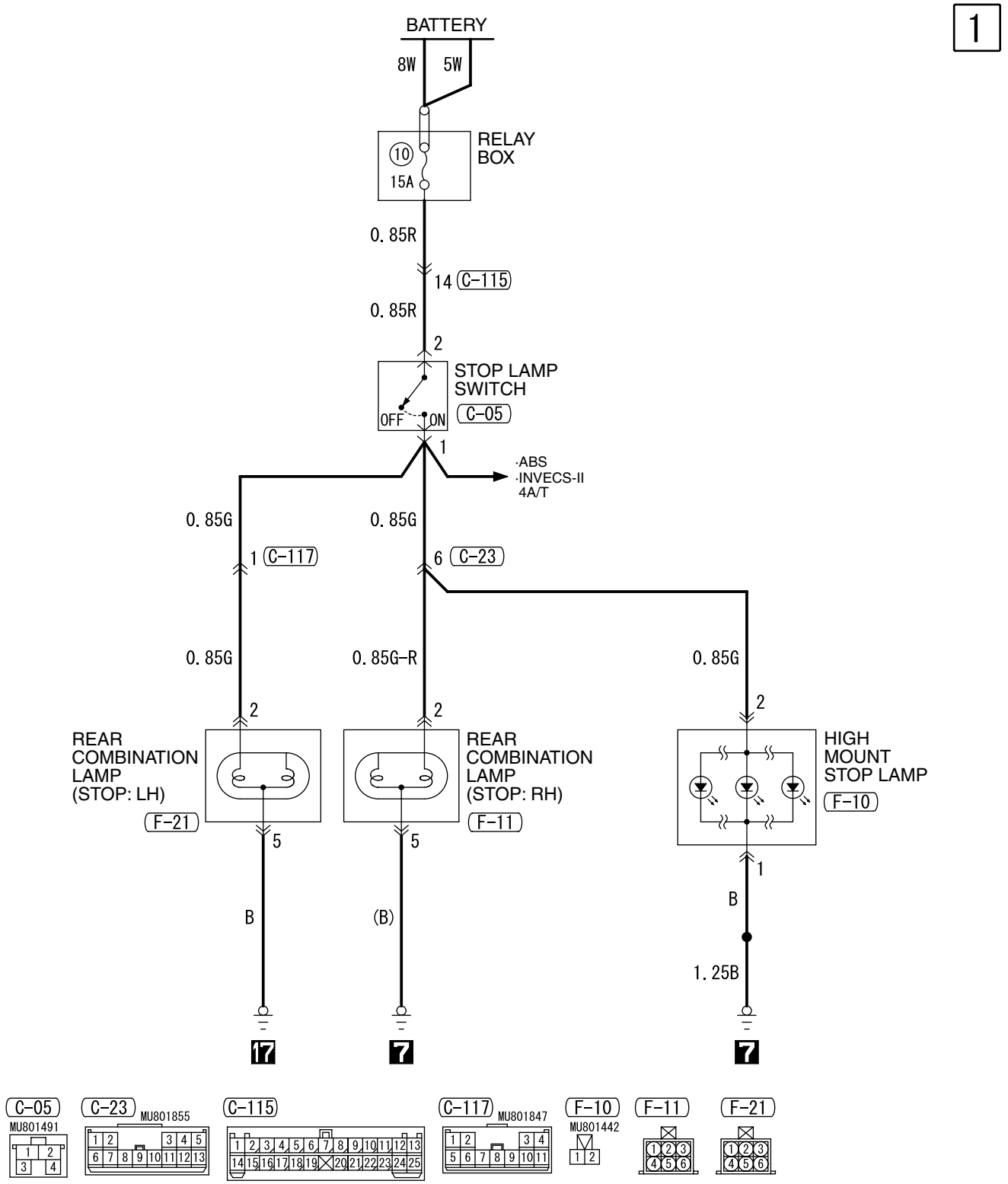

Wire colour code
B : Black LG : Light green G : Green L : Blue W : White Y : Yellow SB : Sky blue
BR : Brown O : Orange GR : Gray R : Red P : Pink V : Violet

H4J09E08AA

HORN

M1901003300592

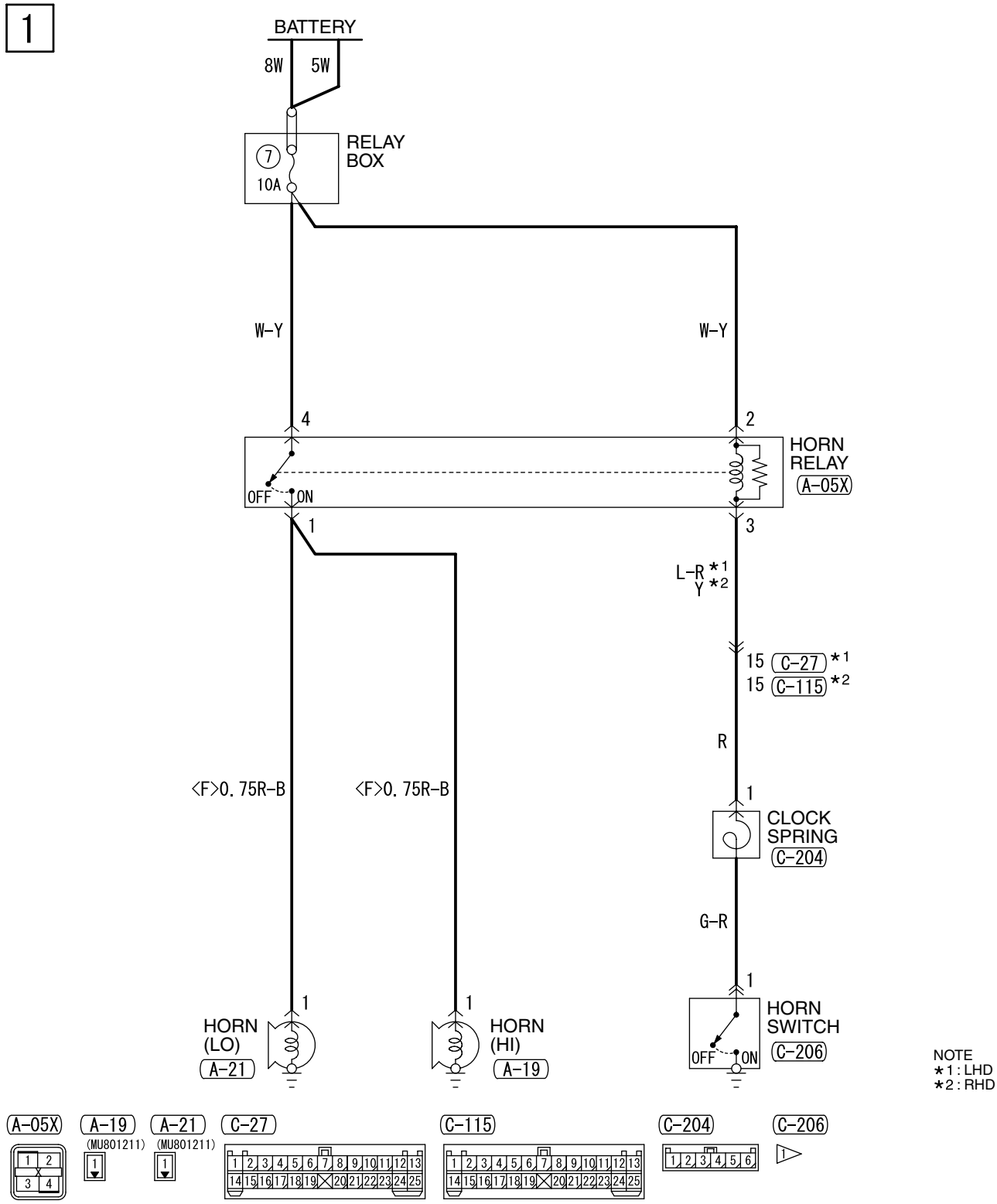

Wire colour code
B : Black LG : Light green G : Green L : Blue W : White Y : Yellow SB : Sky blue
BR : Brown O : Orange GR : Gray R : Red P : Pink V : Violet

H4J09E02AA

NOTES

METER AND GAUGE <LHD>

M1901003500626

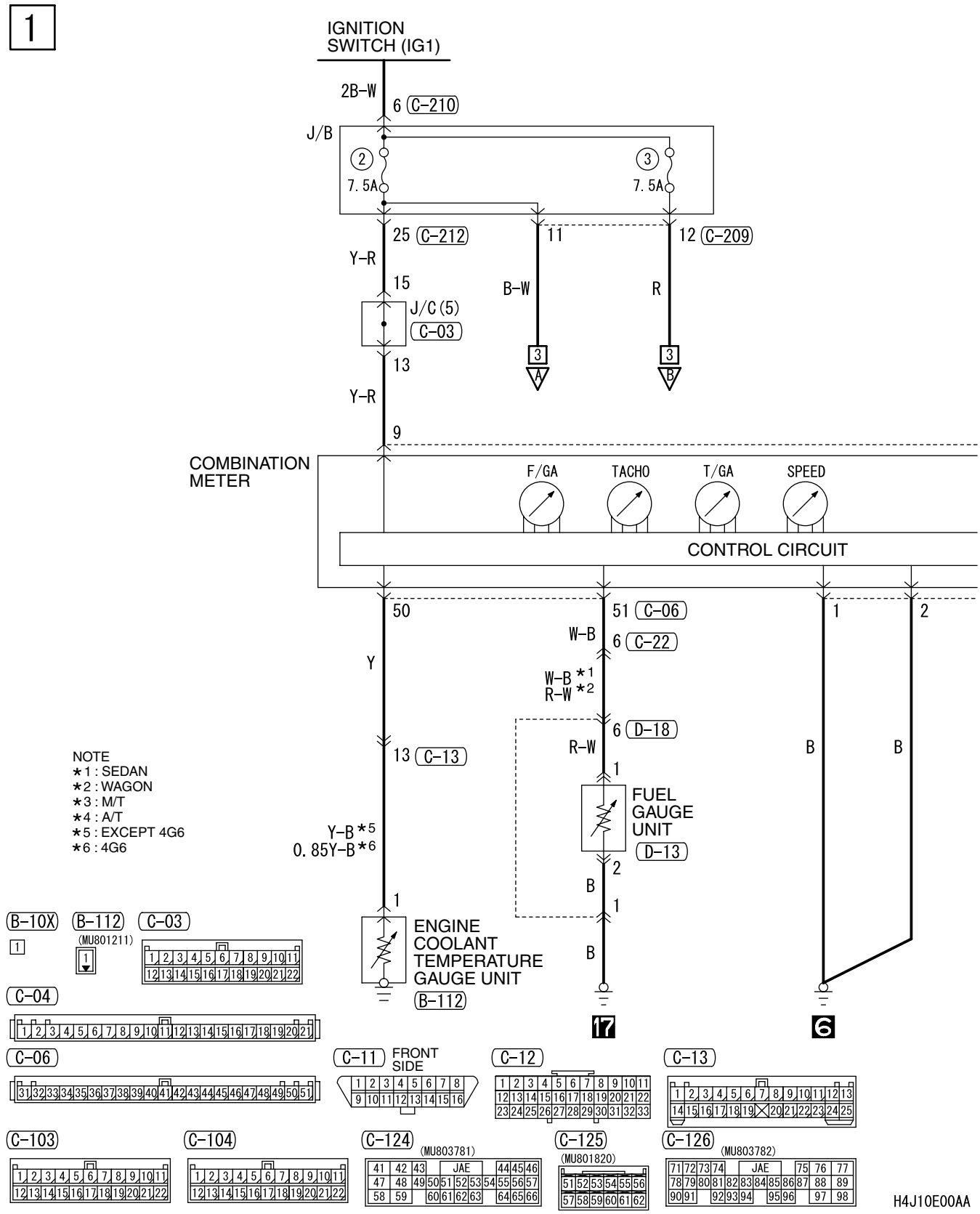

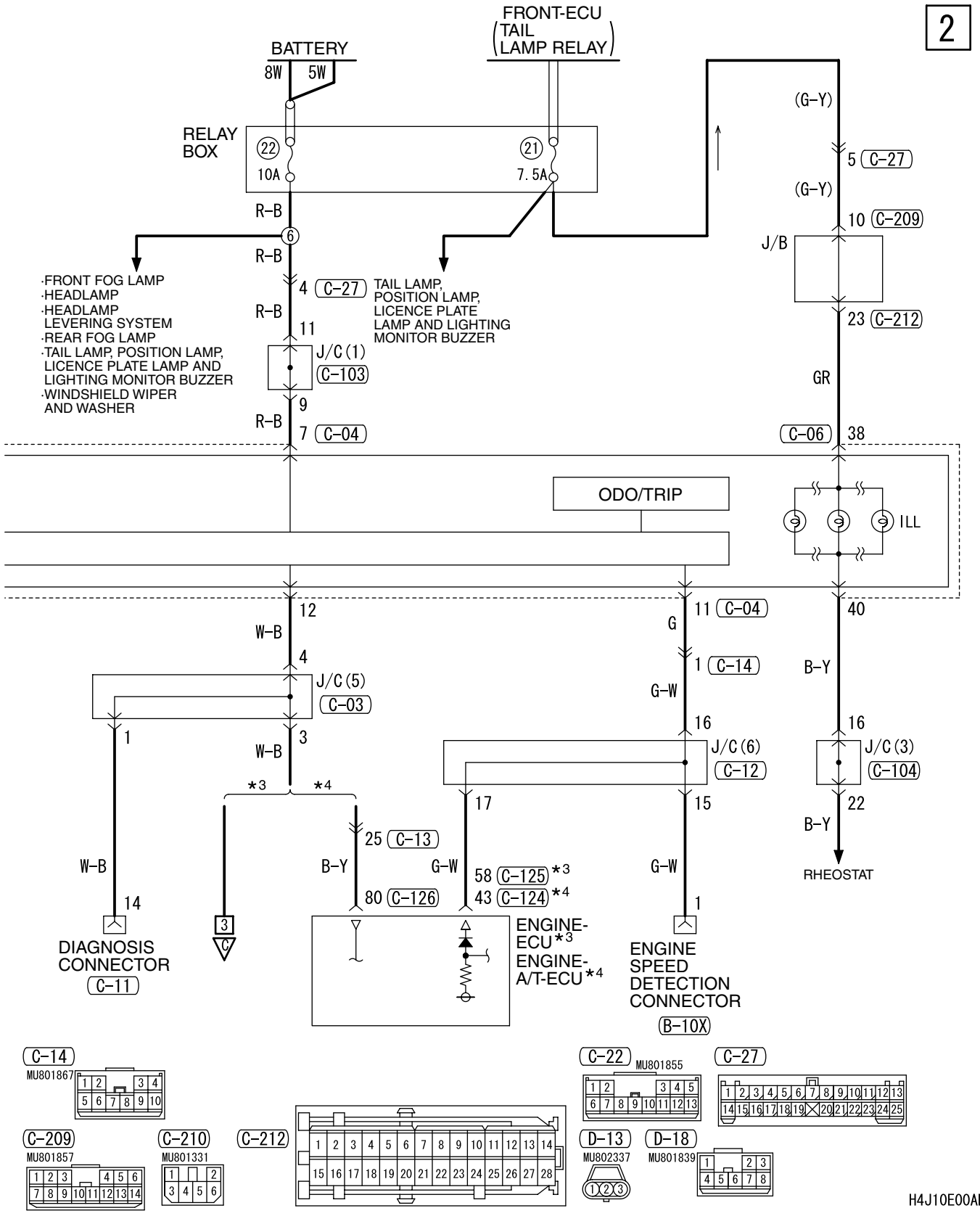
2
BATTERY
8W
5W
FRONT-ECU
(TAIL LAMP RELAY)
RELAY BOX
22
10A
21
7.5A
R-B
6
R-B
4 C-27
R-B
11
J/C (1)
C-103
9
R-B
7 C-04
·FRONT FOG LAMP
·HEADLAMP
·HEADLAMP LEVERING SYSTEM
·REAR FOG LAMP
·TAIL LAMP, POSITION LAMP, LICENCE PLATE LAMP AND LIGHTING MONITOR BUZZER
·WINDSHIELD WIPER AND WASHER
TAIL LAMP, POSITION LAMP, LICENCE PLATE LAMP AND LIGHTING MONITOR BUZZER
(G-Y)
5 C-27
(G-Y)
10 C-209
J/B
23 C-212
GR
C-06 38
ODO/TRIP
ILL
12
W-B
4
J/C (5)
C-03
1
3
W-B
*3
*4
25 C-13
B-Y
80 C-126
W-B
14
DIAGNOSIS CONNECTOR
C-11
3
C
11 C-04
G
1 C-14
G-W
16
J/C (6)
C-12
17
15
58 C-125 *3
43 C-124 *4
G-W
ENGINE-ECU *3
ENGINE-A/T-ECU *4
1
ENGINE SPEED DETECTION CONNECTOR
B-10X
40
B-Y
16
J/C (3)
C-104
22
B-Y
RHEOSTAT
C-14
MU801867
C-22
MU801855
C-27
C-209
MU801857
C-210
MU801331
C-212
D-13
MU802337
D-18
MU801839
H4J10E00AB

METER AND GAUGE <LHD> (CONTINUED)

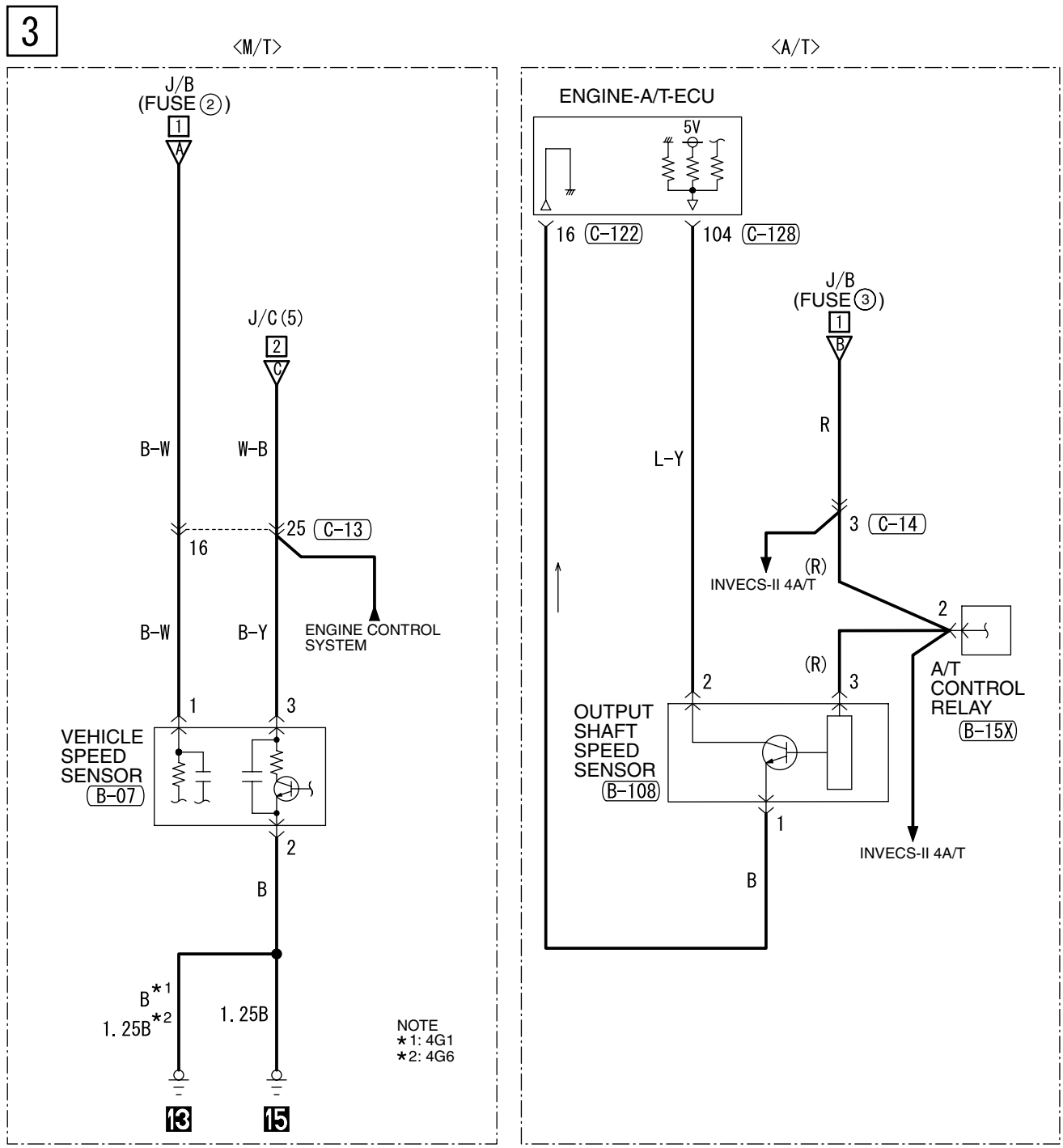

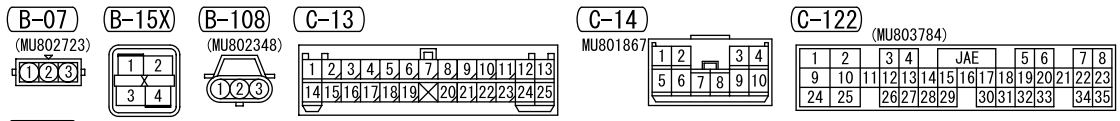

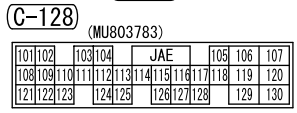

Wire colour code
B : Black LG : Light green G : Green L : Blue
W : White Y : Yellow SB : Sky blue BR : Brown
O : Orange GR : Gray R : Red P : Pink V : Violet

H4J10E00BA

NOTES

METER AND GAUGE <RHD>

M1901003500637

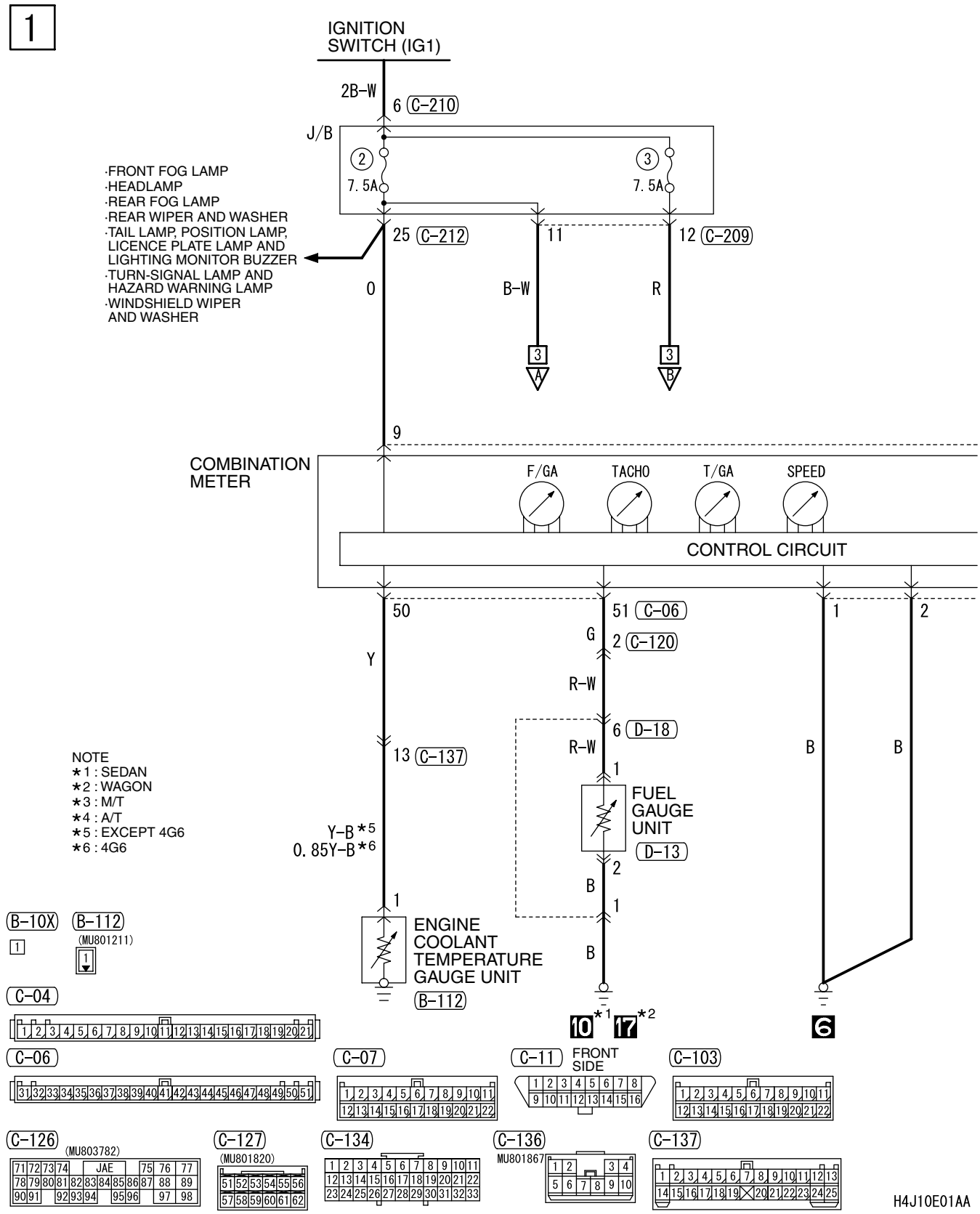

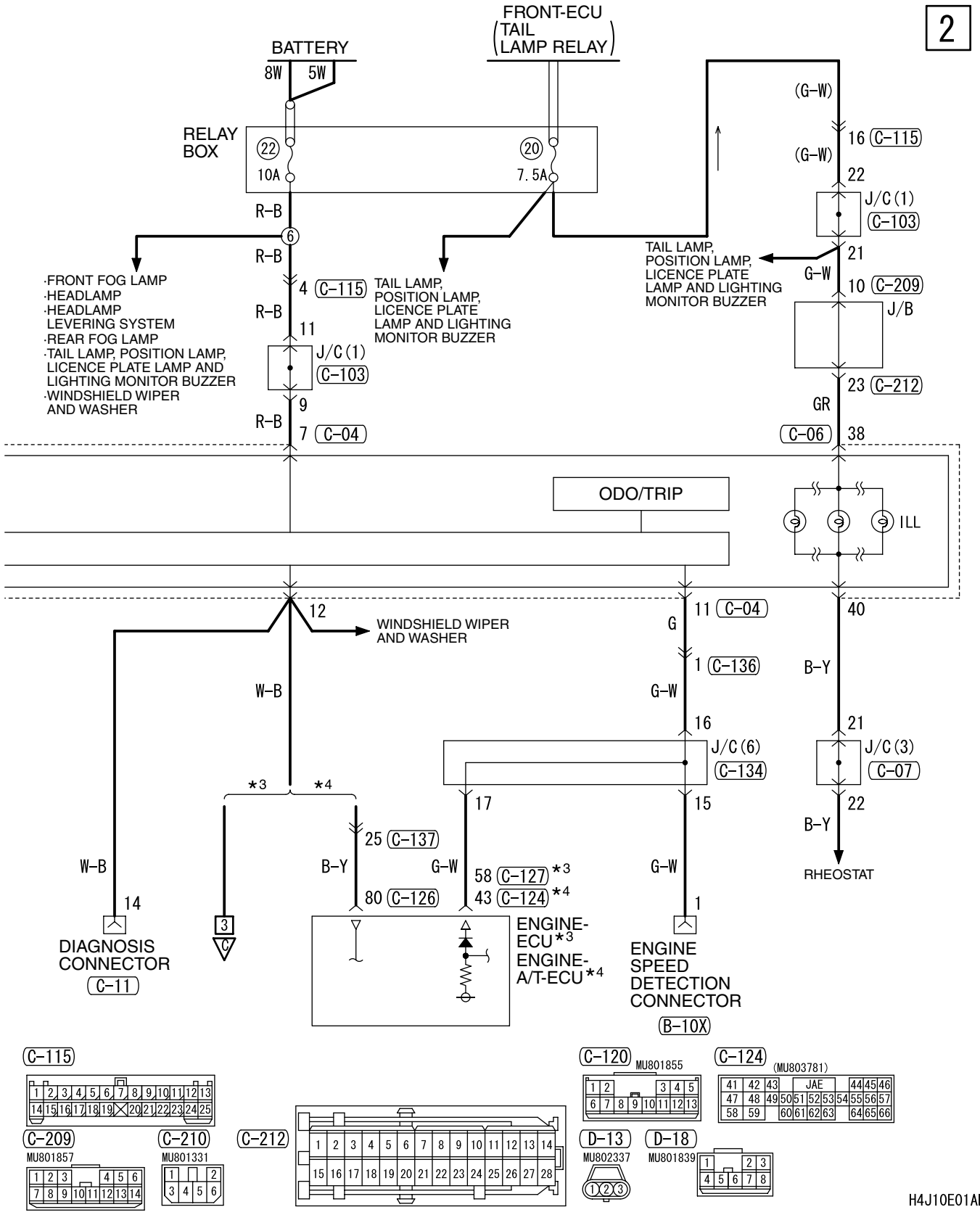
2
BATTERY
8W
5W
FRONT-ECU
(TAIL
LAMP RELAY)
RELAY
BOX
22
10A
20
7.5A
R-B
6
R-B
·FRONT FOG LAMP
·HEADLAMP
·HEADLAMP
LEVERING SYSTEM
·REAR FOG LAMP
·TAIL LAMP, POSITION LAMP,
LICENCE PLATE LAMP AND
LIGHTING MONITOR BUZZER
·WINDSHIELD WIPER
AND WASHER
4 C-115
R-B
11
J/C (1)
C-103
9
R-B
7 C-04
TAIL LAMP,
POSITION LAMP,
LICENCE PLATE
LAMP AND LIGHTING
MONITOR BUZZER
(G-W)
16 C-115
(G-W)
22
J/C (1)
C-103
TAIL LAMP,
POSITION LAMP,
LICENCE PLATE
LAMP AND LIGHTING
MONITOR BUZZER
21
G-W
10 C-209
J/B
23 C-212
GR
C-06 38
ODO/TRIP
ILL
12
WINDSHIELD WIPER
AND WASHER
W-B
11 C-04
G
1 C-136
G-W
16
J/C (6)
C-134
40
B-Y
21
J/C (3)
C-07
22
B-Y
RHEOSTAT
*3
*4
25 C-137
B-Y
G-W
58 C-127 *3
43 C-124 *4
80 C-126
17
15
G-W
W-B
14
DIAGNOSIS
CONNECTOR
C-11
3
C
ENGINE-
ECU *3
ENGINE-
A/T-ECU *4
1
ENGINE
SPEED
DETECTION
CONNECTOR
B-10X
C-115
C-209
MU801857
C-210
MU801331
C-212
C-120
MU801855
C-124
(MU803781)
JAE
D-13
MU802337
D-18
MU801839
H4J10E01AB

METER AND GAUGE <RHD> (CONTINUED)

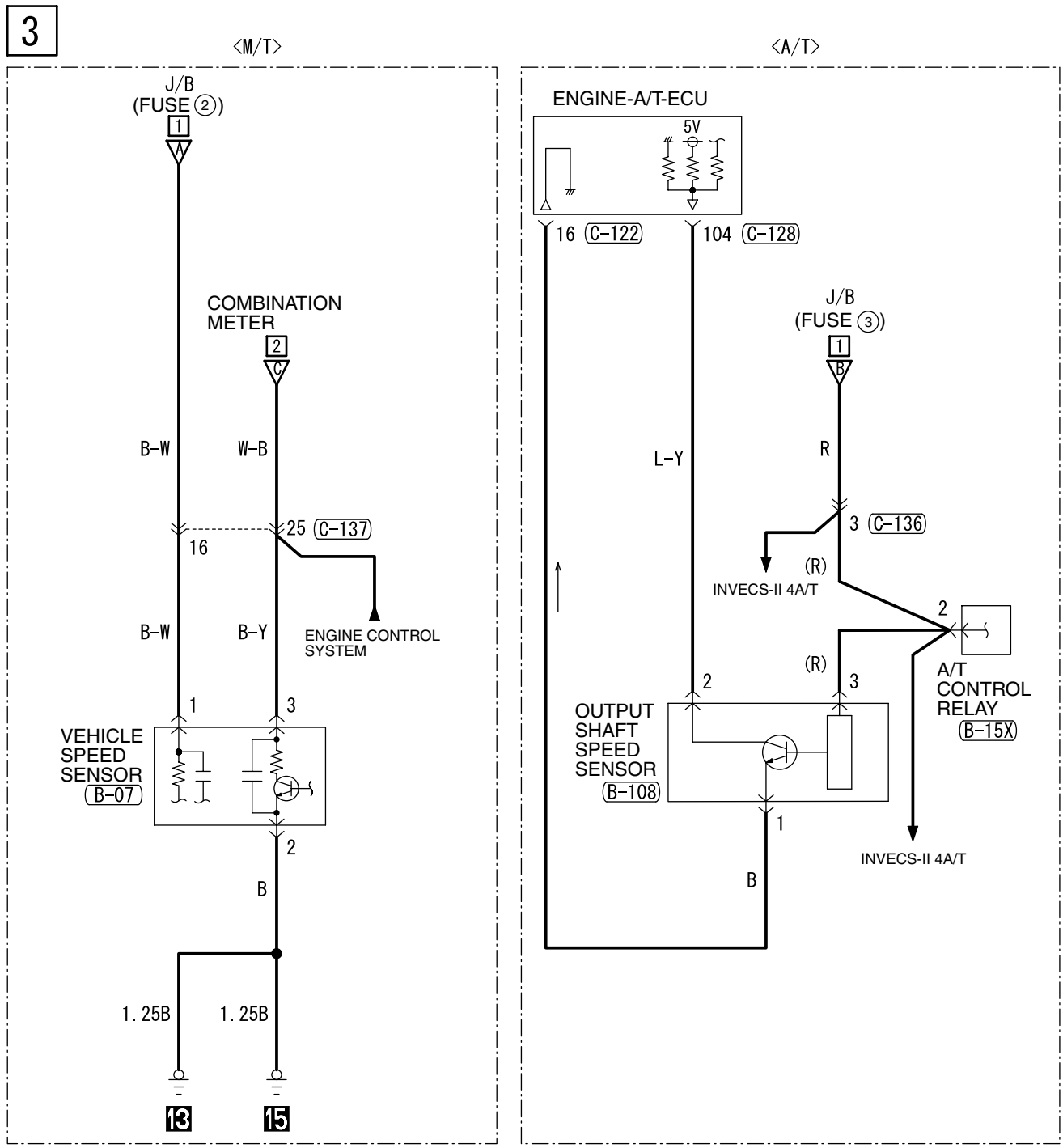

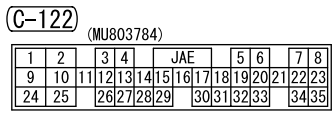

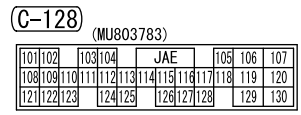

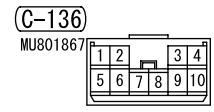

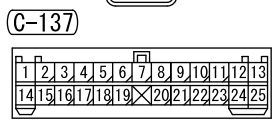

Wire colour code
B : Black LG : Light green G : Green L : Blue
W : White Y : Yellow SB : Sky blue BR : Brown
O : Orange GR : Gray R : Red P : Pink V : Violet

H4J10E01BA

NOTES

FUEL WARNING LAMP, OIL PRESSURE WARNING LAMP, BRAKE WARNING LAMP <LHD>

M1901018700013

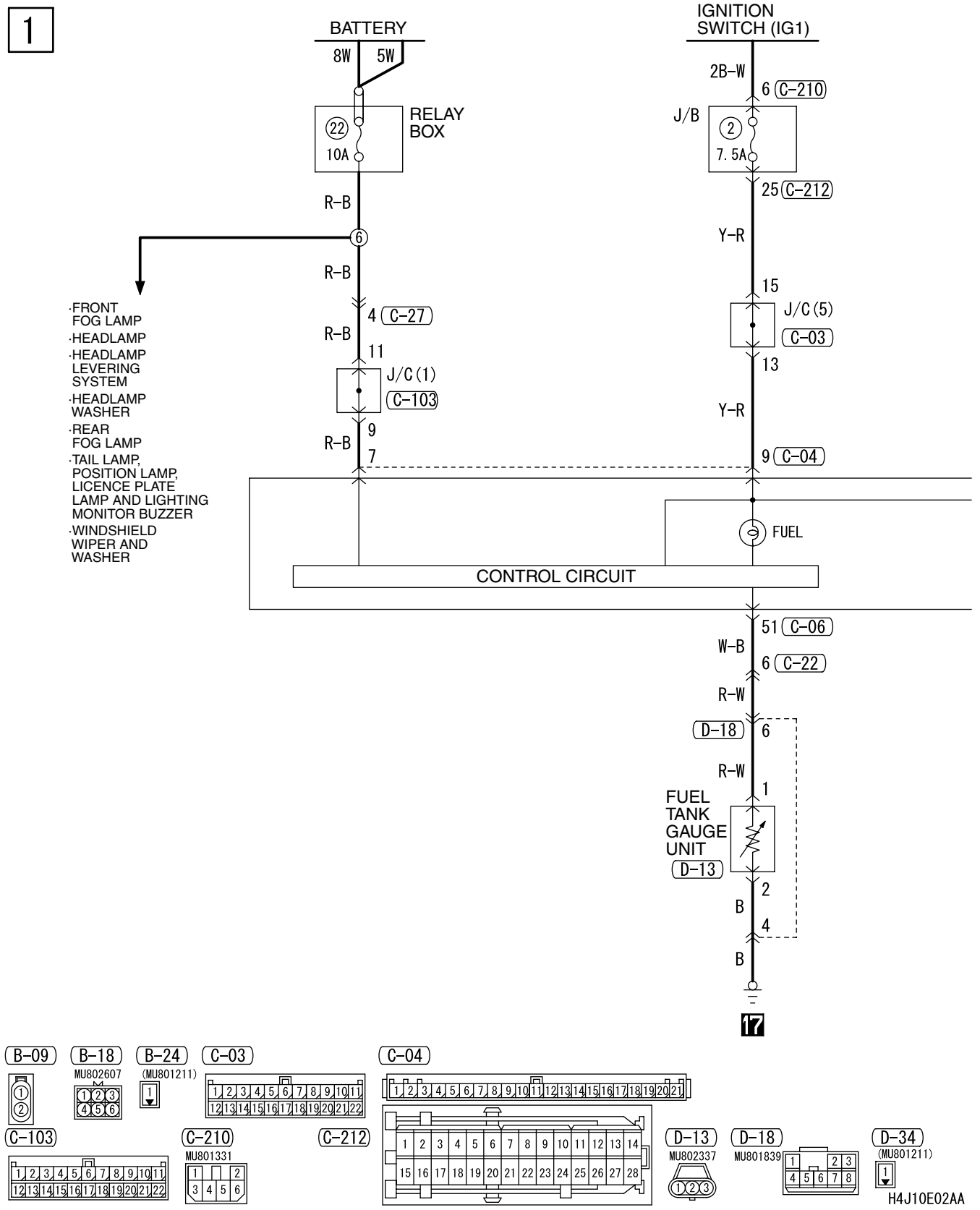

2

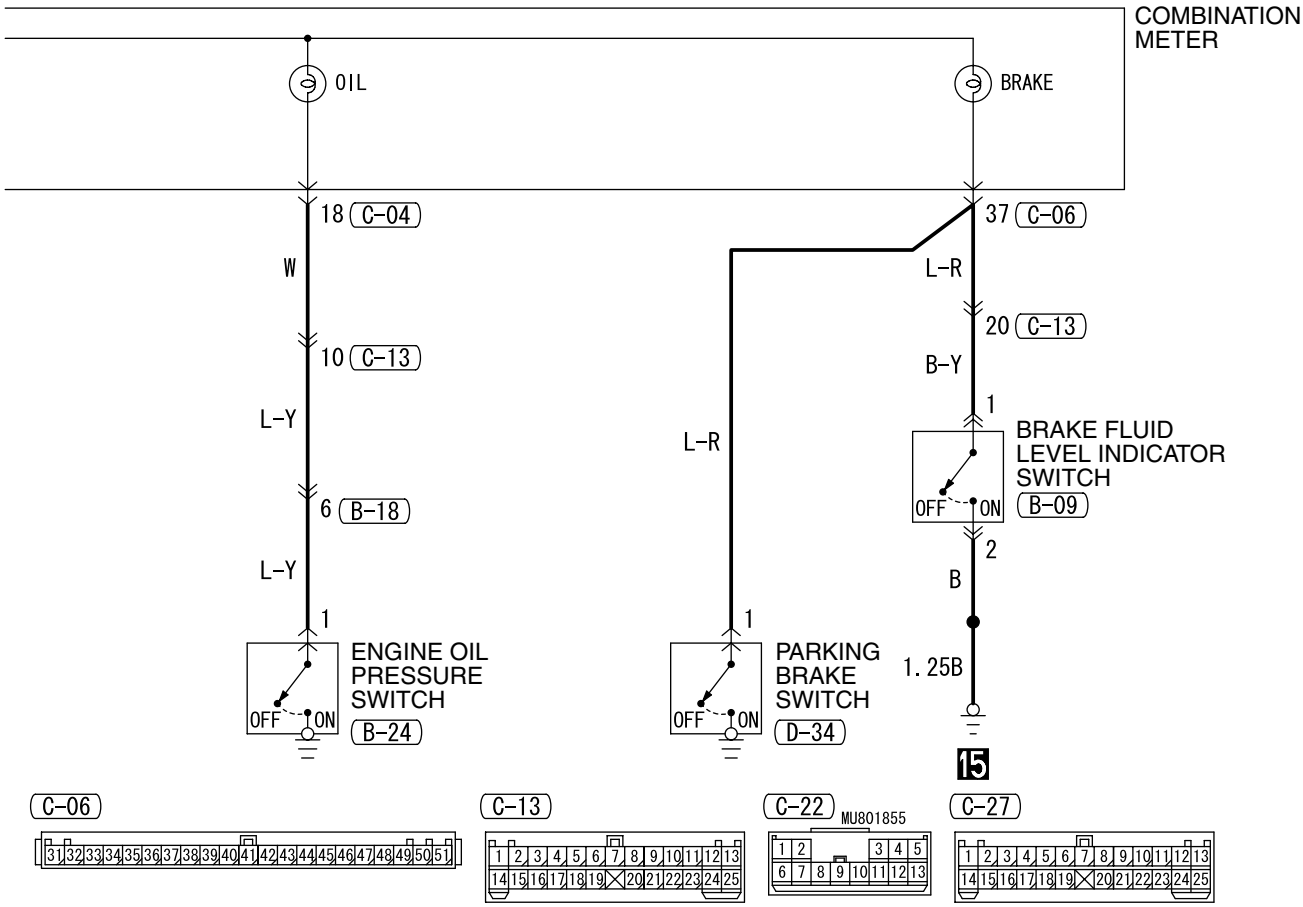

Wire colour code
B : Black LG : Light green G : Green L : Blue W : White Y : Yellow SB : Sky blue
BR : Brown O : Orange GR : Gray R : Red P : Pink V : Violet

H4J10E02AB

FUEL WARNING LAMP, OIL PRESSURE WARNING LAMP, BRAKE WARNING LAMP <RHD>

M1901018700024

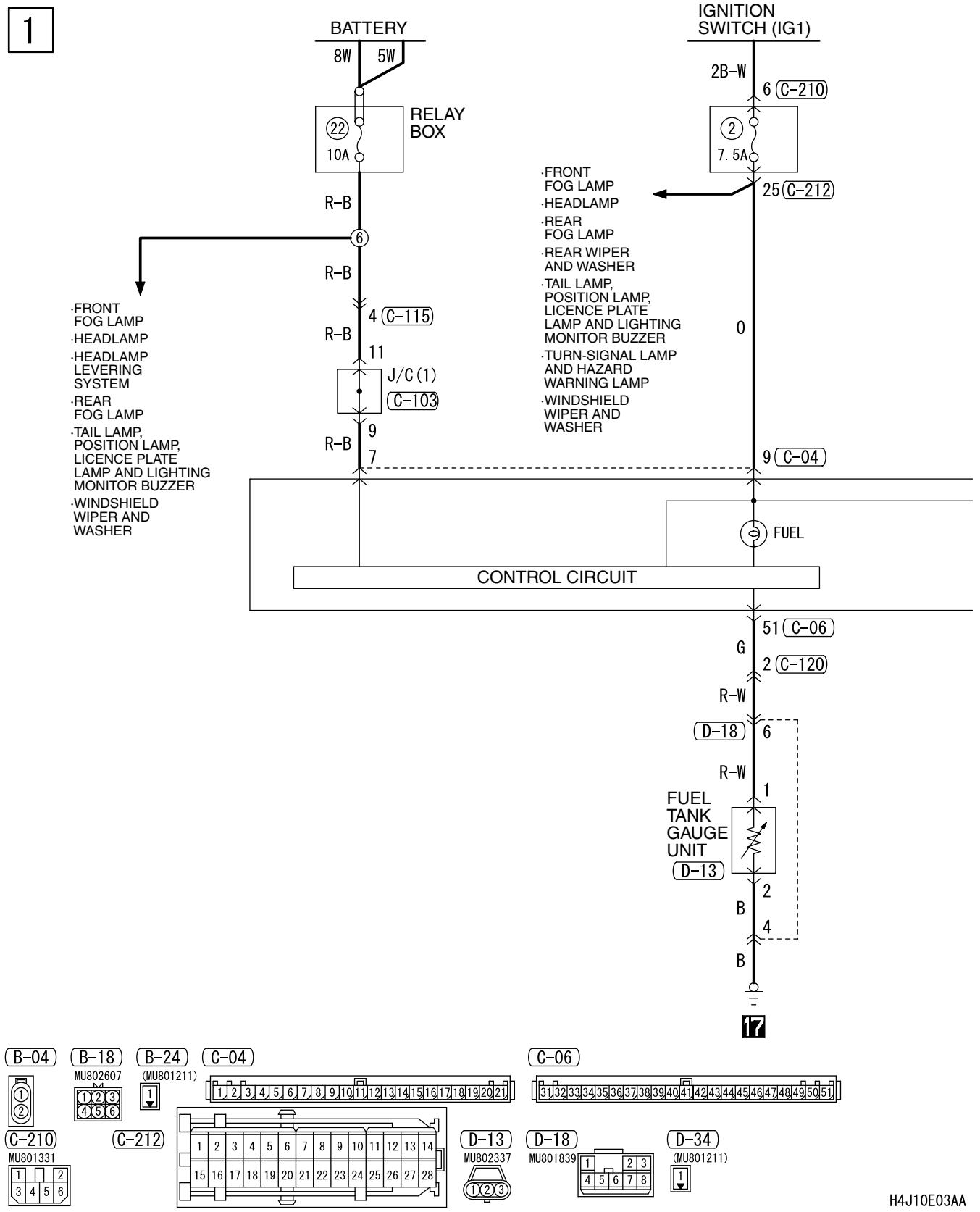

2

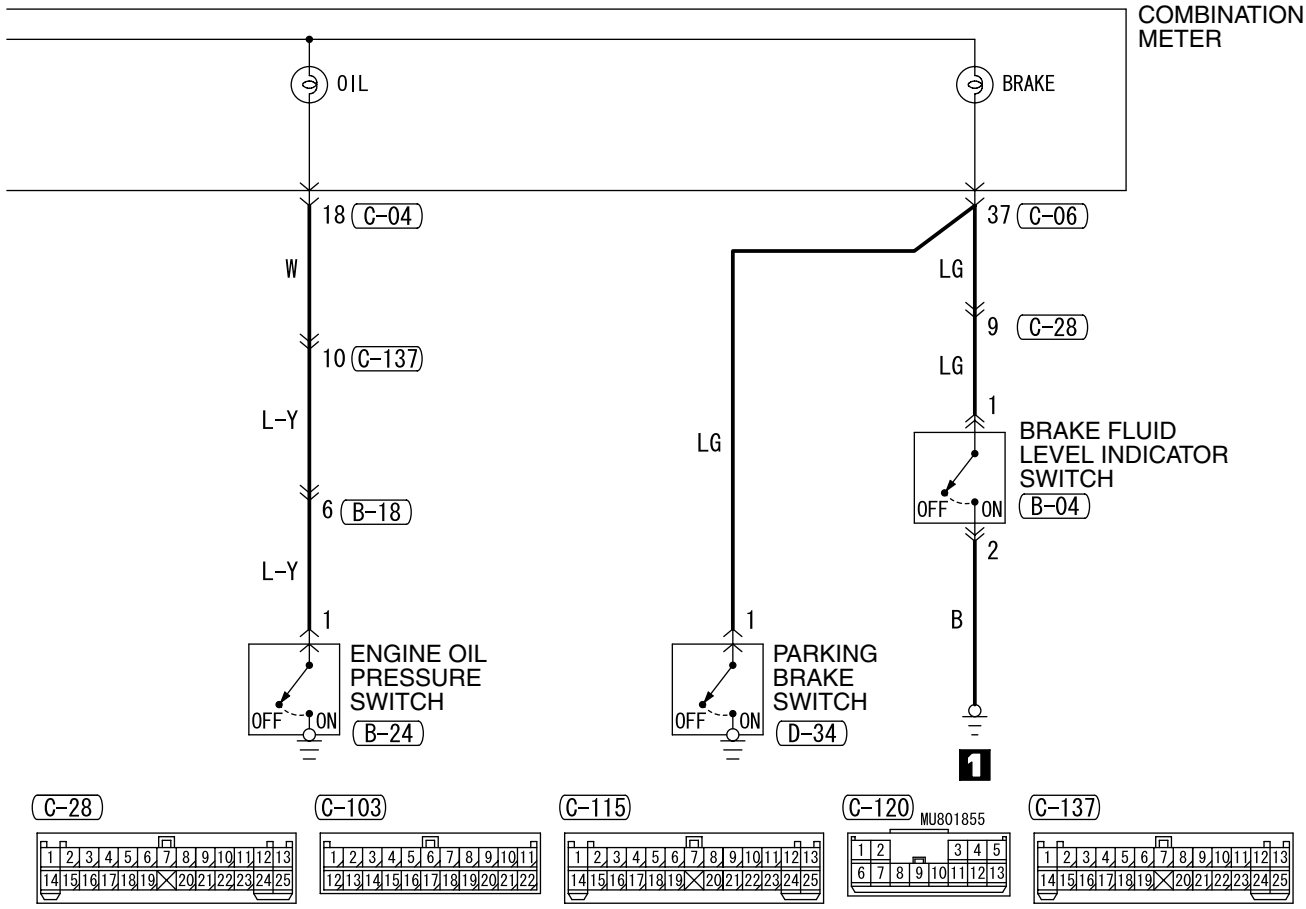

Wire colour code
B : Black LG : Light green G : Green L : Blue W : White Y : Yellow SB : Sky blue
BR : Brown O : Orange GR : Gray R : Red P : Pink V : Violet

H4J10E03AB

POWER WINDOWS <LHD>

M1901004600745

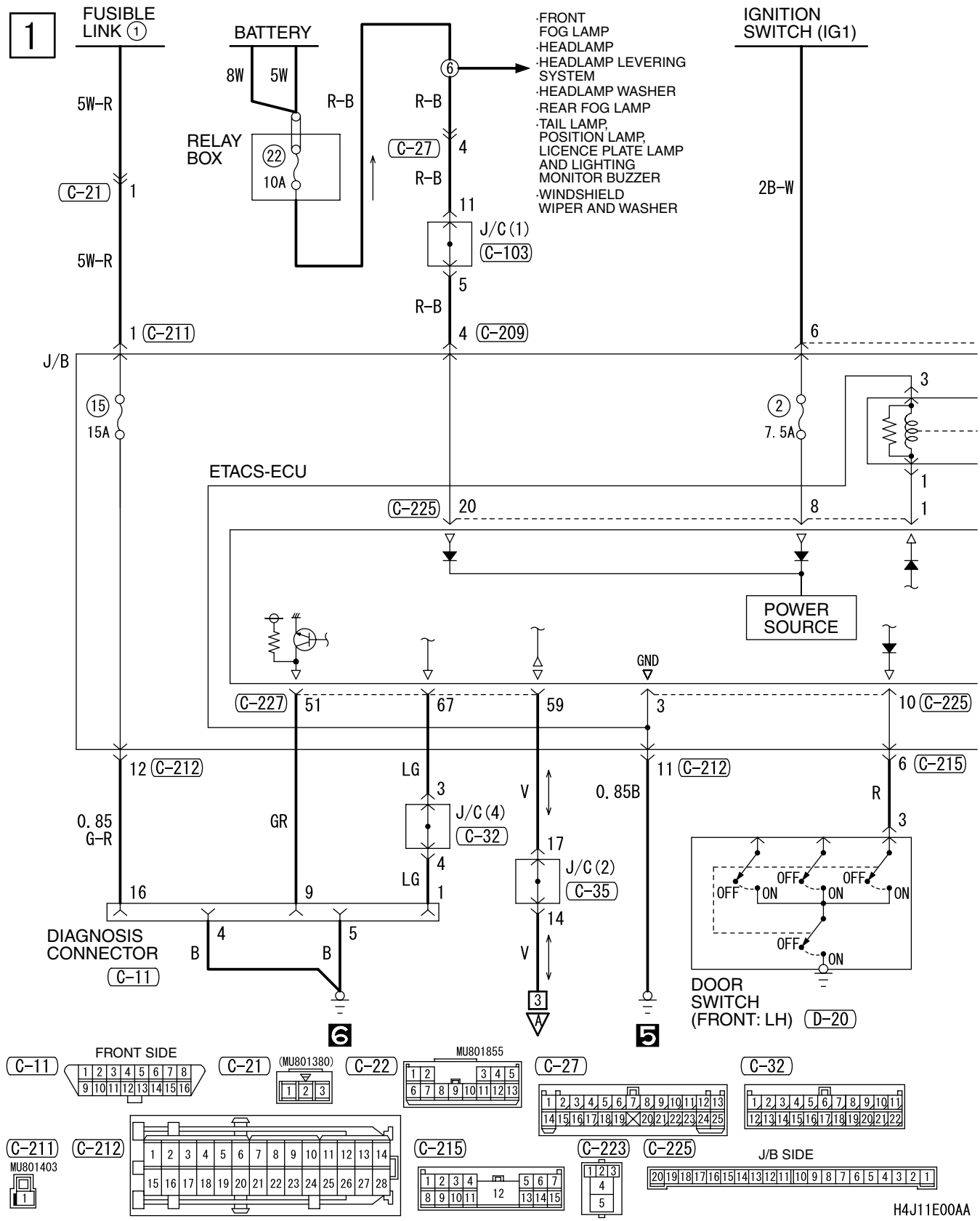

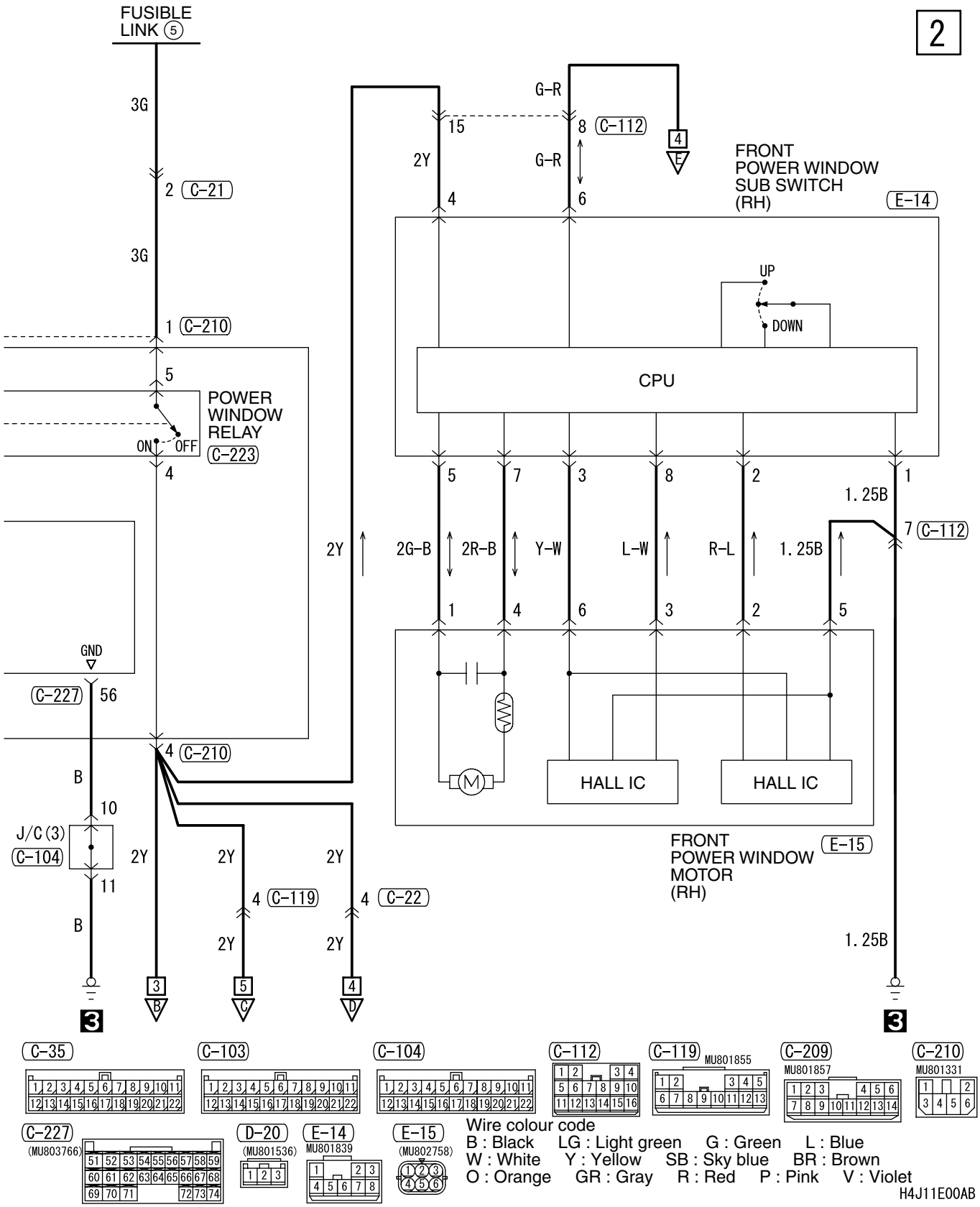
FUSIBLE LINK (5)
2
3G
2 (C-21)
3G
1 (C-210)
5
POWER WINDOW RELAY
ON
OFF
(C-223)
4
GND
(C-227) 56
4 (C-210)
B
10
J/C (3)
(C-104)
2Y
11
B
2Y
4 (C-119)
2Y
2Y
4 (C-22)
2Y
3
B
5
C
4
D
3
2Y
2G-B
2R-B
Y-W
L-W
R-L
1.25B
G-R
15
8 (C-112)
4
E
2Y
G-R
4
6
FRONT POWER WINDOW SUB SWITCH (RH)
(E-14)
UP
DOWN
CPU
5
7
3
8
2
1
1.25B
7 (C-112)
1
4
6
3
2
5
HALL IC
HALL IC
M
FRONT POWER WINDOW MOTOR (RH)
(E-15)
1.25B
3
C-35
C-103
C-104
C-112
C-119
MU801855
C-209
MU801857
C-210
MU801331
C-227
(MU803766)
D-20
(MU801536)
E-14
MU801839
E-15
(MU802758)
Wire colour code
B : Black LG : Light green G : Green L : Blue
W : White Y : Yellow SB : Sky blue BR : Brown
O : Orange GR : Gray R : Red P : Pink V : Violet
H4J11E00AB

POWER WINDOWS <LHD> (CONTINUED)

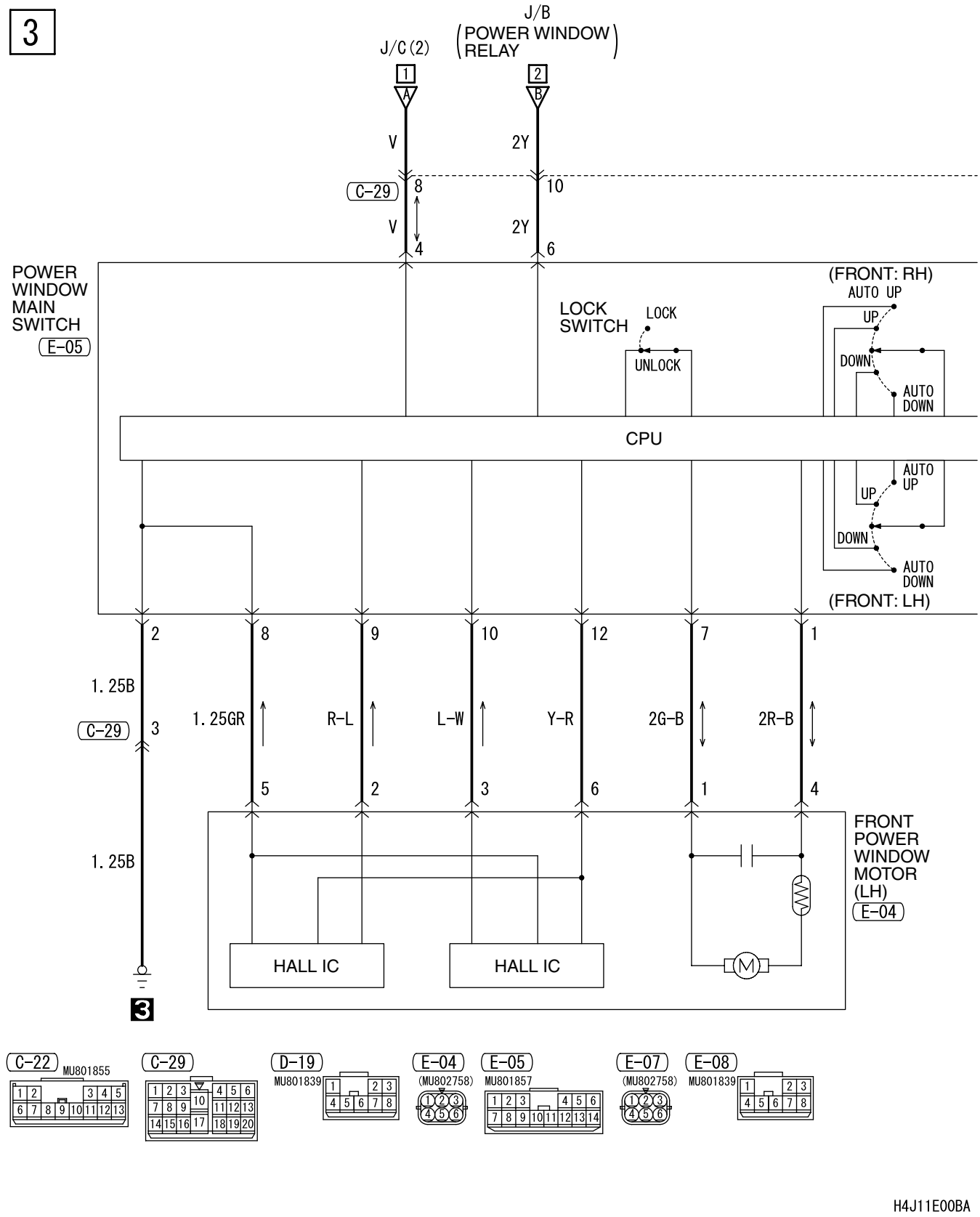

H4J11E00BA

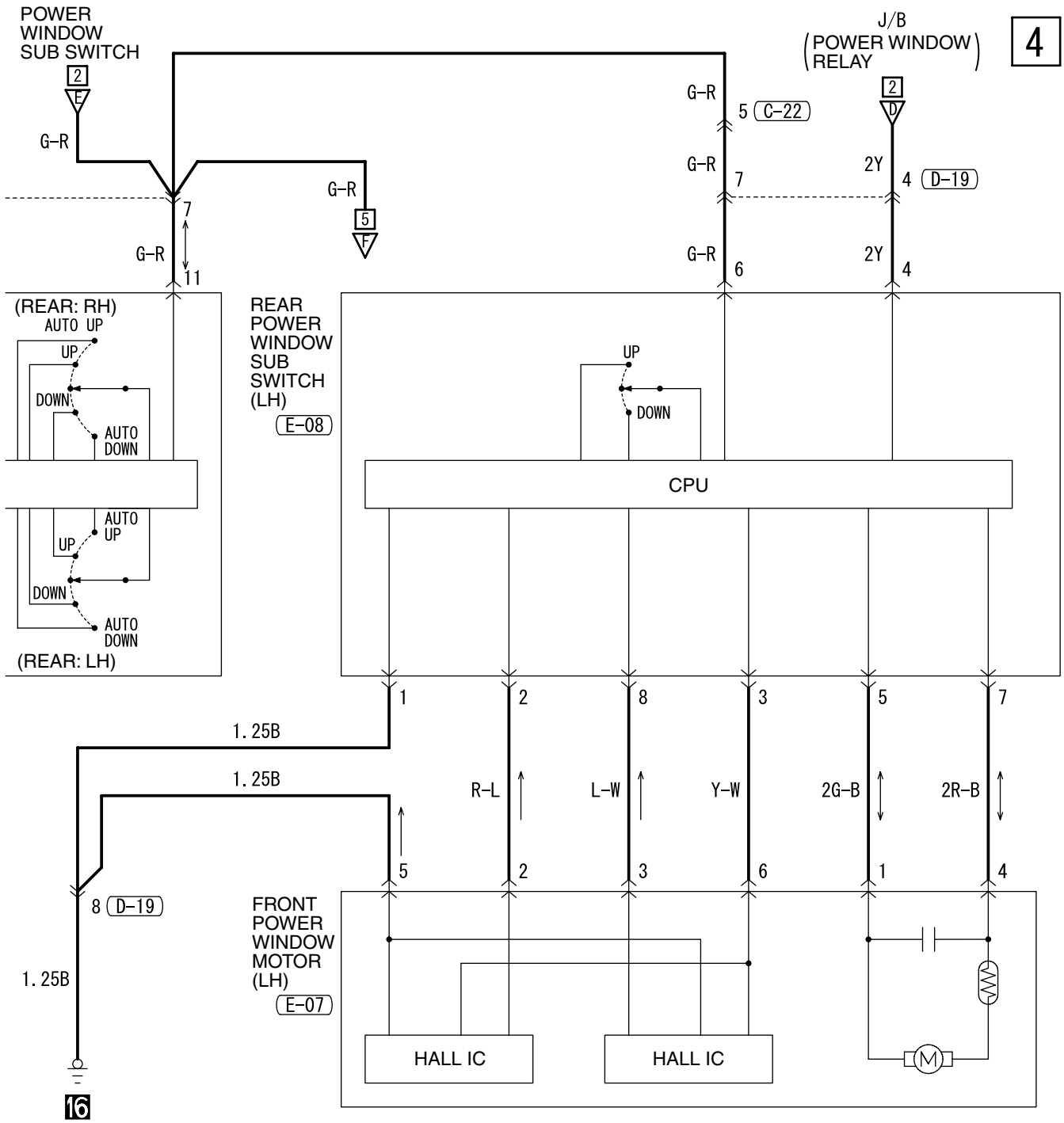

Wire colour code
B : Black LG : Light green G : Green L : Blue W : White Y : Yellow SB : Sky blue
BR : Brown O : Orange GR : Gray R : Red P : Pink V : Violet

H4J11E00BB

POWER WINDOWS <LHD> (CONTINUED)

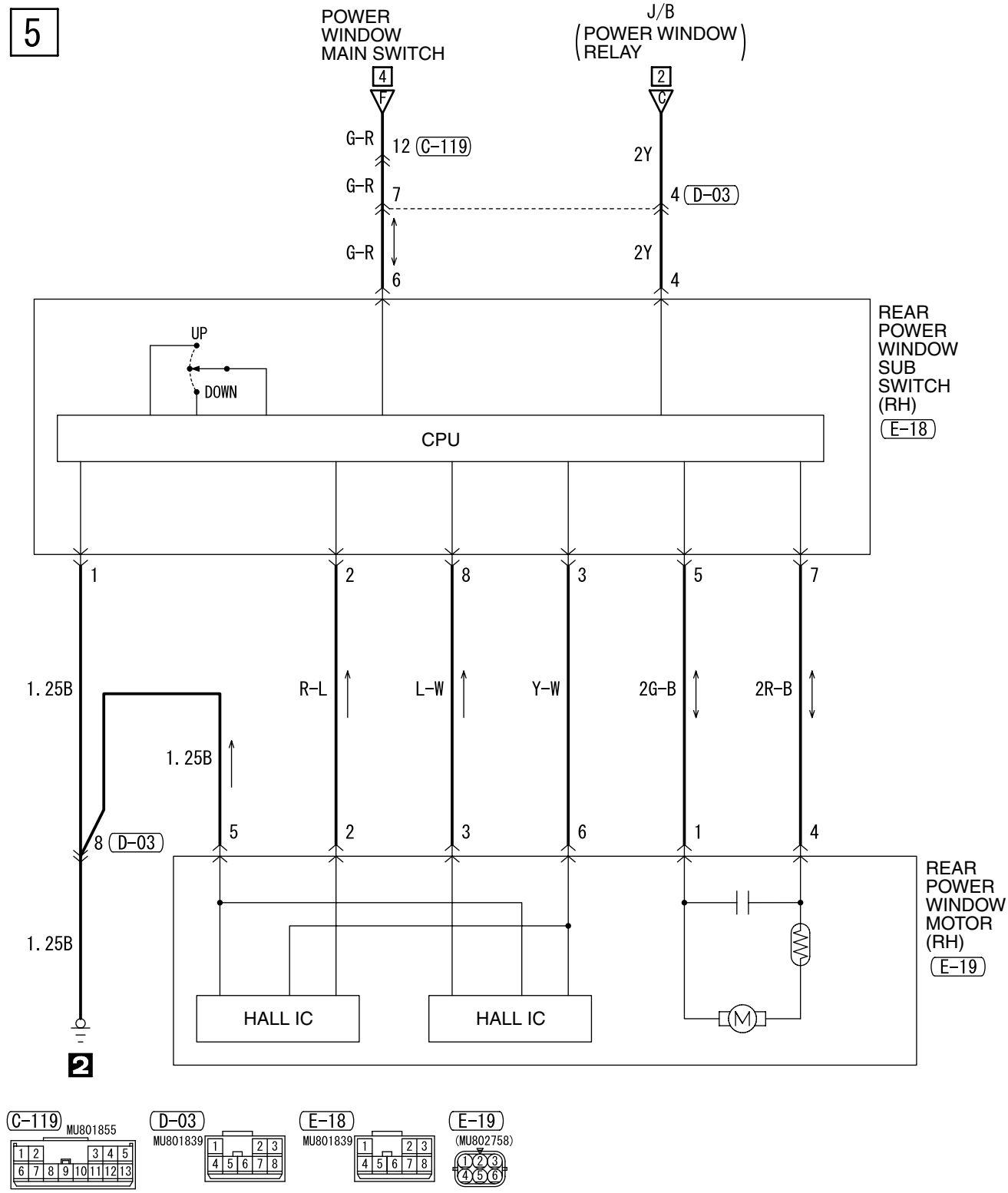

Wire colour code
B : Black LG : Light green G : Green L : Blue W : White Y : Yellow SB : Sky blue
BR : Brown O : Orange GR : Gray R : Red P : Pink V : Violet

H4J11E00CA

NOTES

POWER WINDOWS <RHD>

M1901004600756

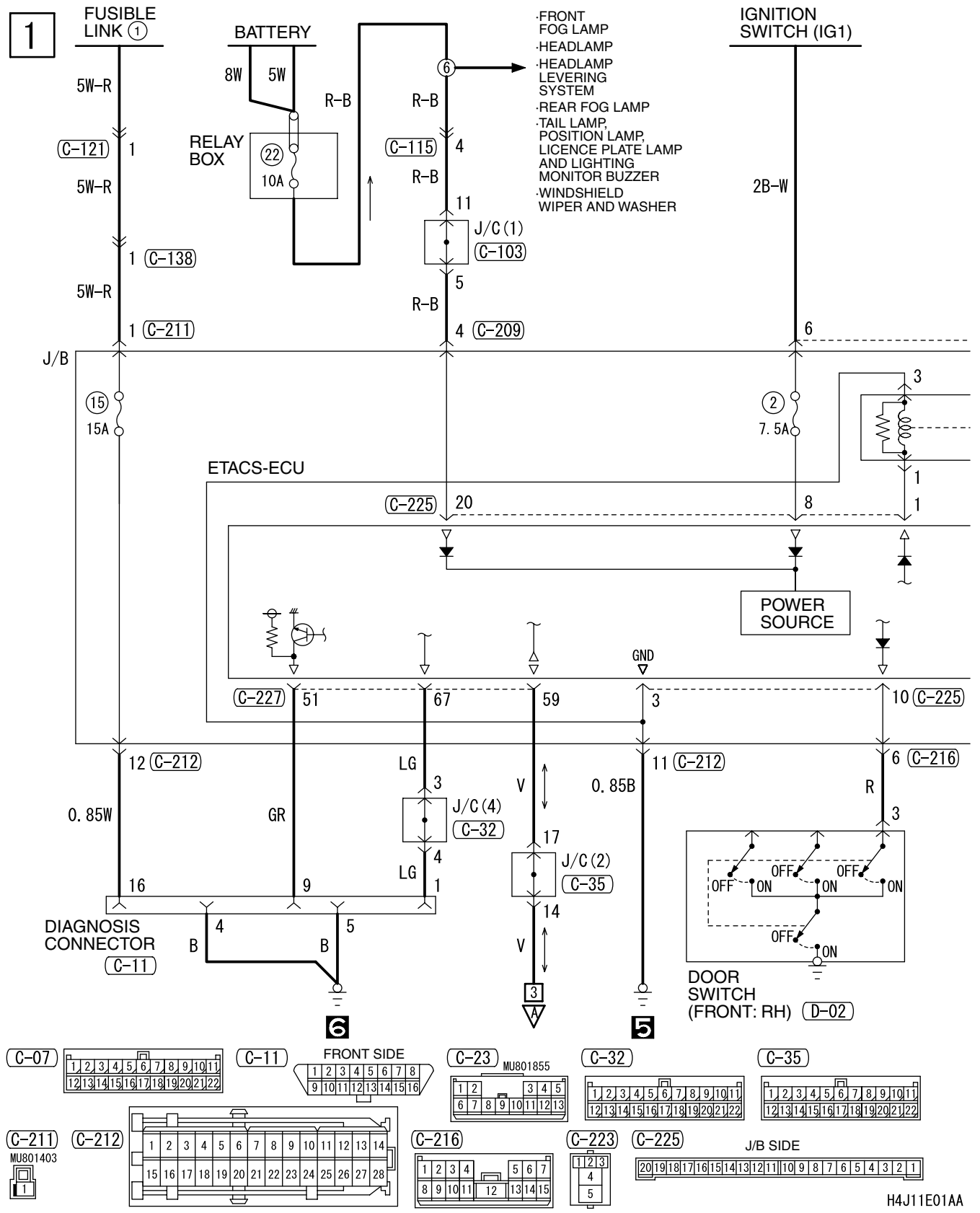

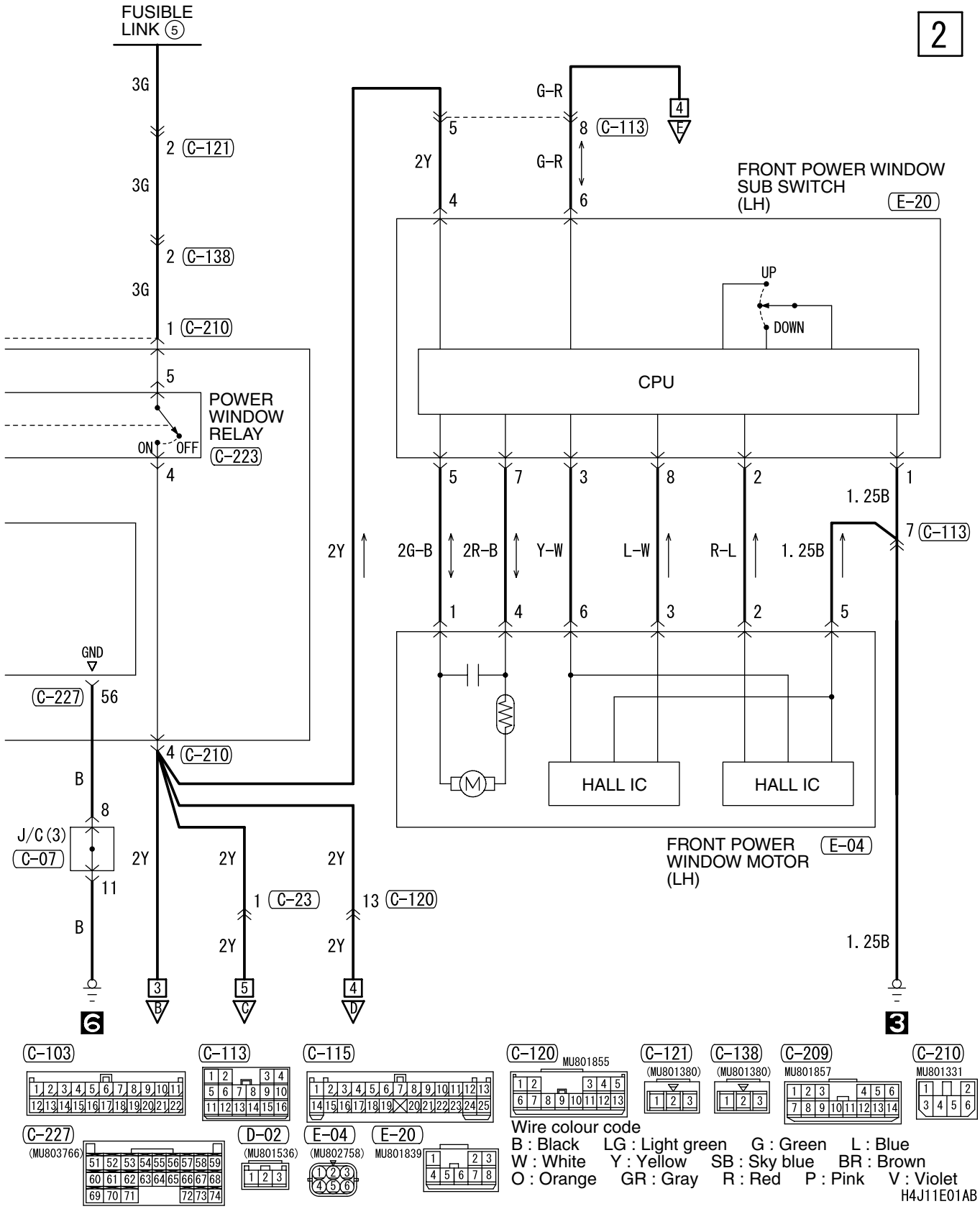
FUSIBLE LINK 5
2
3G
2 C-121
3G
2 C-138
3G
1 C-210
5
POWER WINDOW RELAY
ON
OFF
C-223
4
GND
C-227 56
4 C-210
B
8
J/C (3)
C-07
11
B
2Y
2Y
2Y
1 C-23
13 C-120
2Y
2Y
3
B
5
C
4
D
6
G-R
5
8 C-113
4
E
2Y
G-R
4
6
FRONT POWER WINDOW SUB SWITCH (LH)
E-20
UP
DOWN
CPU
5
7
3
8
2
1
1.25B
7 C-113
2Y
2G-B
2R-B
Y-W
L-W
R-L
1.25B
1
4
6
3
2
5
HALL IC
HALL IC
FRONT POWER WINDOW MOTOR (LH)
E-04
1.25B
3
C-103
C-113
C-115
C-120
MU801855
C-121
(MU801380)
C-138
(MU801380)
C-209
MU801857
C-210
MU801331
C-227
(MU803766)
D-02
(MU801536)
E-04
(MU802758)
E-20
MU801839
Wire colour code
B : Black LG : Light green G : Green L : Blue
W : White Y : Yellow SB : Sky blue BR : Brown
O : Orange GR : Gray R : Red P : Pink V : Violet
H4J11E01AB

POWER WINDOWS <RHD> (CONTINUED)

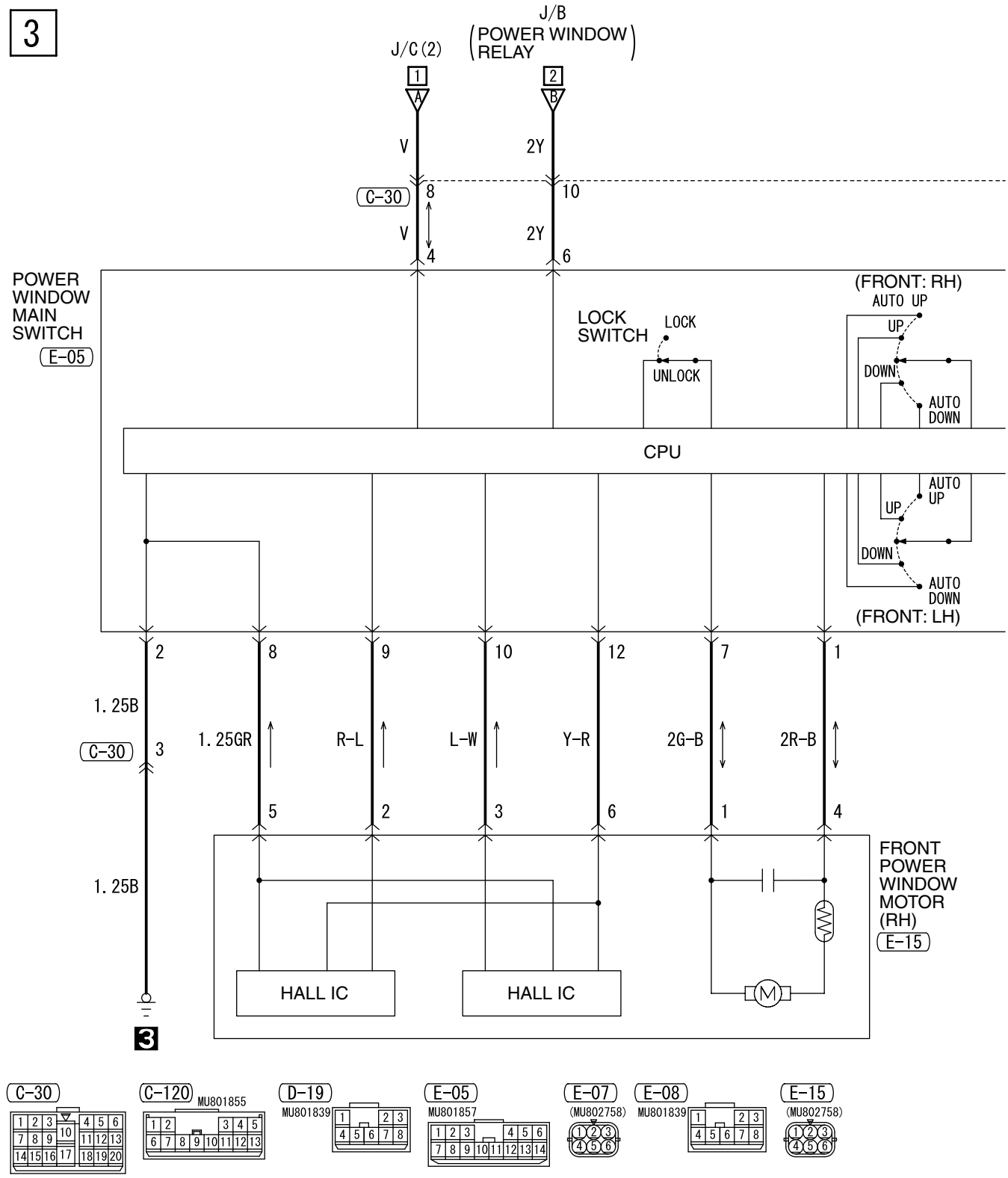

H4J11E01BA

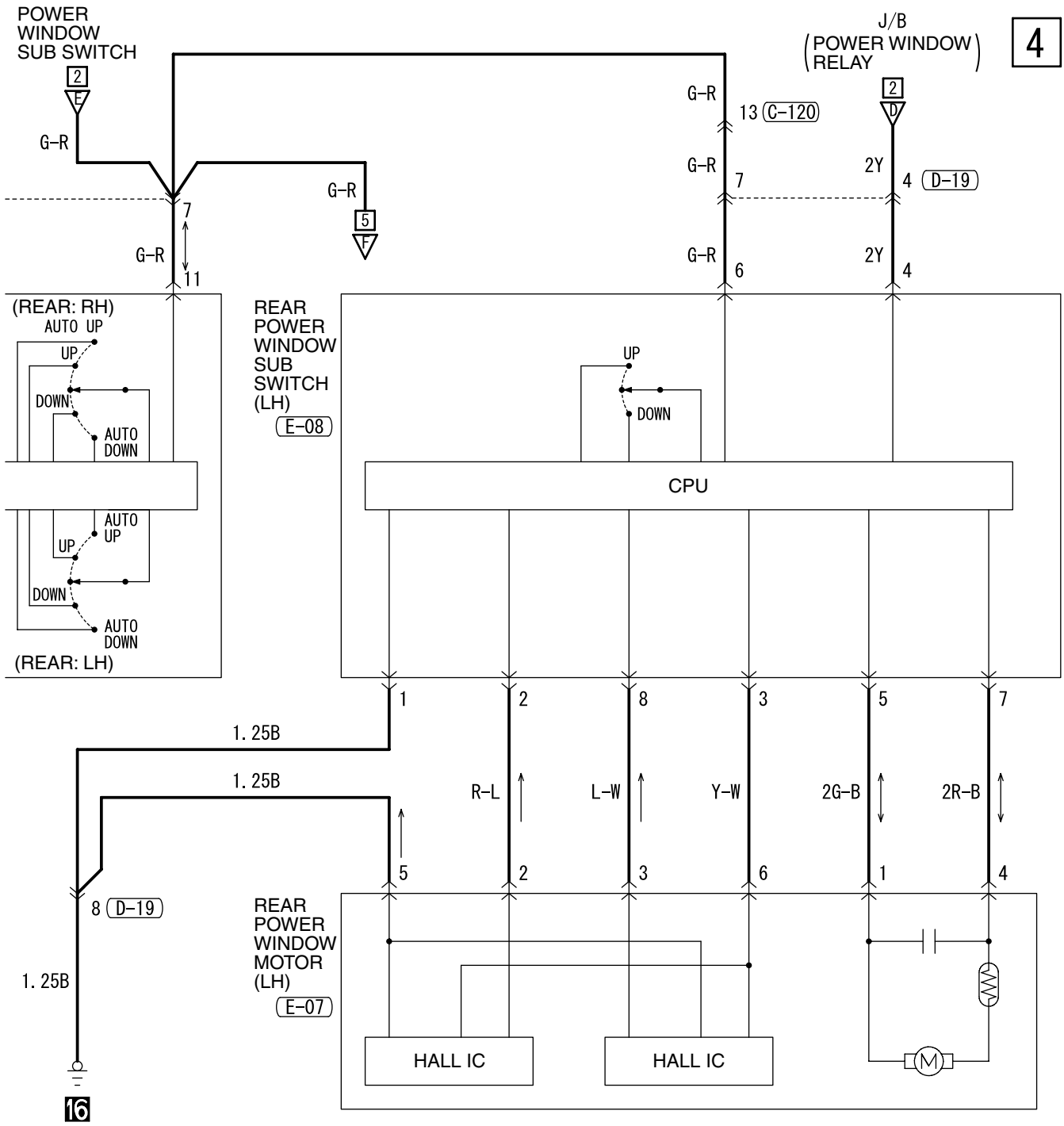

Wire colour code
B : Black LG : Light green G : Green L : Blue W : White Y : Yellow SB : Sky blue
BR : Brown O : Orange GR : Gray R : Red P : Pink V : Violet

H4J11E01BB

POWER WINDOWS <RHD> (CONTINUED)

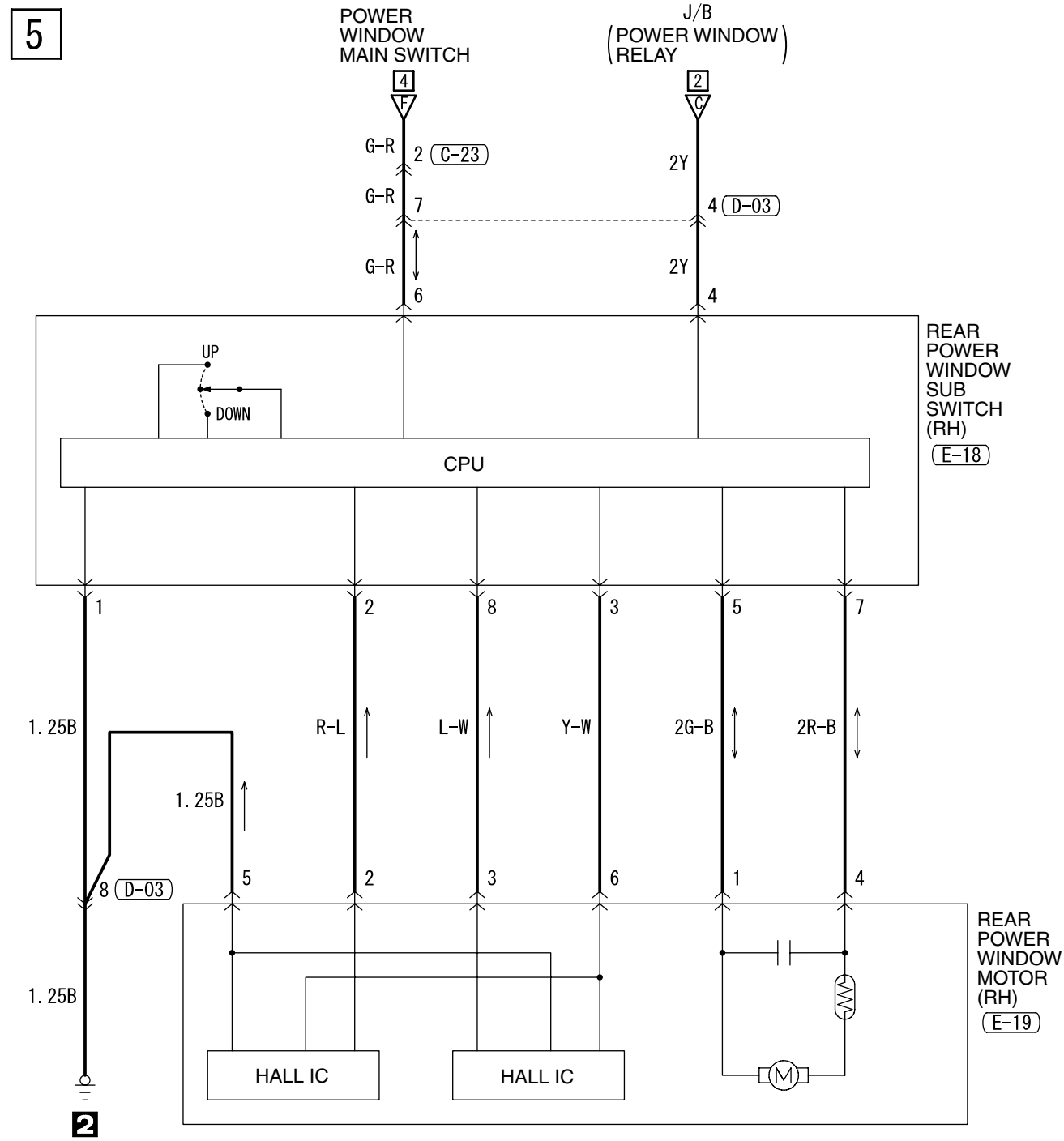

Wire colour code
B : Black LG : Light green G : Green L : Blue W : White Y : Yellow SB : Sky blue
BR : Brown O : Orange GR : Gray R : Red P : Pink V : Violet

H4J11E01CA

NOTES

CENTRAL DOOR LOCKING SYSTEM <LHD WITHOUT KEYLESS ENTRY>

M1901004701080

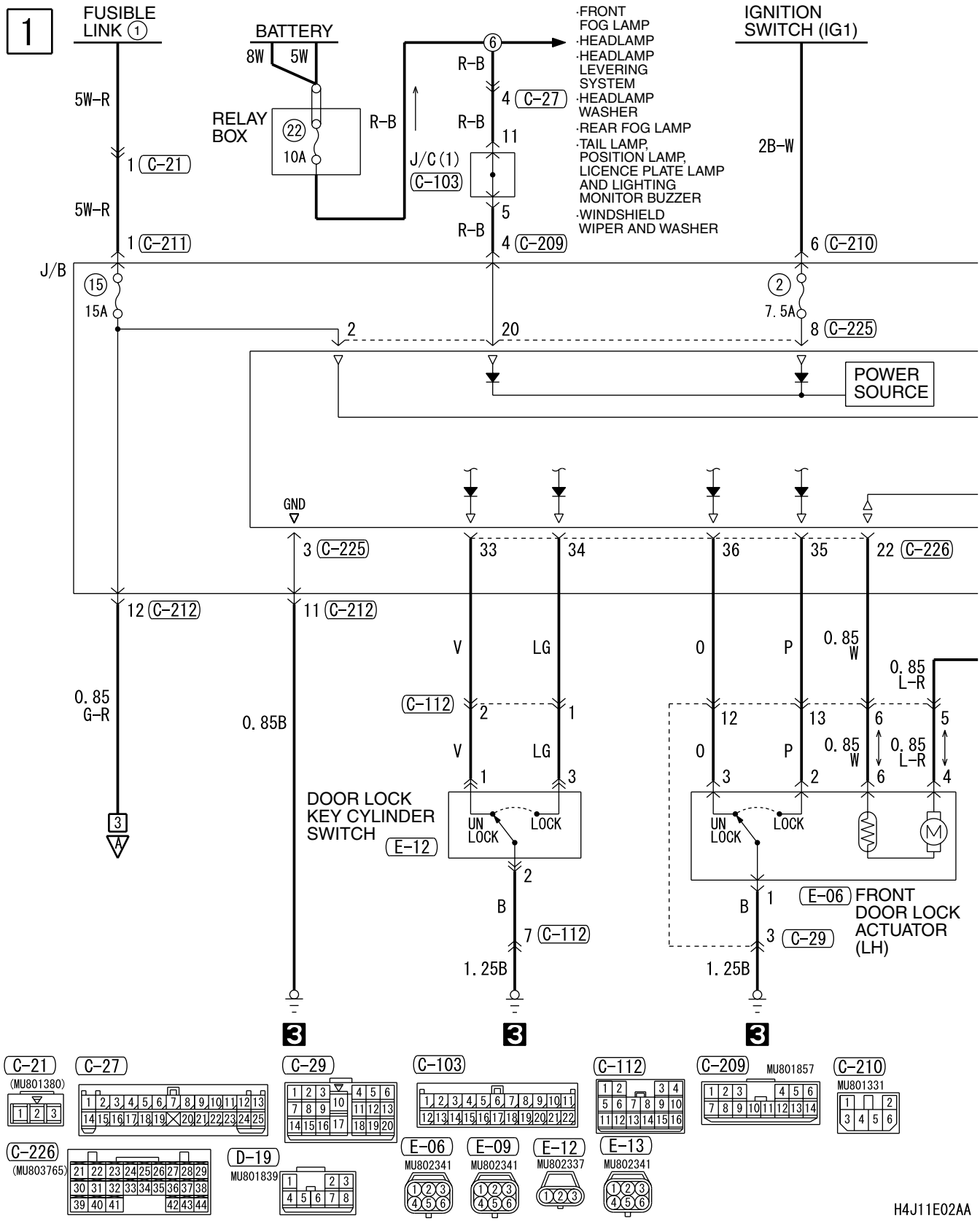

2

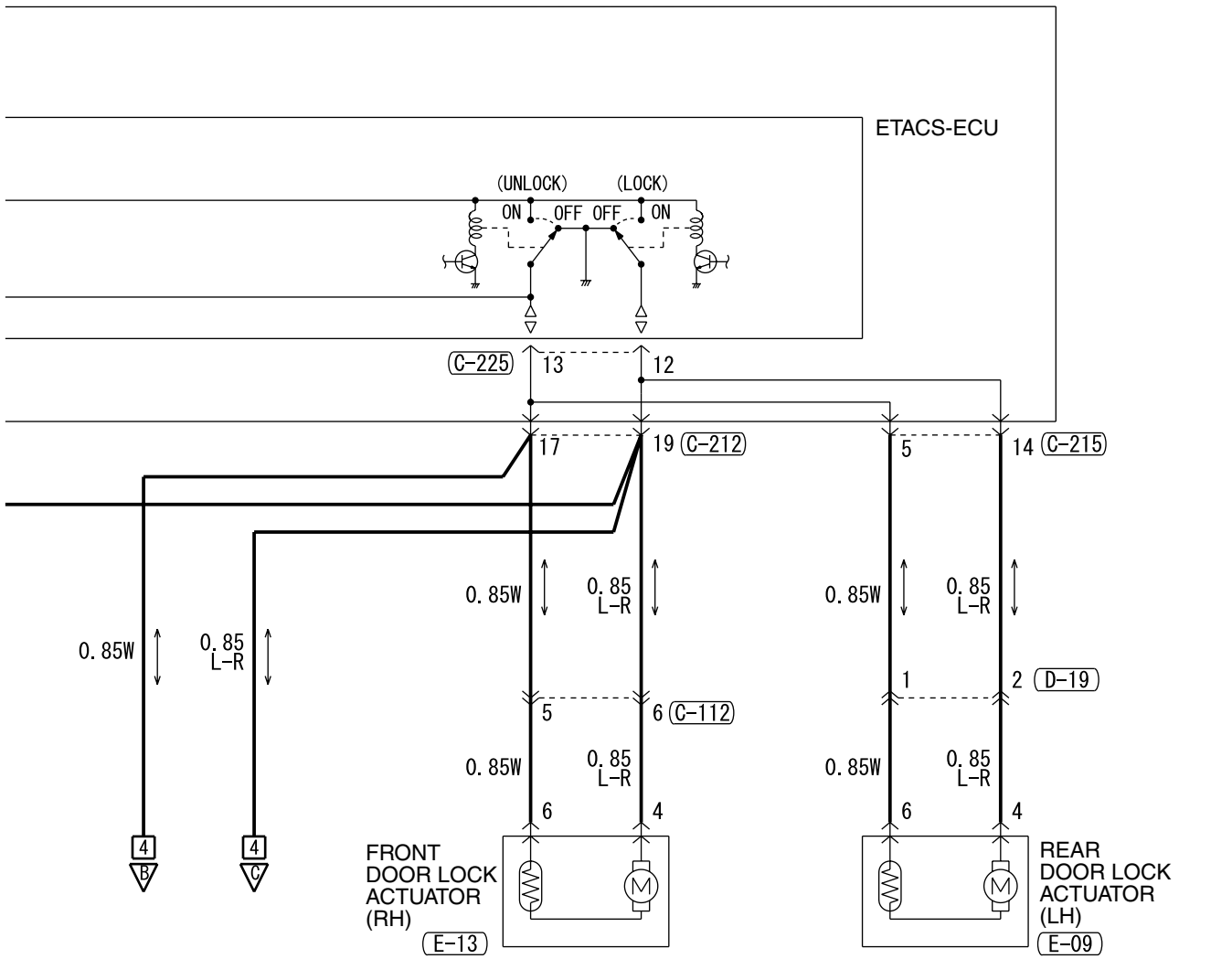

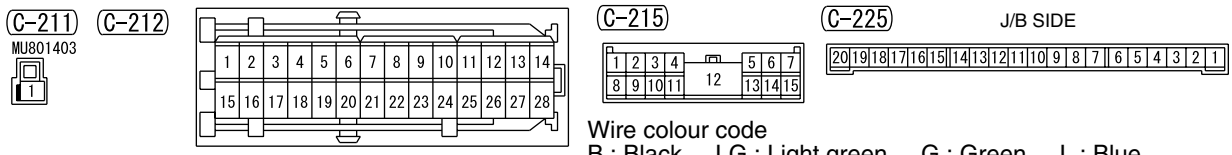

Wire colour code
B : Black LG : Light green G : Green L : Blue
W : White Y : Yellow SB : Sky blue BR : Brown
O : Orange GR : Gray R : Red P : Pink V : Violet

H4J11E02AB

CENTRAL DOOR LOCKING SYSTEM <LHD WITHOUT KEYLESS ENTRY> (CONTINUED)

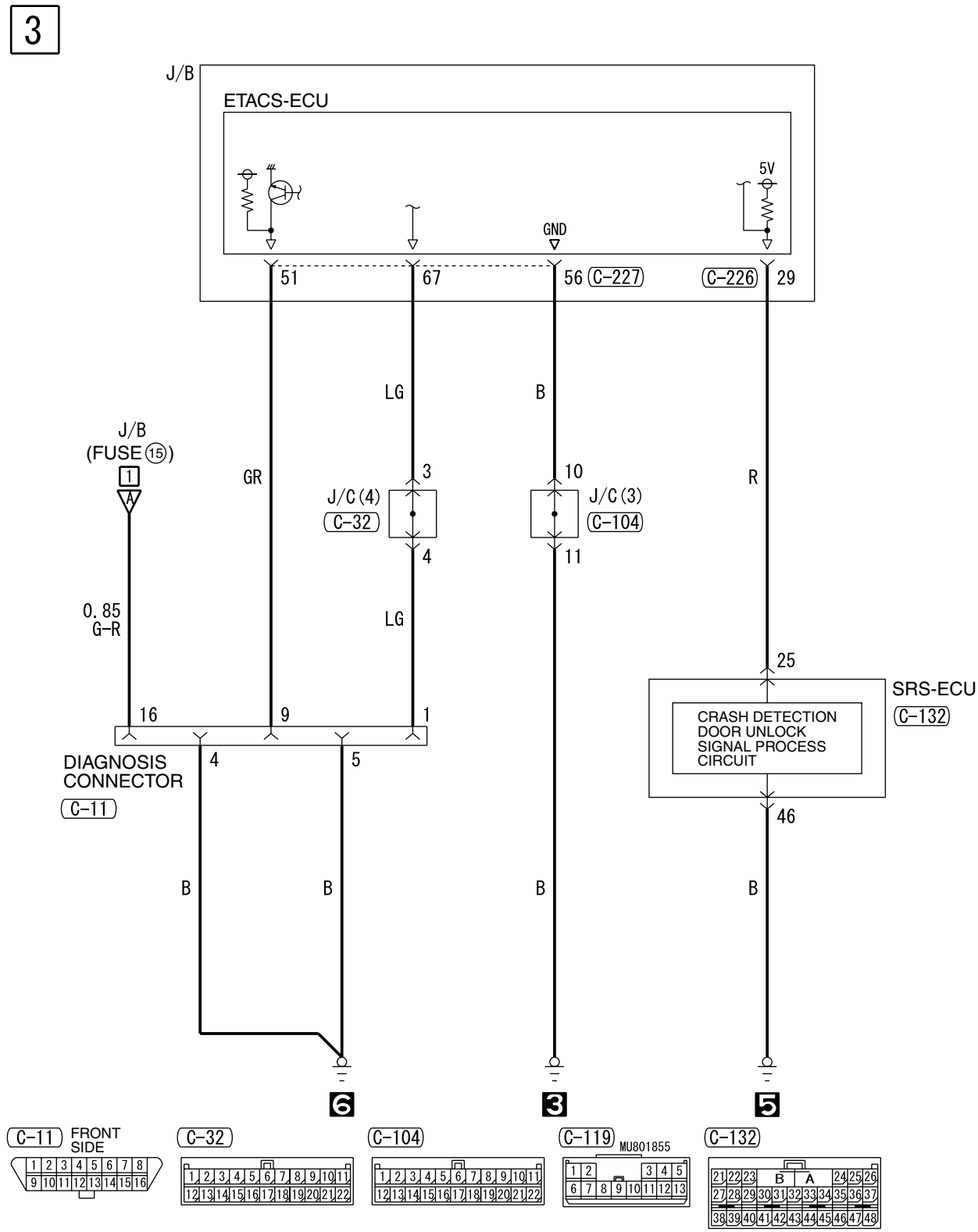

H4J11E02BA

4

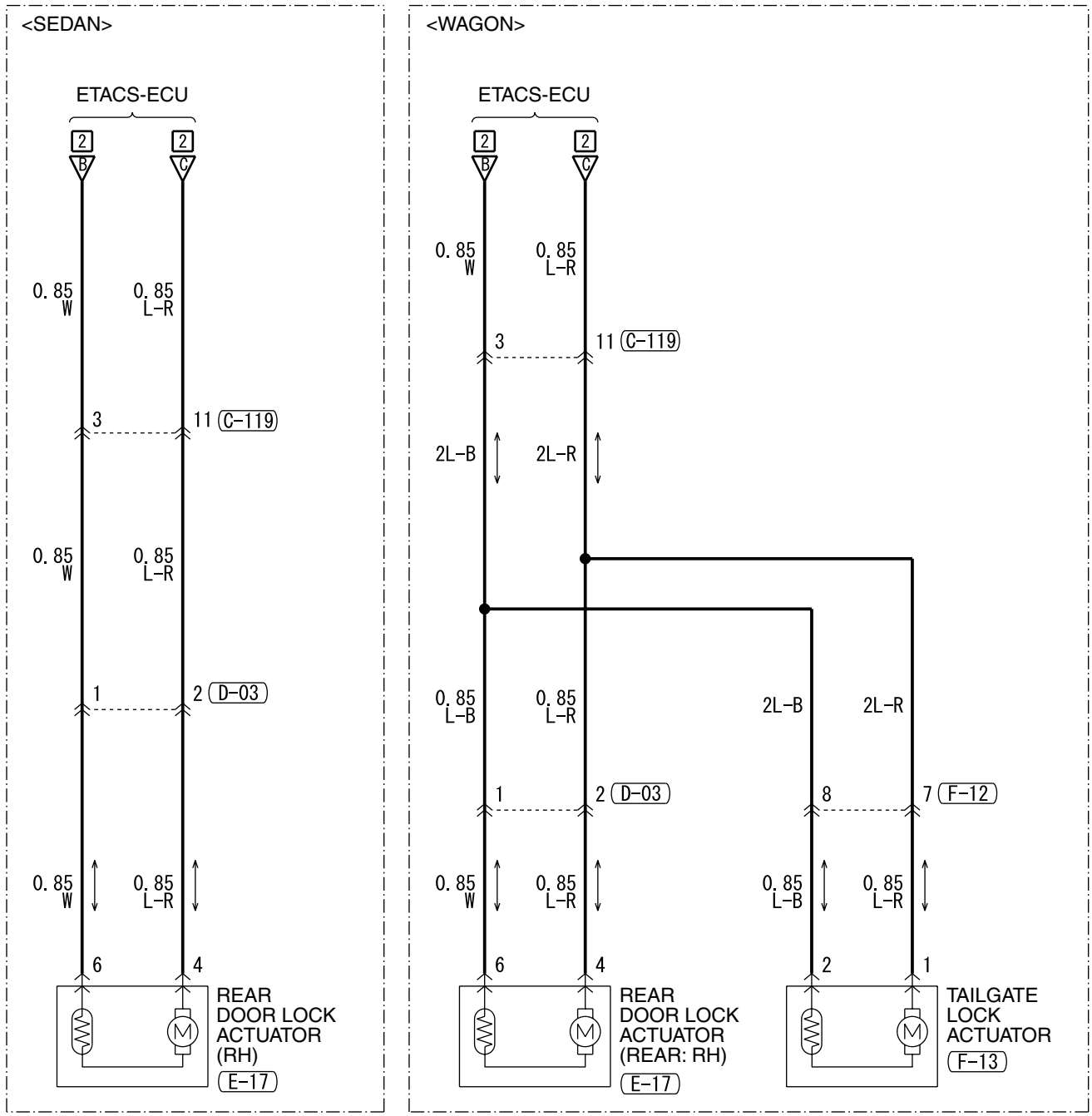

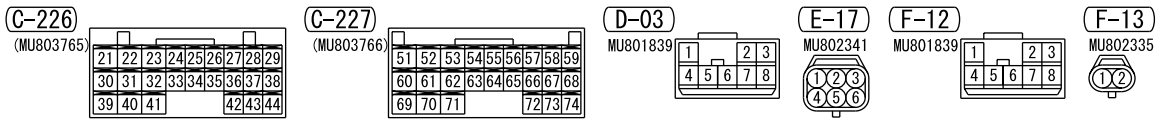

Wire colour code
B : Black LG : Light green G : Green L : Blue W : White Y : Yellow SB : Sky blue
BR : Brown O : Orange GR : Gray R : Red P : Pink V : Violet

H4J11E02BB

CENTRAL DOOR LOCKING SYSTEM <RHD WITHOUT KEYLESS ENTRY>

M1901004701091

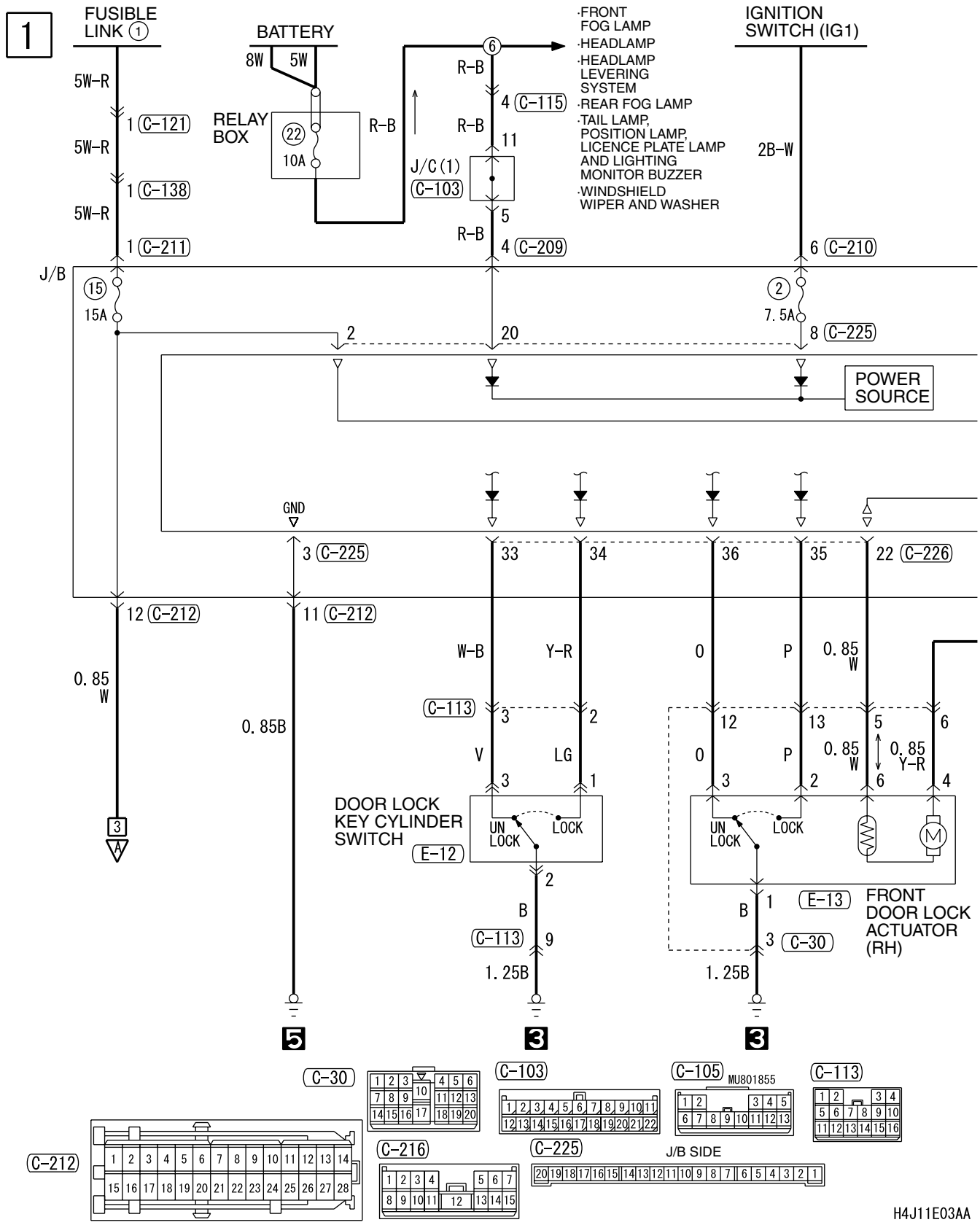

2

NOTE
*1 : SEDAN
*2 : WAGON

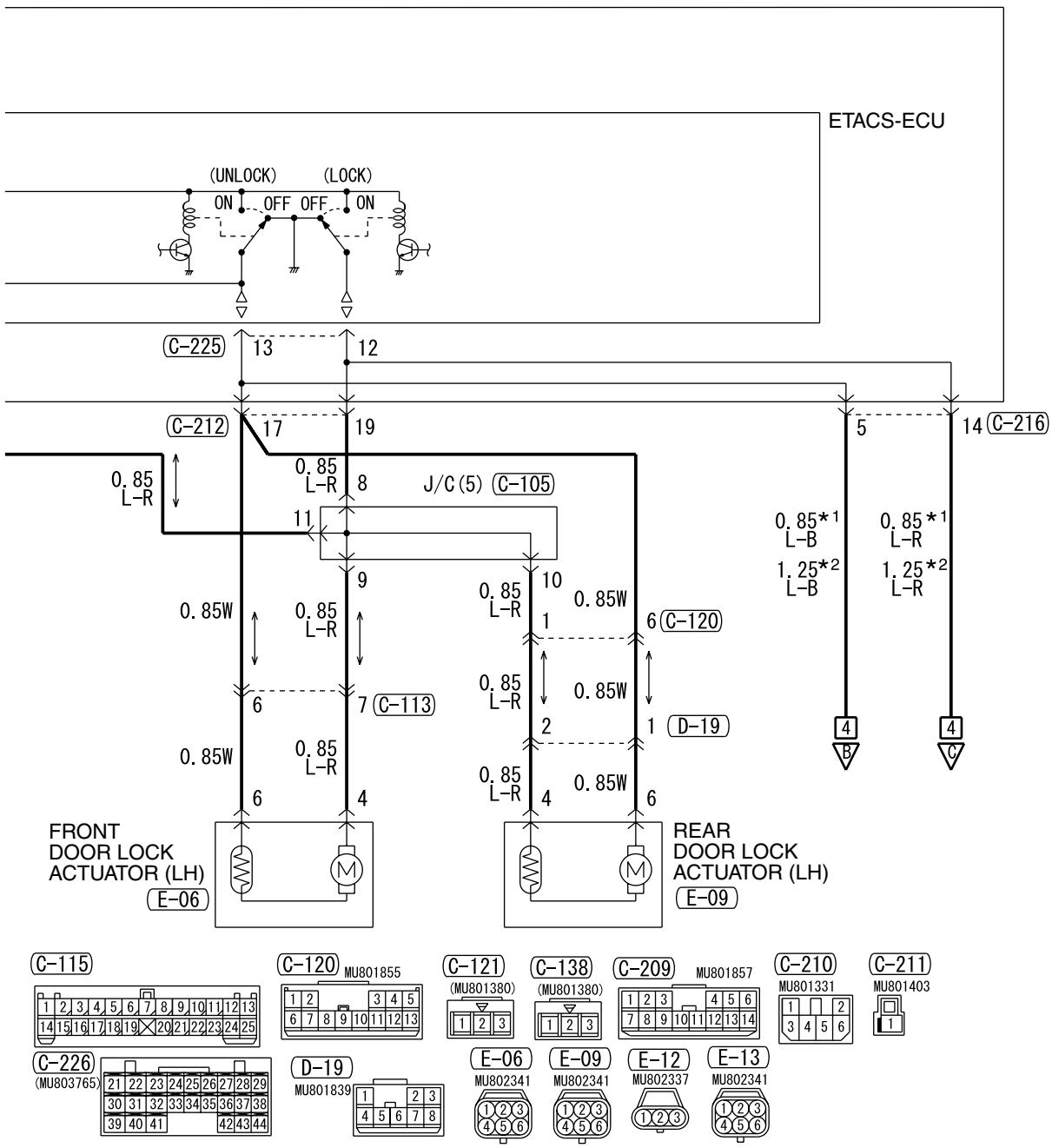

H4J11E03AB

CENTRAL DOOR LOCKING SYSTEM <RHD WITHOUT KEYLESS ENTRY> (CONTINUED)

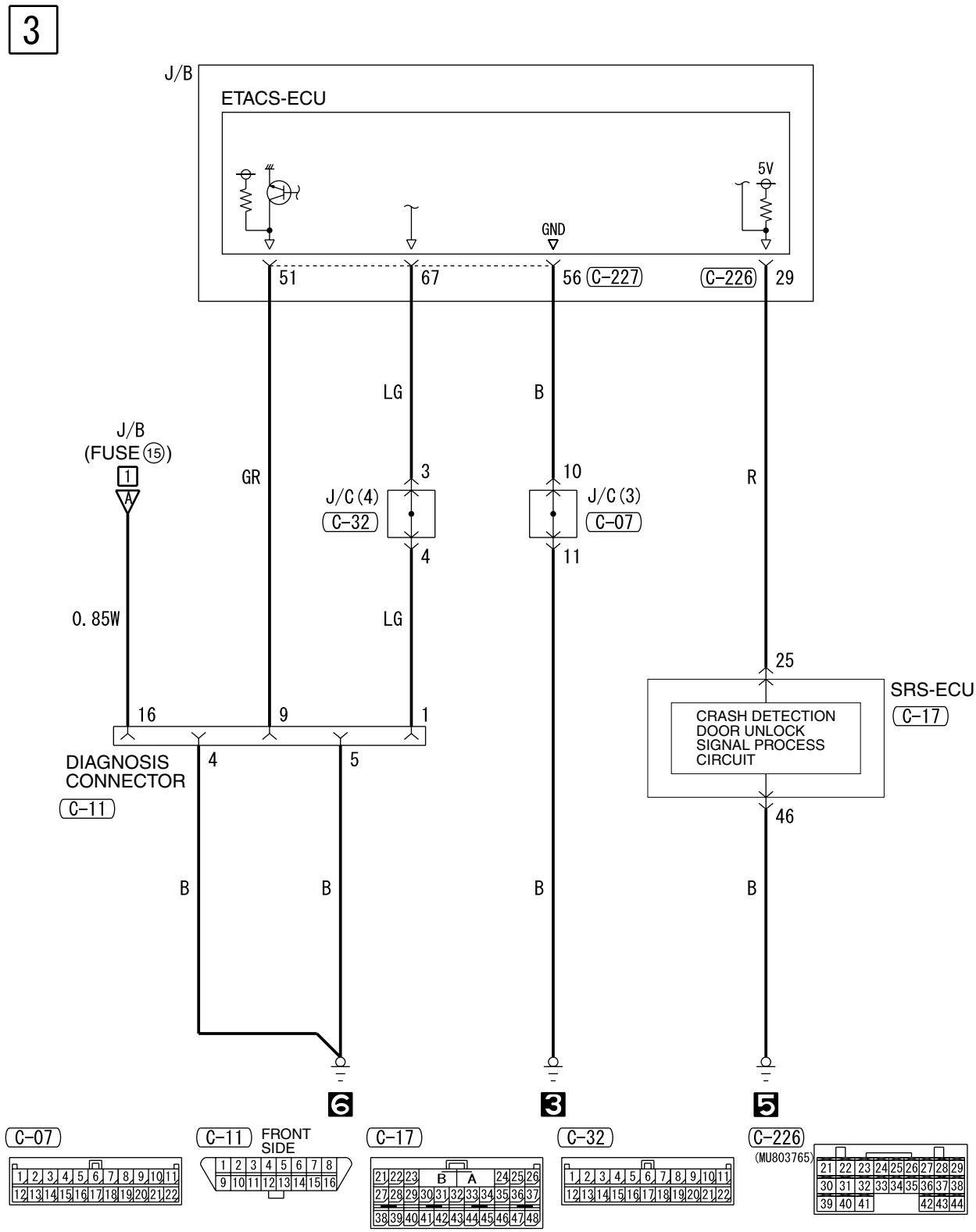

H4J11E03BA

4

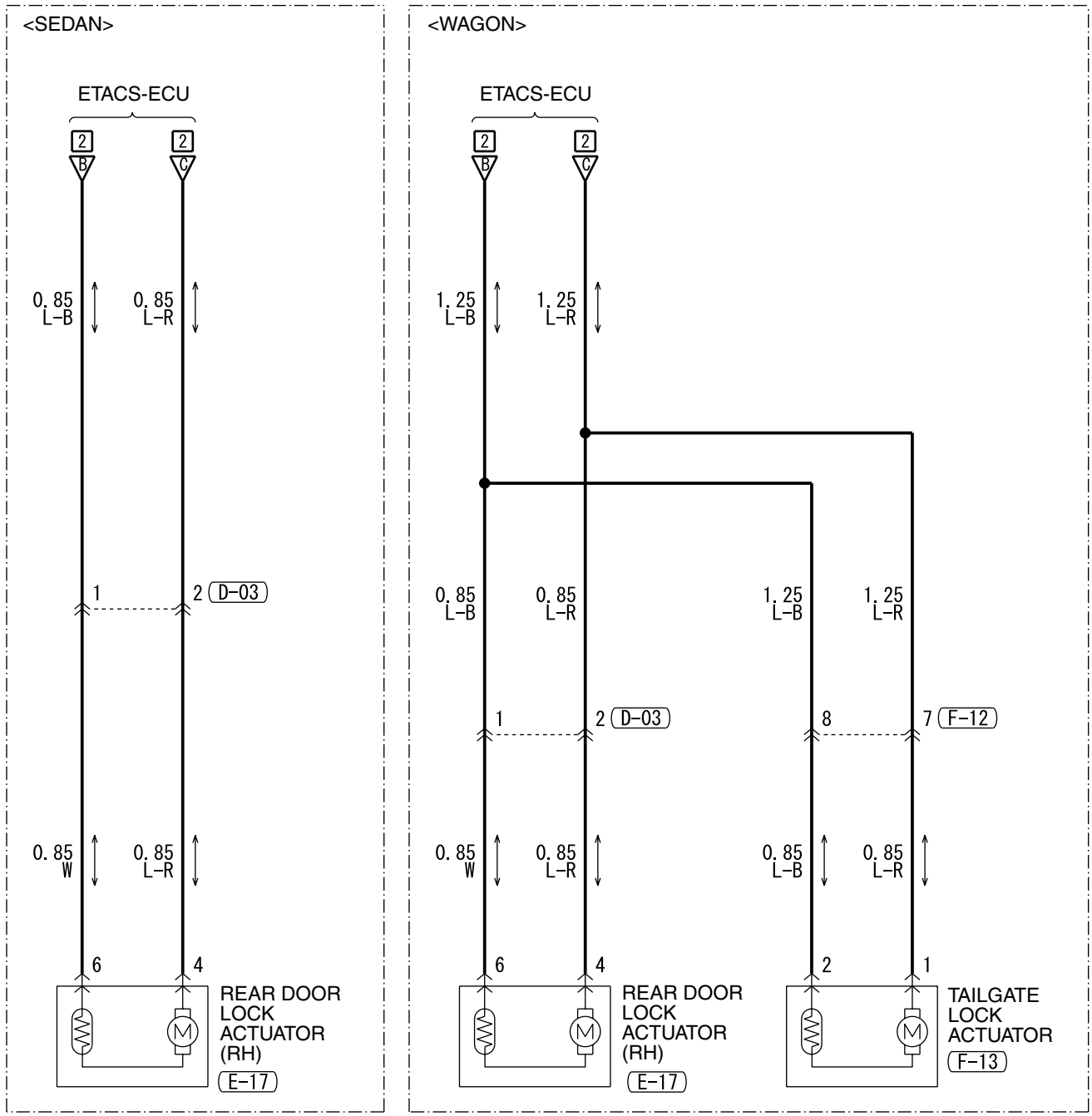

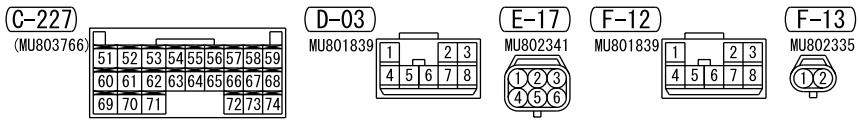

Wire colour code
B : Black LG : Light green G : Green L : Blue W : White Y : Yellow SB : Sky blue
BR : Brown O : Orange GR : Gray R : Red P : Pink V : Violet

H4J11E03BB

CENTRAL DOOR LOCKING SYSTEM <SEDAN LHD WITH KEYLESS ENTRY>

M1901004701109

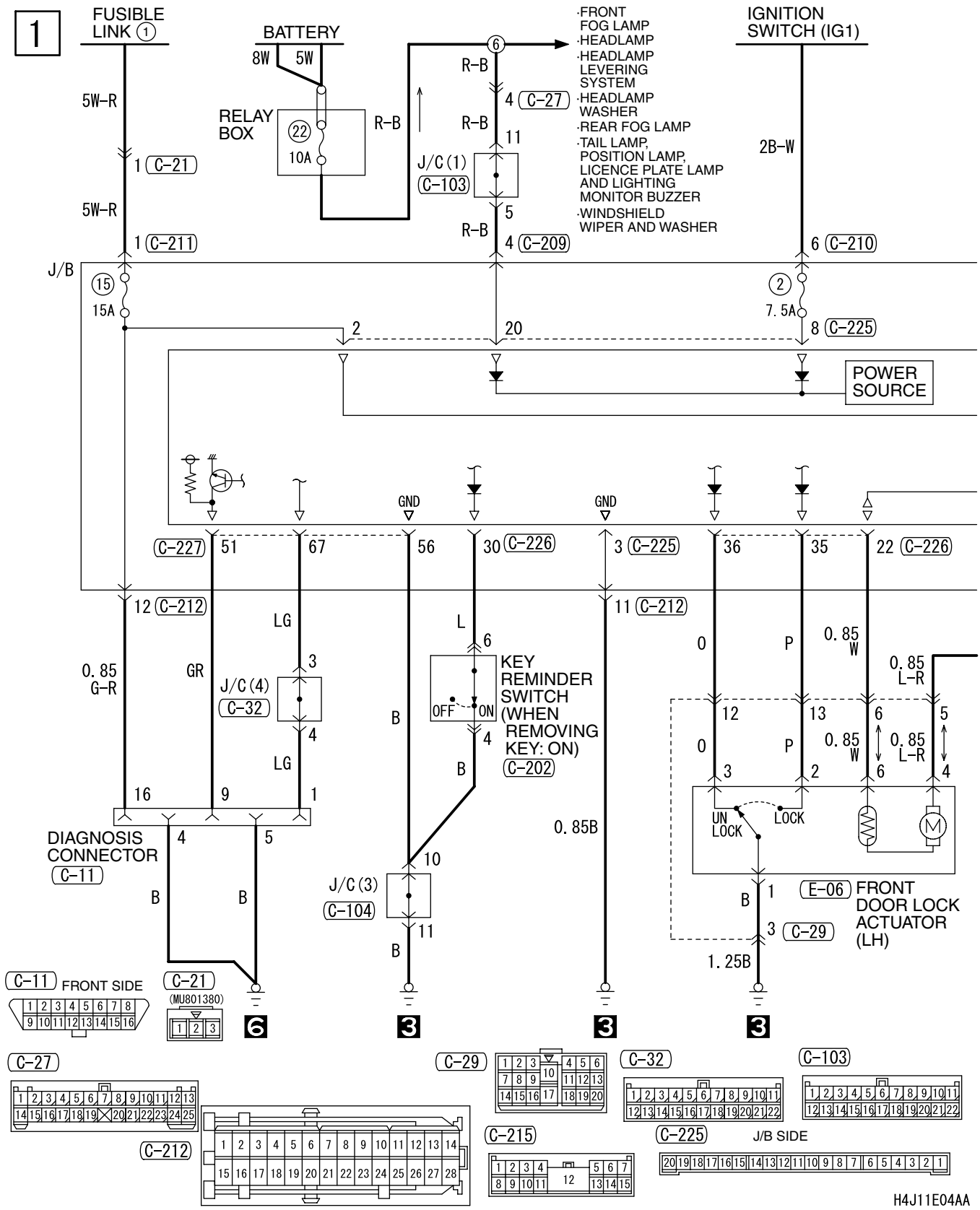

2

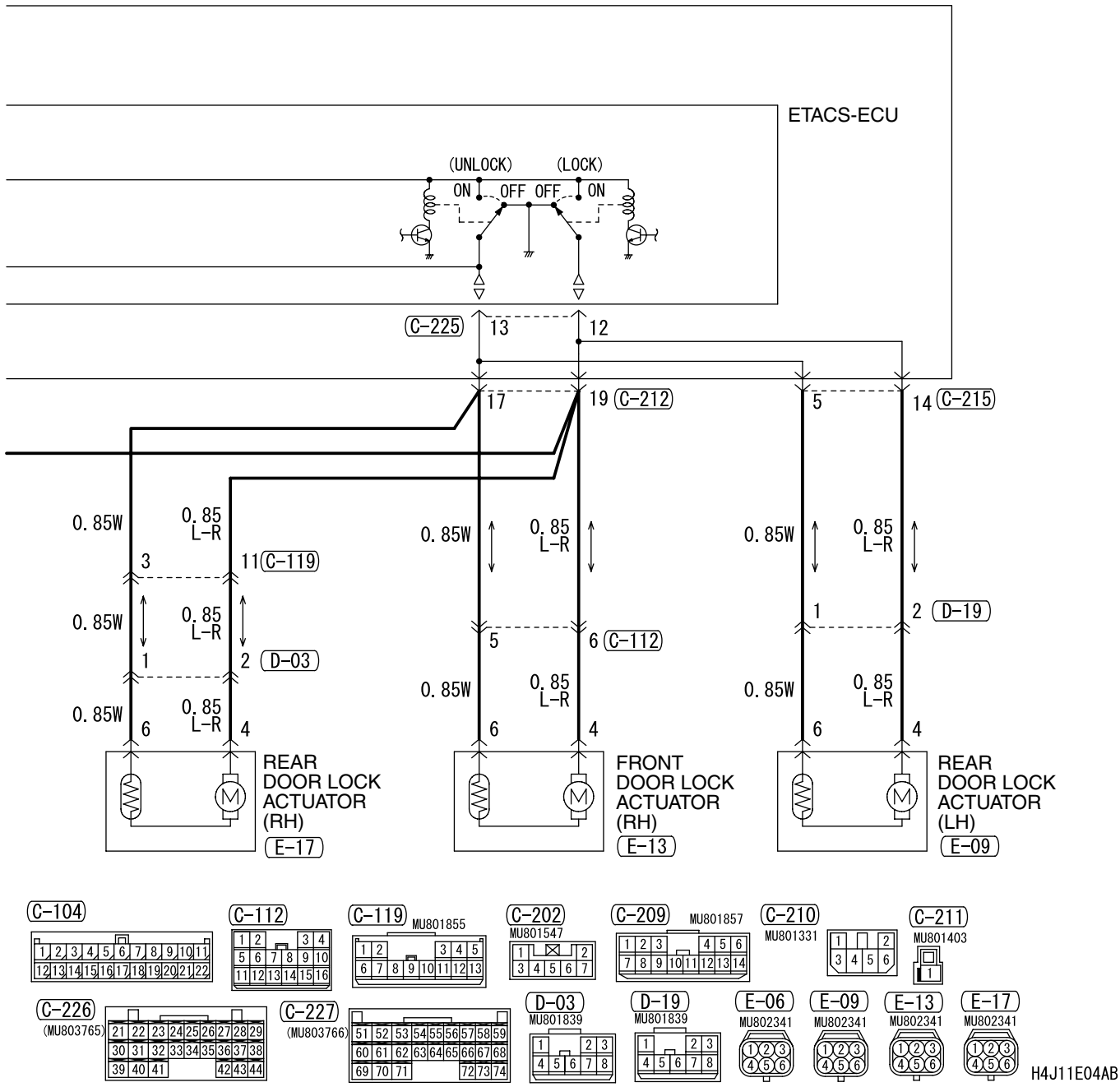
ETACS-ECU
(UNLOCK)
(LOCK)
ON
OFF
OFF
ON
C-225
13
12
17
19
C-212
5
14
C-215
0.85W
0.85 L-R
3
11
C-119
1
2
D-03
6
4
REAR DOOR LOCK ACTUATOR (RH)
E-17
5
6
C-112
FRONT DOOR LOCK ACTUATOR (RH)
E-13
D-19
REAR DOOR LOCK ACTUATOR (LH)
E-09
C-104
C-112
C-119
MU801855
C-202
MU801547
C-209
MU801857
C-210
MU801331
C-211
MU801403
C-226
(MU803765)
C-227
(MU803766)
D-03
MU801839
D-19
MU801839
E-06
MU802341
E-09
MU802341
E-13
MU802341
E-17
MU802341
H4J11E04AB

CENTRAL DOOR LOCKING SYSTEM <SEDAN LHD WITH KEYLESS ENTRY> (CONTINUED)

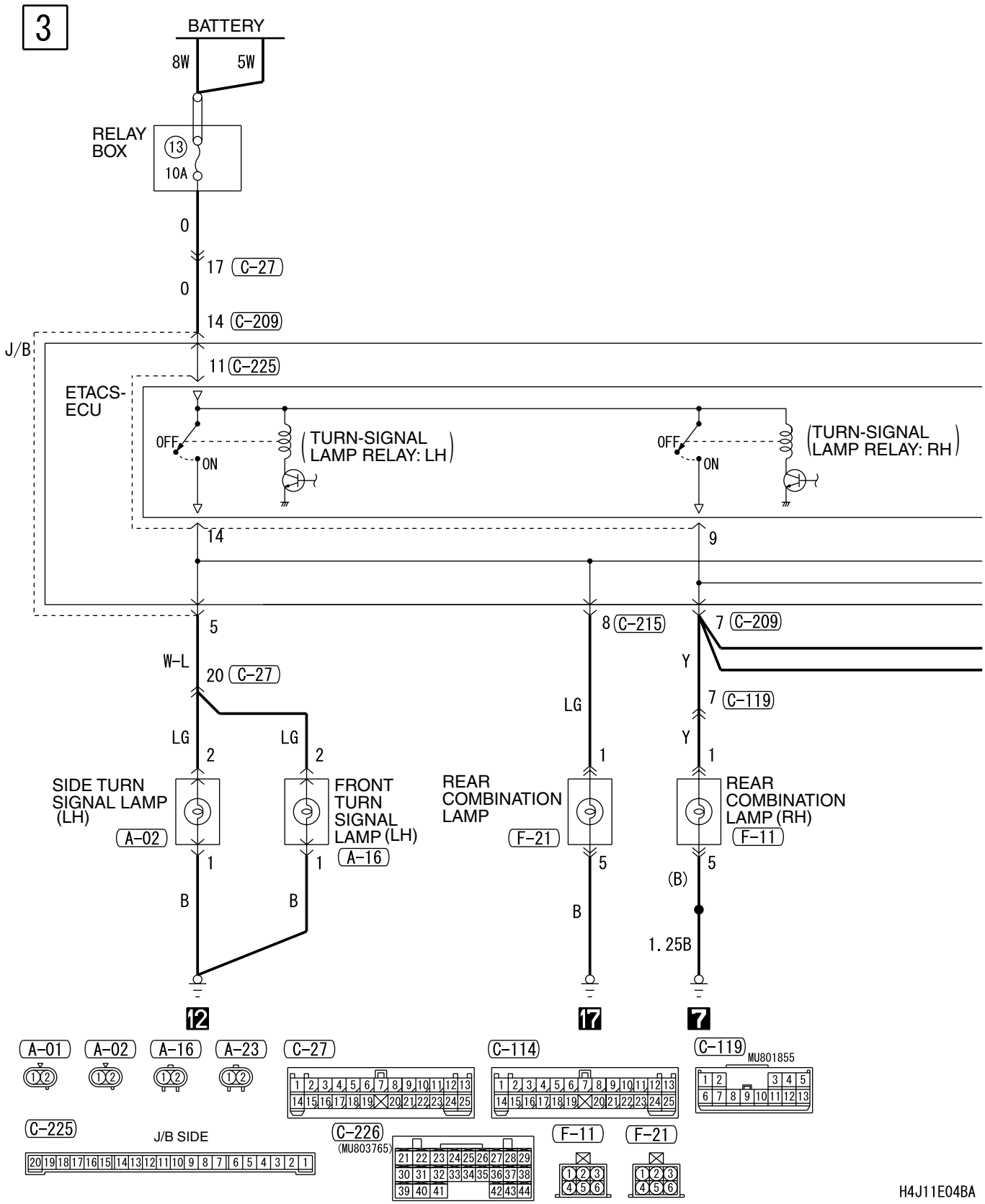

4

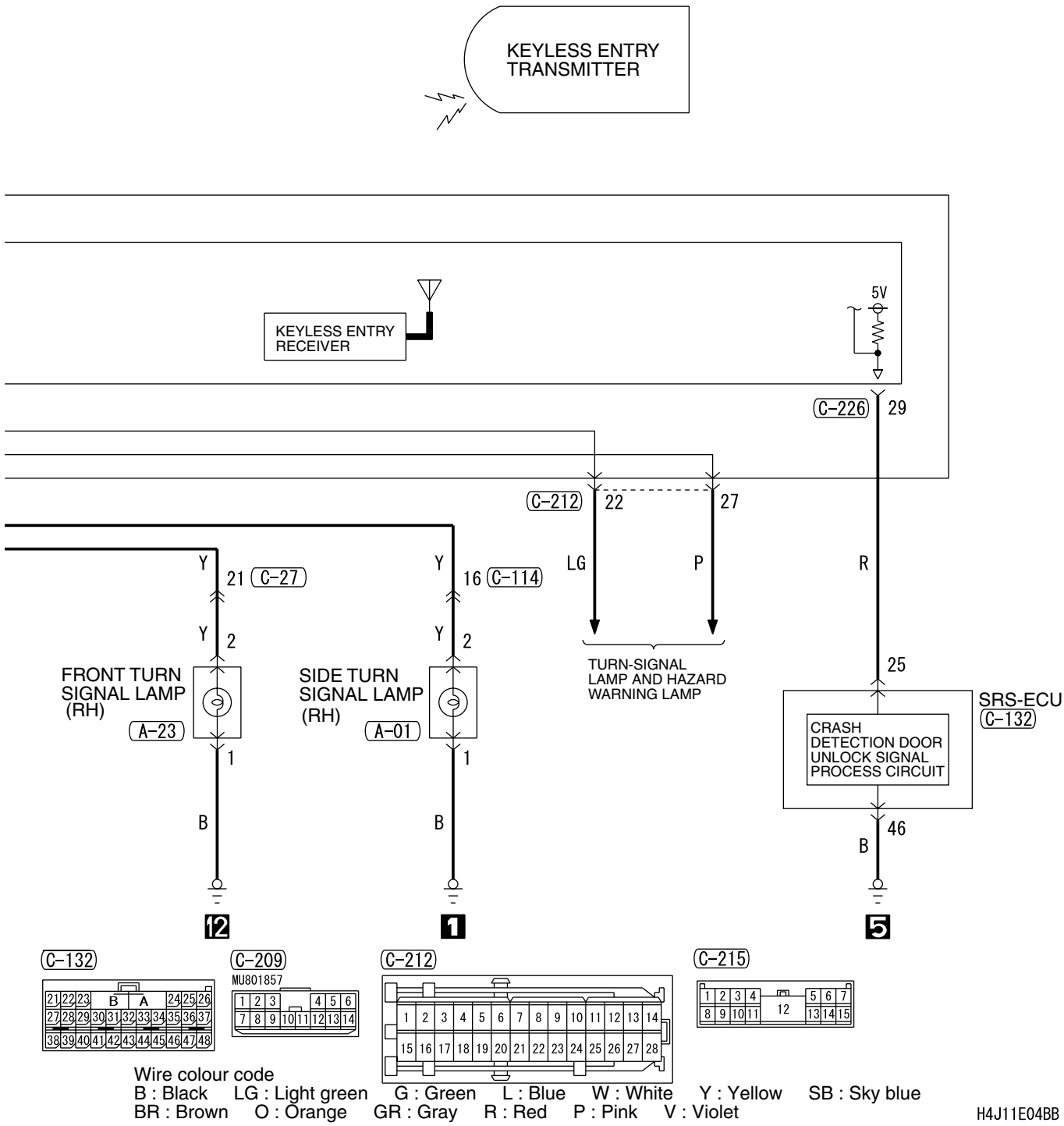
KEYLESS ENTRY TRANSMITTER
KEYLESS ENTRY RECEIVER
5V
C-226
29
C-212
22
27
LG
P
R
Y
21
C-27
Y
16
C-114
Y
2
Y
2
FRONT TURN SIGNAL LAMP (RH)
A-23
SIDE TURN SIGNAL LAMP (RH)
A-01
TURN-SIGNAL LAMP AND HAZARD WARNING LAMP
25
SRS-ECU
C-132
CRASH DETECTION DOOR UNLOCK SIGNAL PROCESS CIRCUIT
1
1
B
B
46
B
12
1
5
C-132
C-209
MU801857
C-212
C-215
Wire colour code
B : Black LG : Light green G : Green L : Blue W : White Y : Yellow SB : Sky blue
BR : Brown O : Orange GR : Gray R : Red P : Pink V : Violet
H4J11E04BB

CENTRAL DOOR LOCKING SYSTEM <SEDAN LHD WITH KEYLESS ENTRY> (CONTINUED)

5

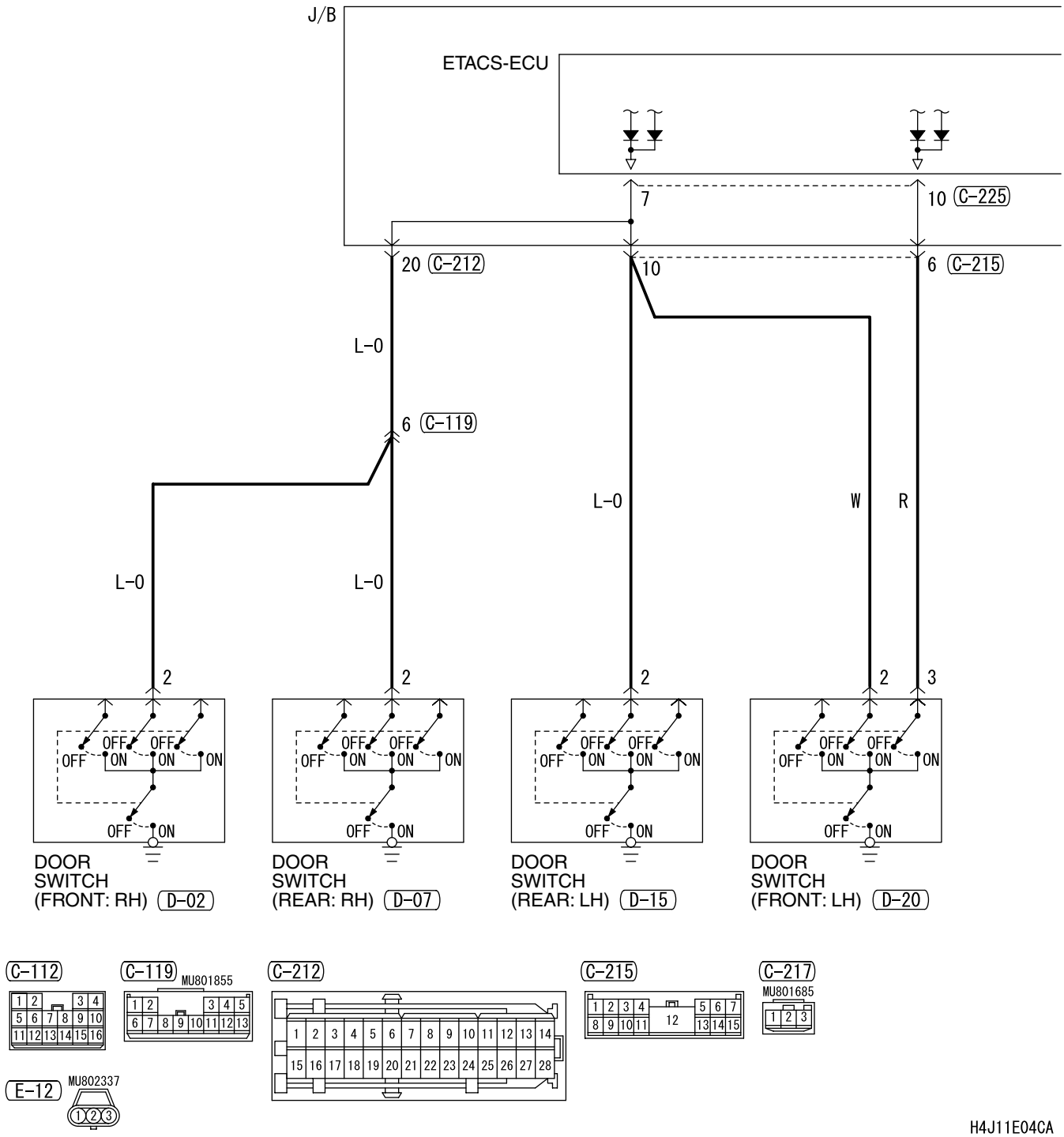

6

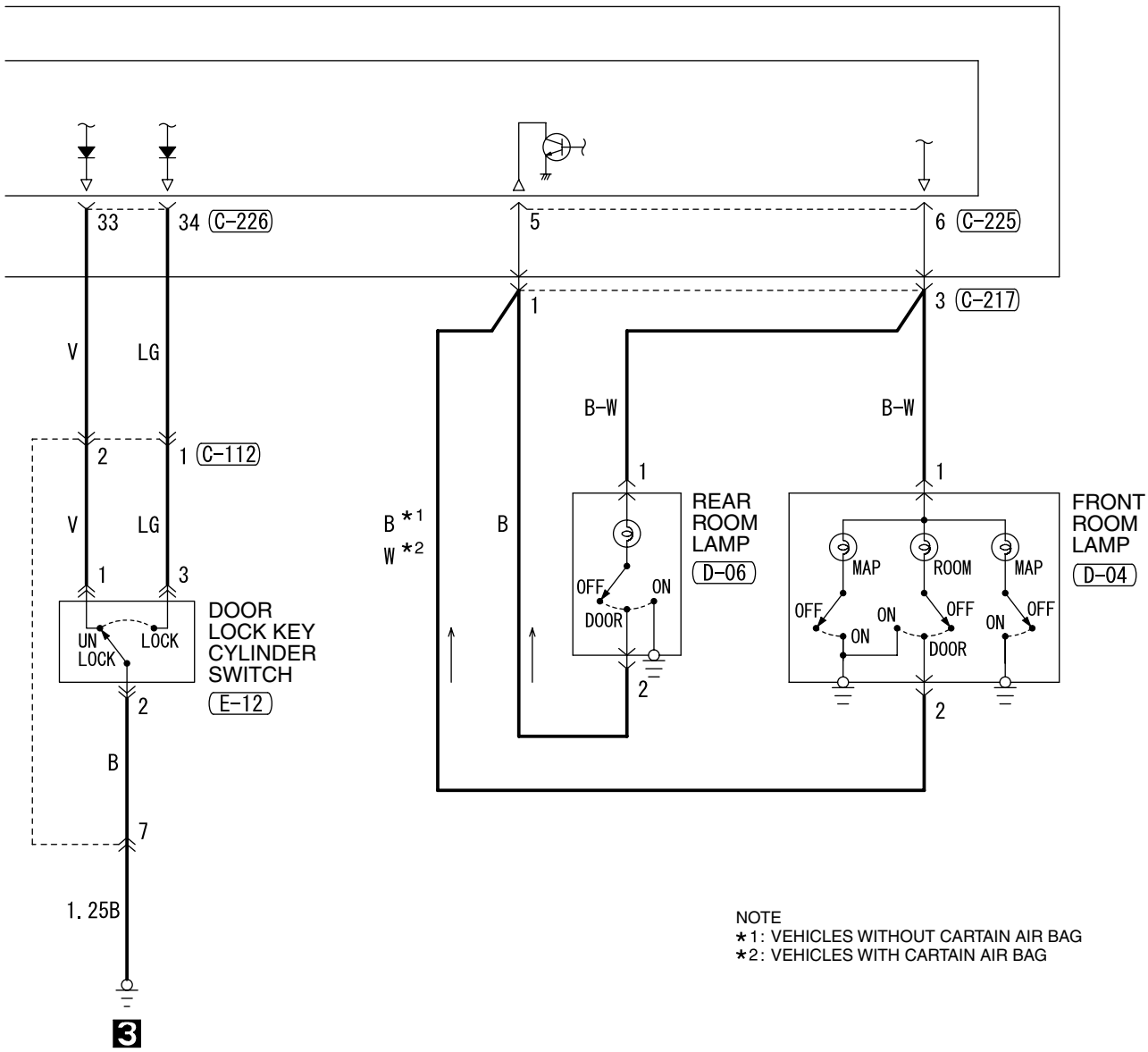

NOTE
*1: VEHICLES WITHOUT CARTAIN AIR BAG
*2: VEHICLES WITH CARTAIN AIR BAG

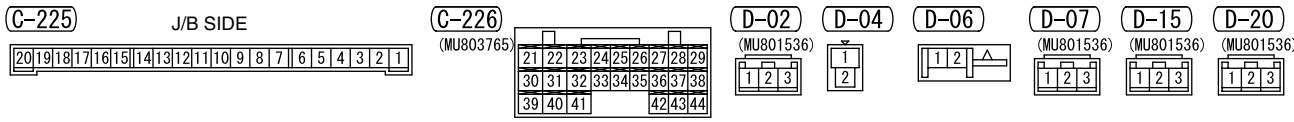

Wire colour code
B : Black LG : Light green G : Green L : Blue W : White Y : Yellow SB : Sky blue
BR : Brown O : Orange GR : Gray R : Red P : Pink V : Violet

H4J11E04CB

CENTRAL DOOR LOCKING SYSTEM <SEDAN RHD WITH KEYLESS ENTRY>

M1901004701110

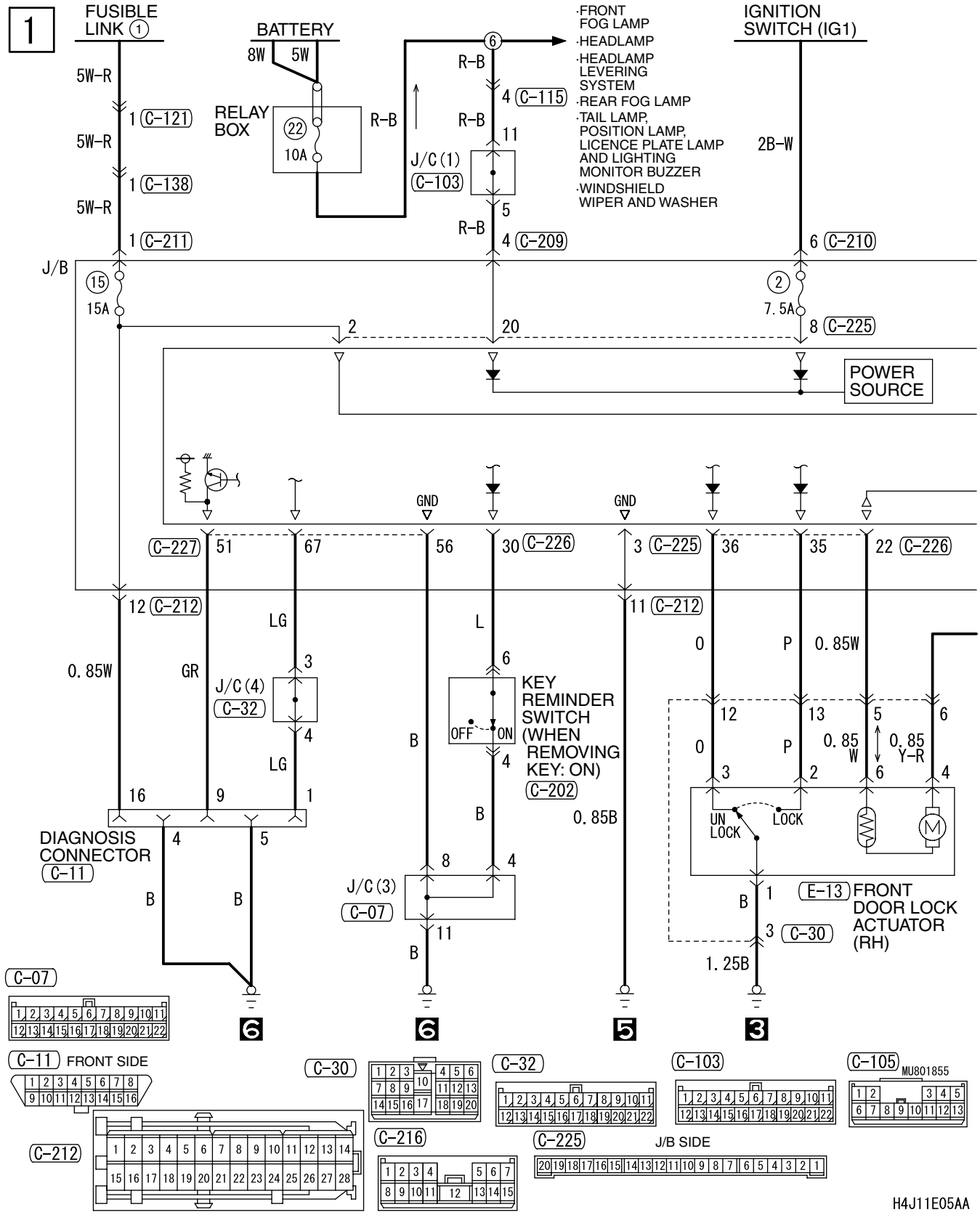

2

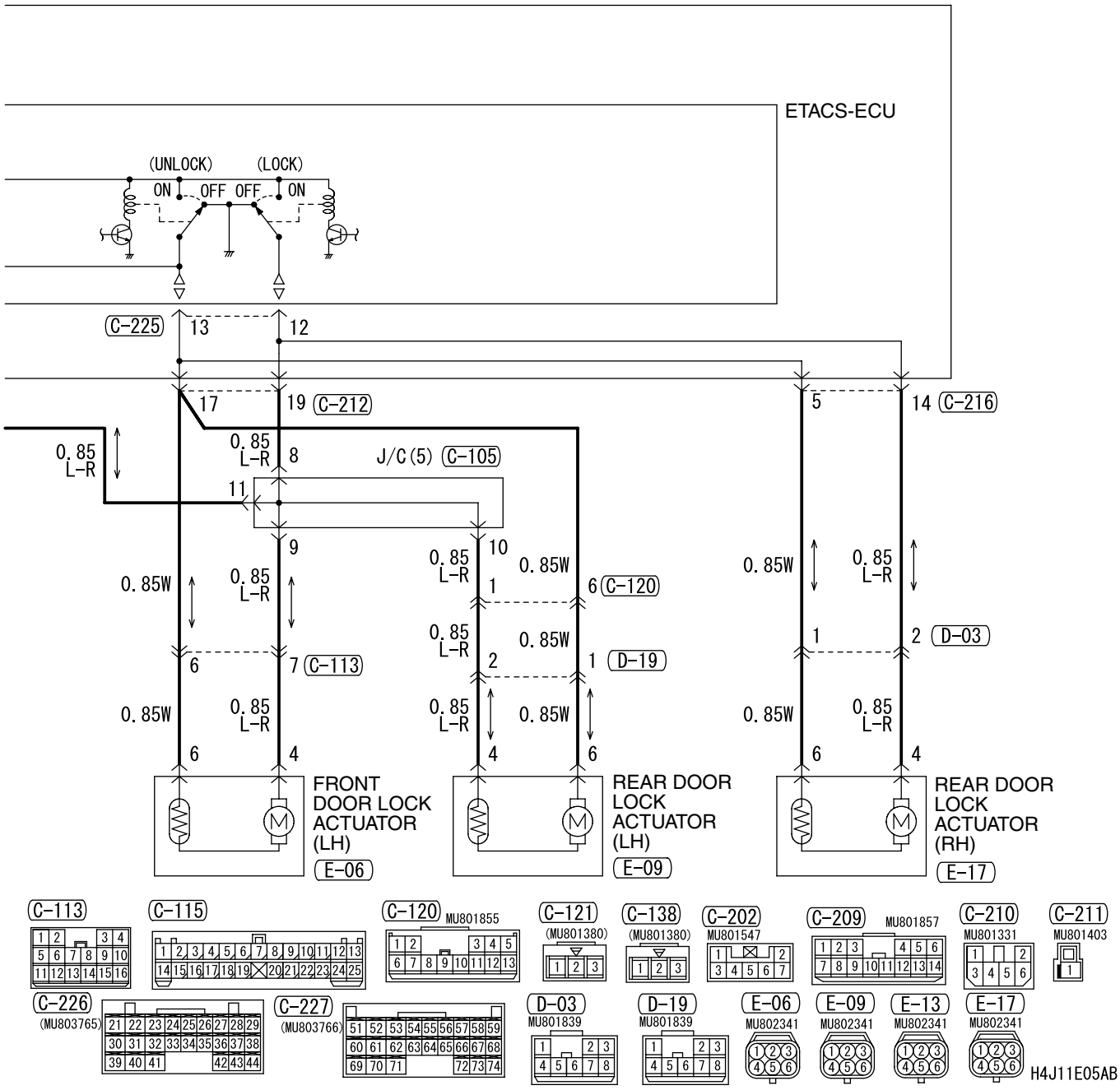
ETACS-ECU
(UNLOCK)
(LOCK)
ON
OFF
OFF
ON
C-225
13
12
17
19
C-212
5
14
C-216
0.85
L-R
8
J/C(5)
C-105
11
9
10
0.85W
6
C-120
7
C-113
1
2
D-03
D-19
4
FRONT
DOOR LOCK
ACTUATOR
(LH)
E-06
REAR DOOR
LOCK
ACTUATOR
(LH)
E-09
REAR DOOR
LOCK
ACTUATOR
(RH)
E-17
C-113
C-115
C-120
MU801855
C-121
(MU801380)
C-138
(MU801380)
C-202
MU801547
C-209
MU801857
C-210
MU801331
C-211
MU801403
C-226
(MU803765)
C-227
(MU803766)
D-03
MU801839
D-19
MU801839
E-06
MU802341
E-09
MU802341
E-13
MU802341
E-17
MU802341
H4J11E05AB

CENTRAL DOOR LOCKING SYSTEM <SEDAN RHD WITH KEYLESS ENTRY> (CONTINUED)

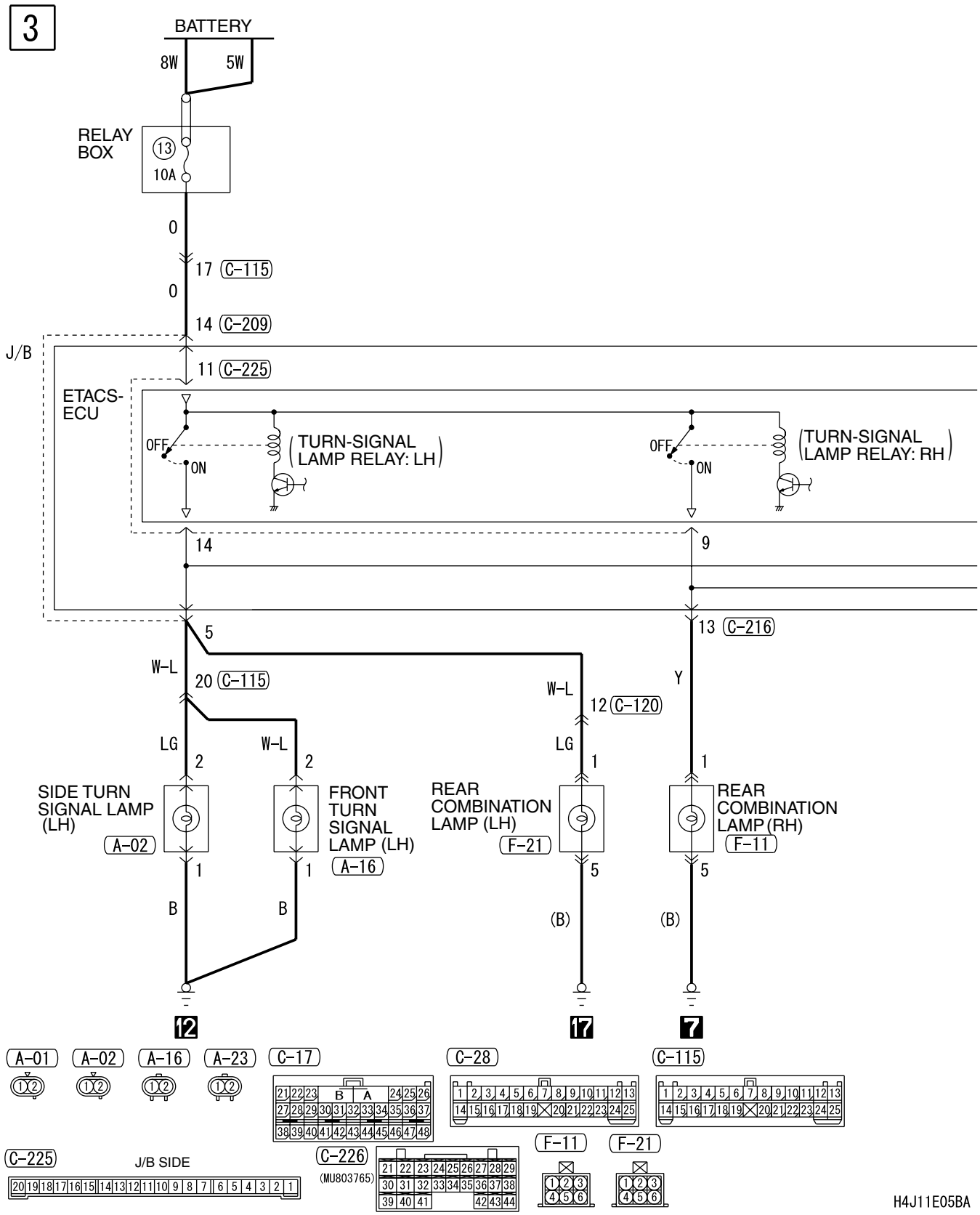

4

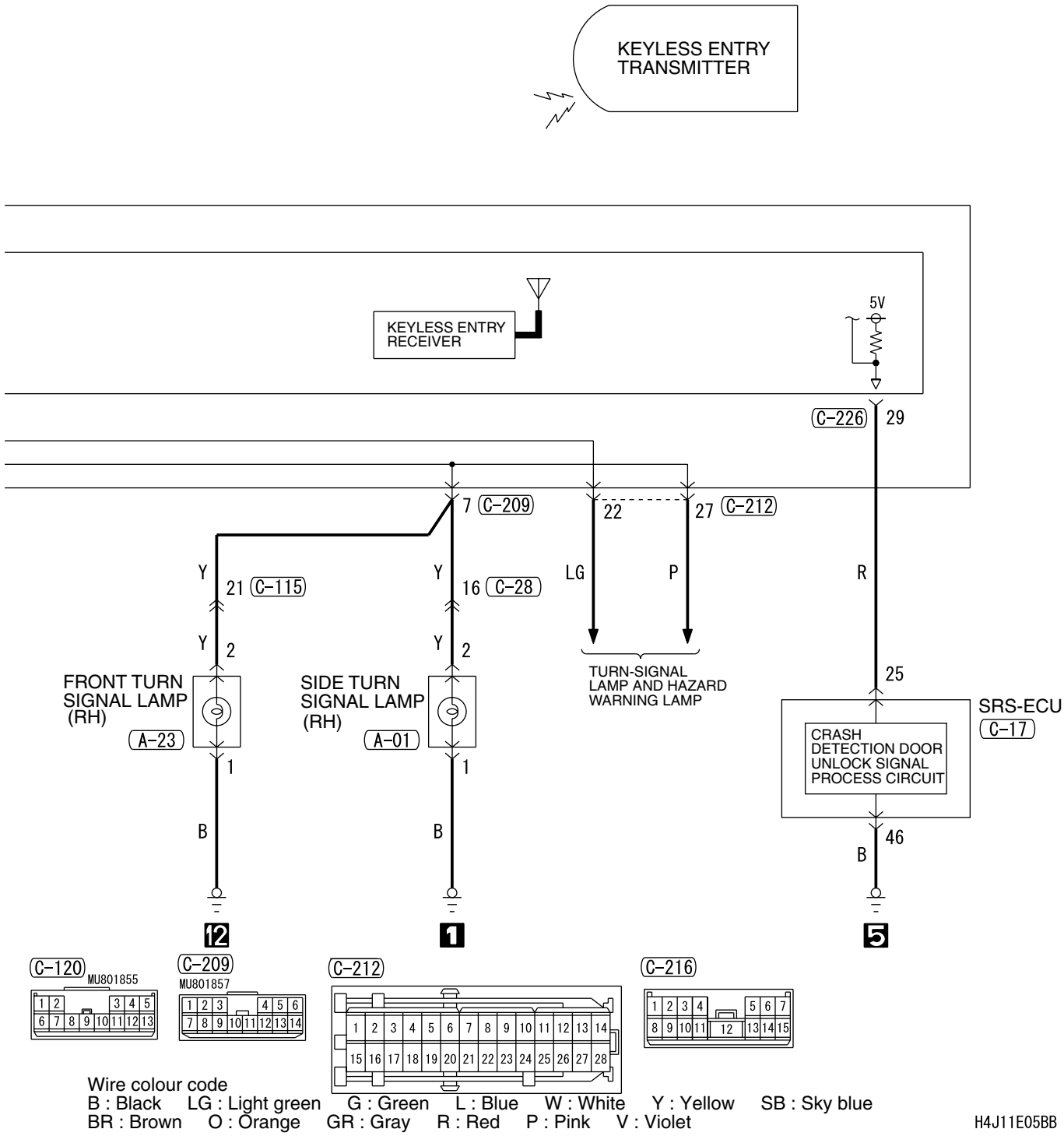

Wire colour code
B : Black LG : Light green G : Green L : Blue W : White Y : Yellow SB : Sky blue
BR : Brown O : Orange GR : Gray R : Red P : Pink V : Violet

H4J11E05BB

CENTRAL DOOR LOCKING SYSTEM <SEDAN RHD WITH KEYLESS ENTRY> (CONTINUED)

5

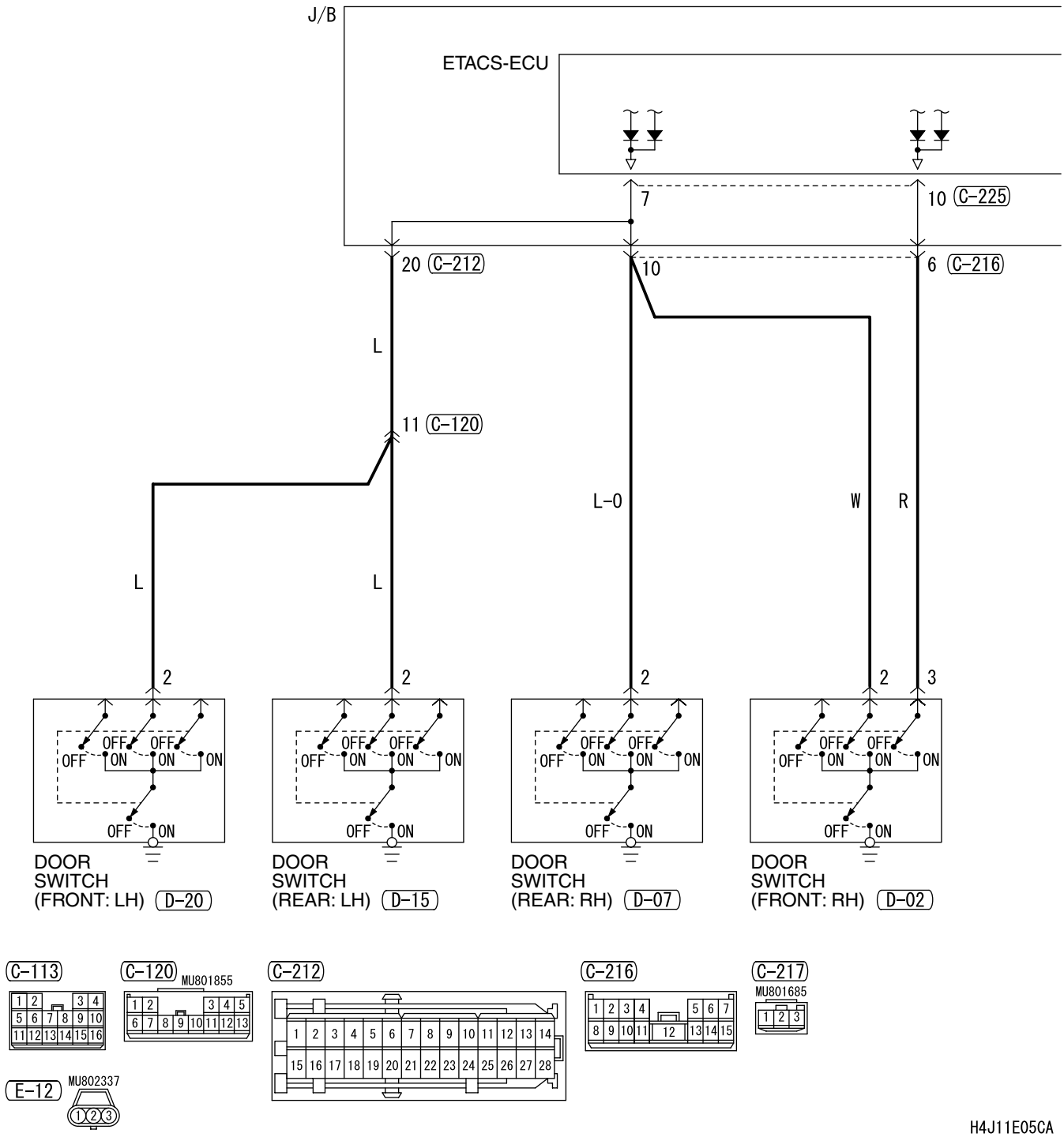

6

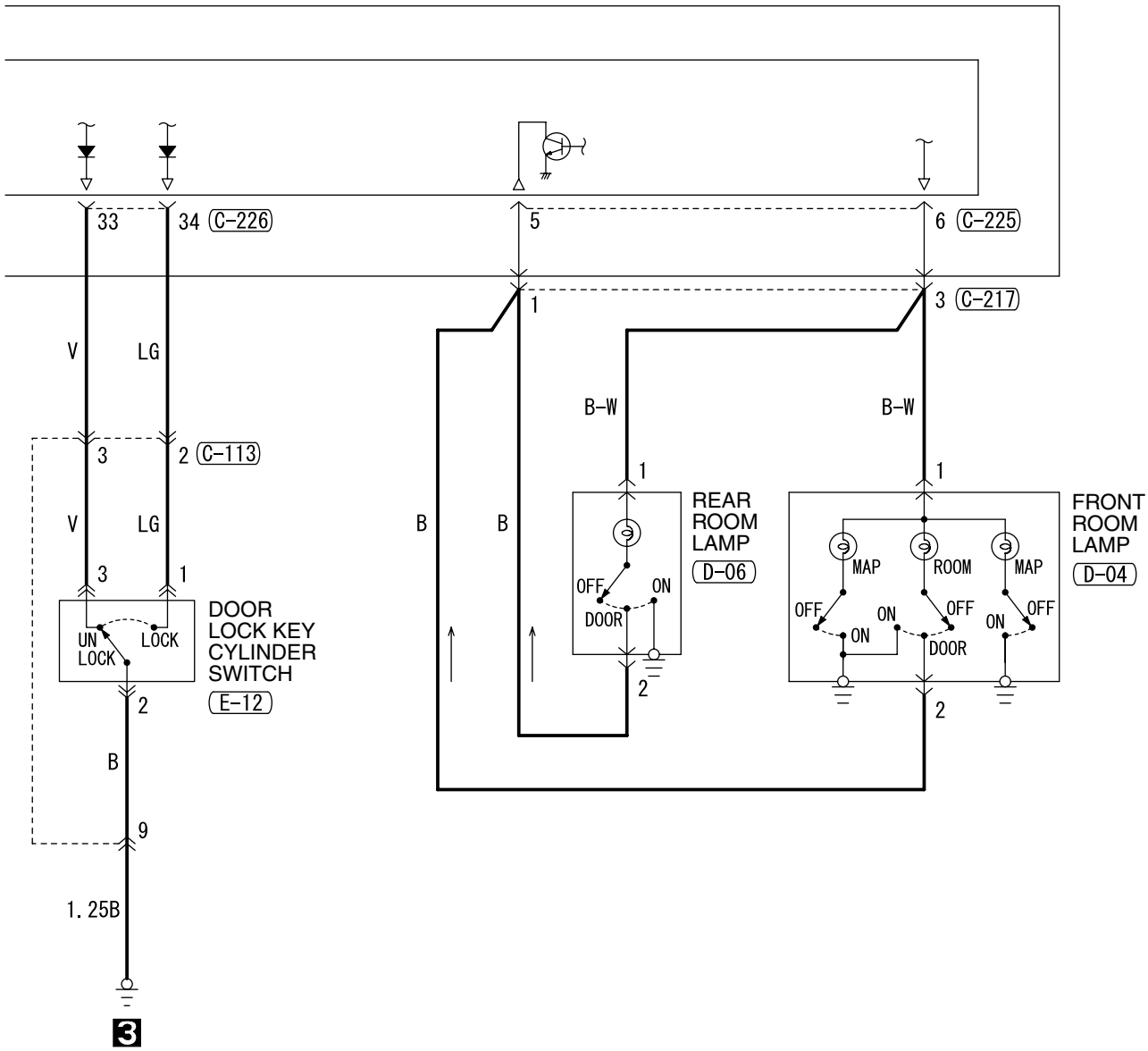

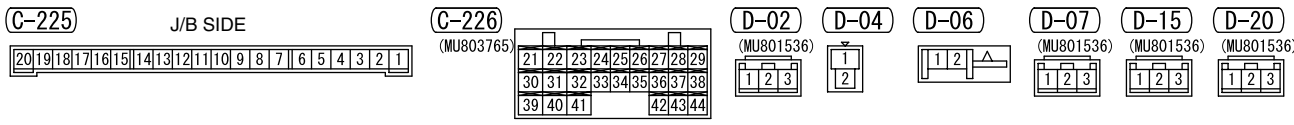

Wire colour code
B : Black LG : Light green G : Green L : Blue W : White Y : Yellow SB : Sky blue
BR : Brown O : Orange GR : Gray R : Red P : Pink V : Violet

H4J11E05CB

CENTRAL DOOR LOCKING SYSTEM <WAGON LHD WITH KEYLESS ENTRY>

M1901004701121

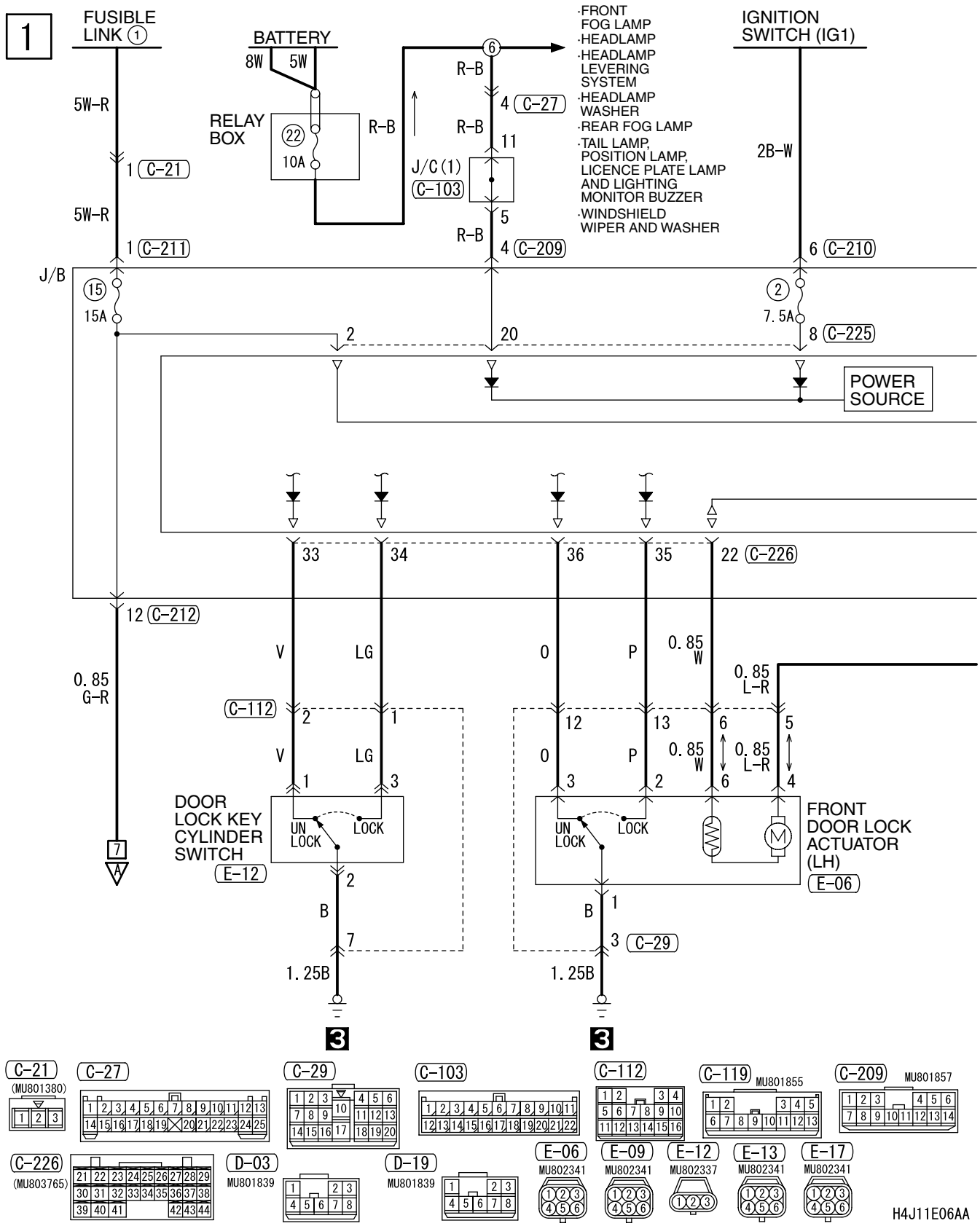

2

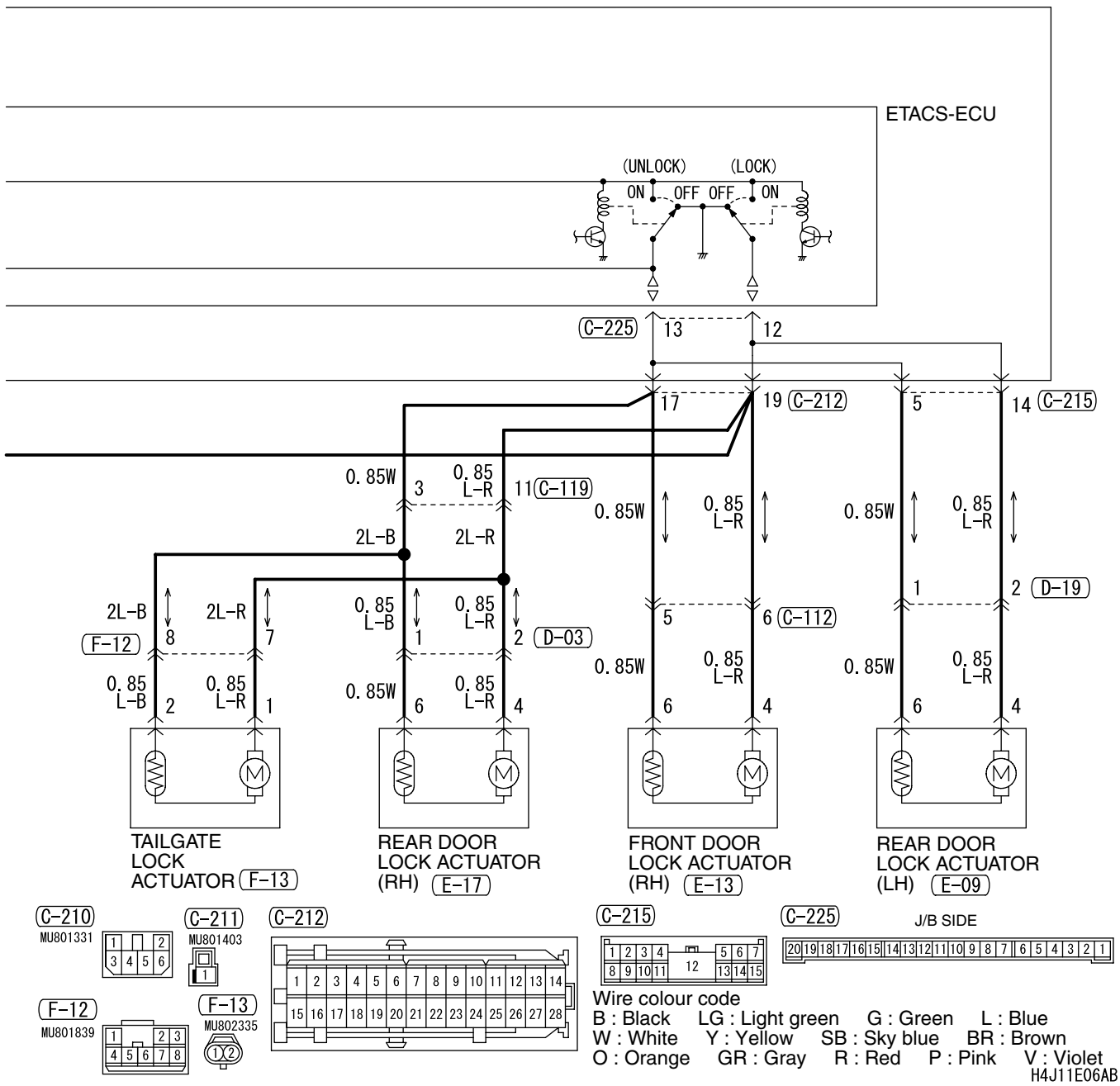
ETACS-ECU
(UNLOCK)
(LOCK)
ON
OFF
OFF
ON
C-225
13
12
17
19 C-212
5
14 C-215
0.85W
3
0.85 L-R
11 C-119
2L-B
2L-R
2L-B
2L-R
F-12
8
7
0.85 L-B
1
2 D-03
0.85 L-B
2
0.85 L-R
1
0.85W
6
0.85 L-R
4
5
6 C-112
6
4
1
2 D-19
6
4
TAILGATE LOCK ACTUATOR F-13
REAR DOOR LOCK ACTUATOR (RH) E-17
FRONT DOOR LOCK ACTUATOR (RH) E-13
REAR DOOR LOCK ACTUATOR (LH) E-09
C-210
MU801331
C-211
MU801403
C-212
C-215
C-225
J/B SIDE
F-12
MU801839
F-13
MU802335
Wire colour code
B : Black LG : Light green G : Green L : Blue
W : White Y : Yellow SB : Sky blue BR : Brown
O : Orange GR : Gray R : Red P : Pink V : Violet
H4J11E06AB

CENTRAL DOOR LOCKING SYSTEM <WAGON LHD WITH KEYLESS ENTRY> (CONTINUED)

3

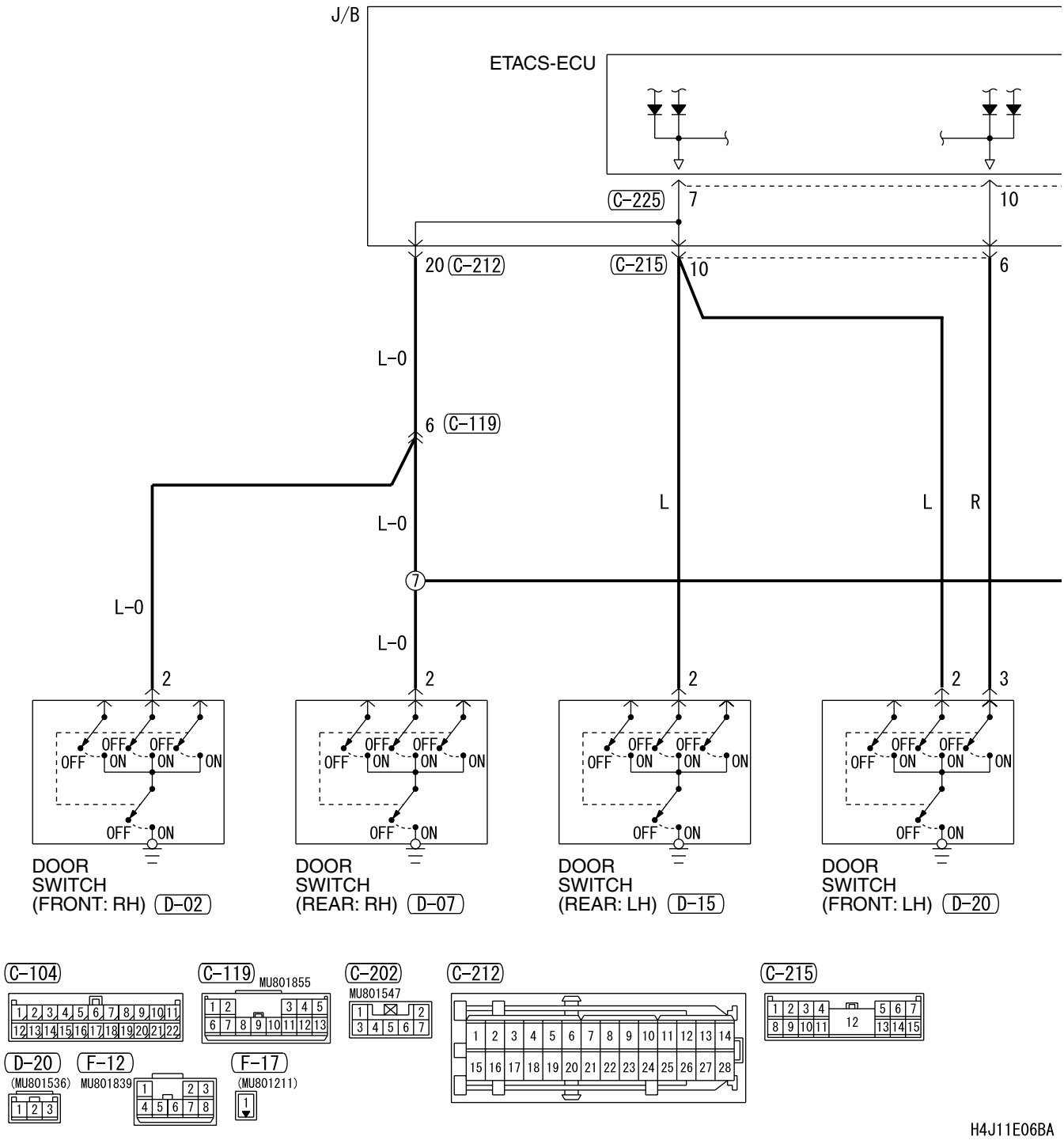

4

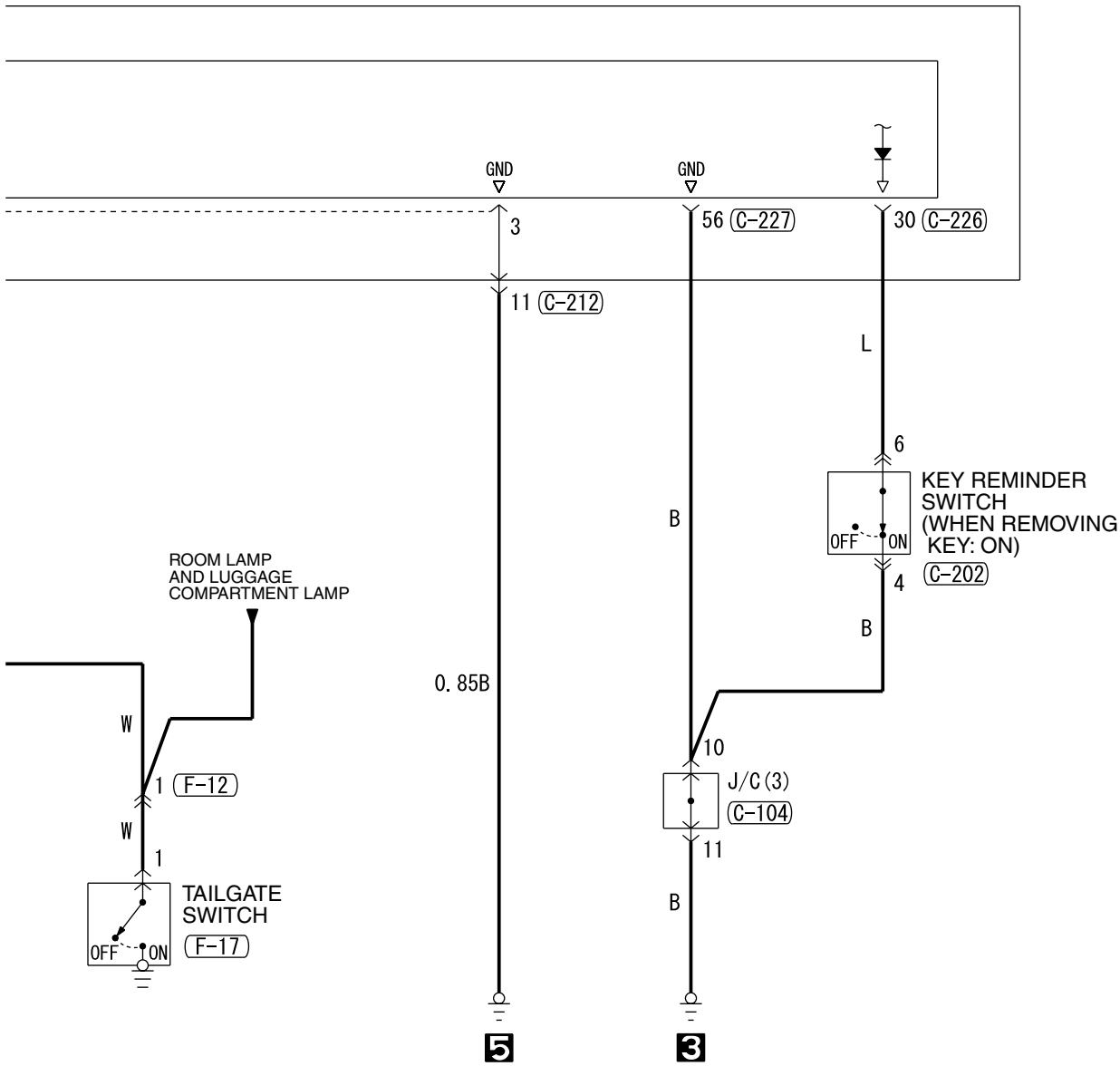

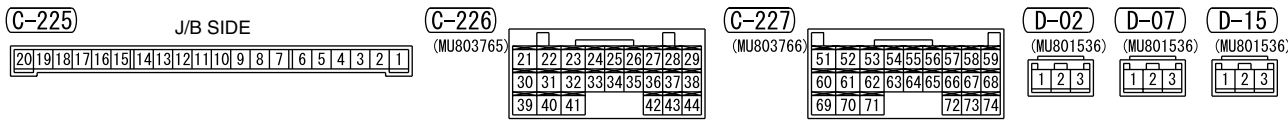

Wire colour code
B : Black LG : Light green G : Green L : Blue W : White Y : Yellow SB : Sky blue
BR : Brown O : Orange GR : Gray R : Red P : Pink V : Violet

H4J11E06BB

CENTRAL DOOR LOCKING SYSTEM <WAGON LHD WITH KEYLESS ENTRY> (CONTINUED)

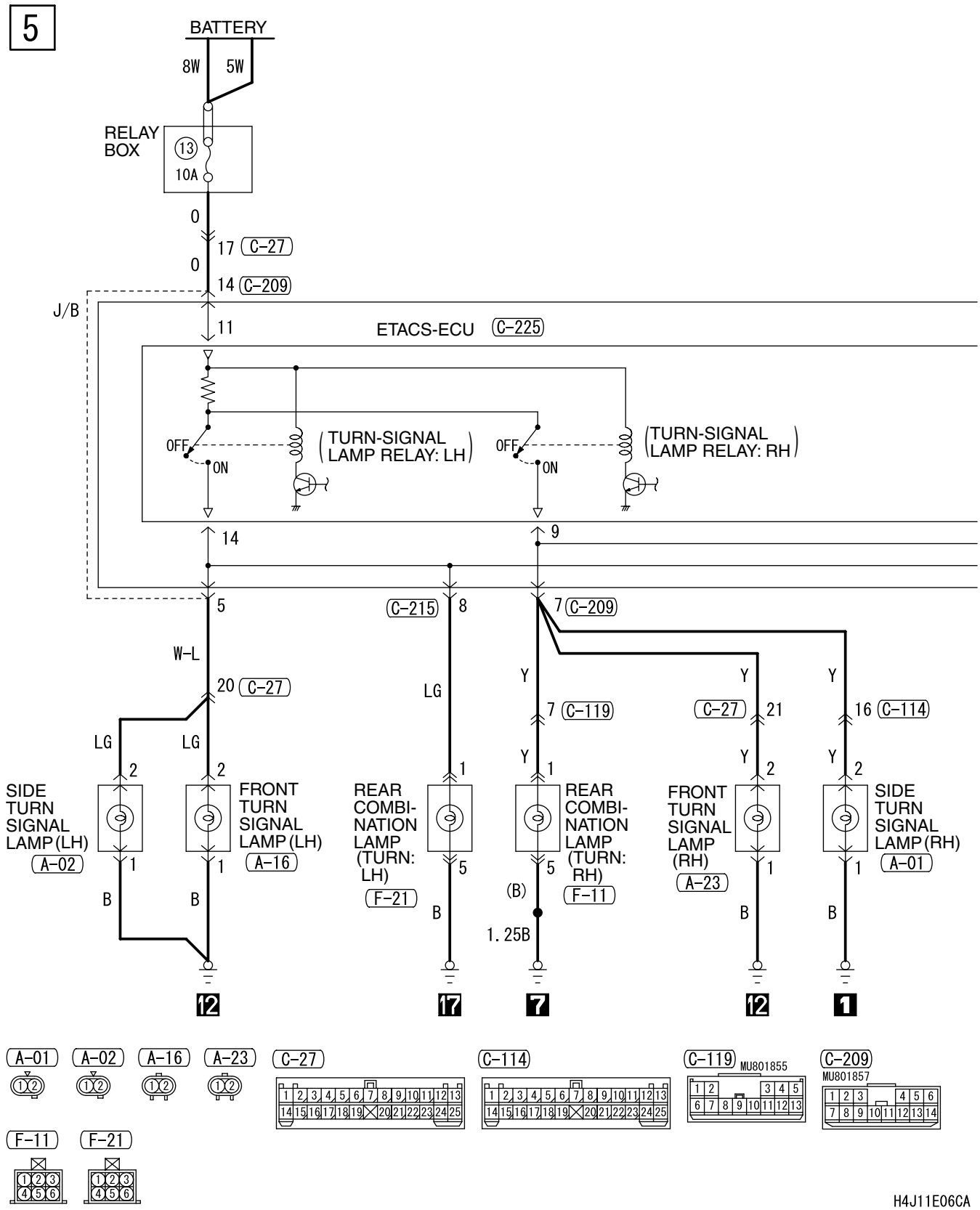

6

KEYLESS ENTRY TRANSMITTER

KEYLESS ENTRY RECEIVER

3 C-217

6

5

22

27 C-212

1

LG

P

TURN-SIGNAL LAMP AND HAZARD WARNING LAMP

B-W

1

FRONT ROOM LAMP

D-04

MAP

ROOM

MAP

ON

OFF

OFF

ON

DOOR

ON

OFF

2

W

B-W

1

REAR ROOM LAMP

D-06

ON

OFF

DOOR

2

B

<VEHICLES WITH CARTAIN AIR BAG>

C-212

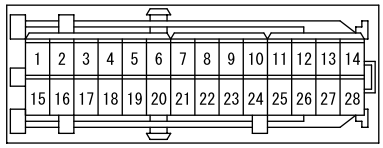

C-215

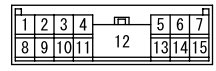

C-217

C-225 J/B SIDE

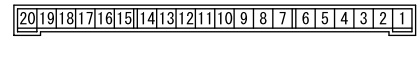

D-04

D-06

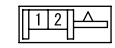

Wire colour code
B : Black LG : Light green G : Green L : Blue
W : White Y : Yellow SB : Sky blue BR : Brown

CENTRAL DOOR LOCKING SYSTEM <WAGON LHD WITH KEYLESS ENTRY> (CONTINUED)

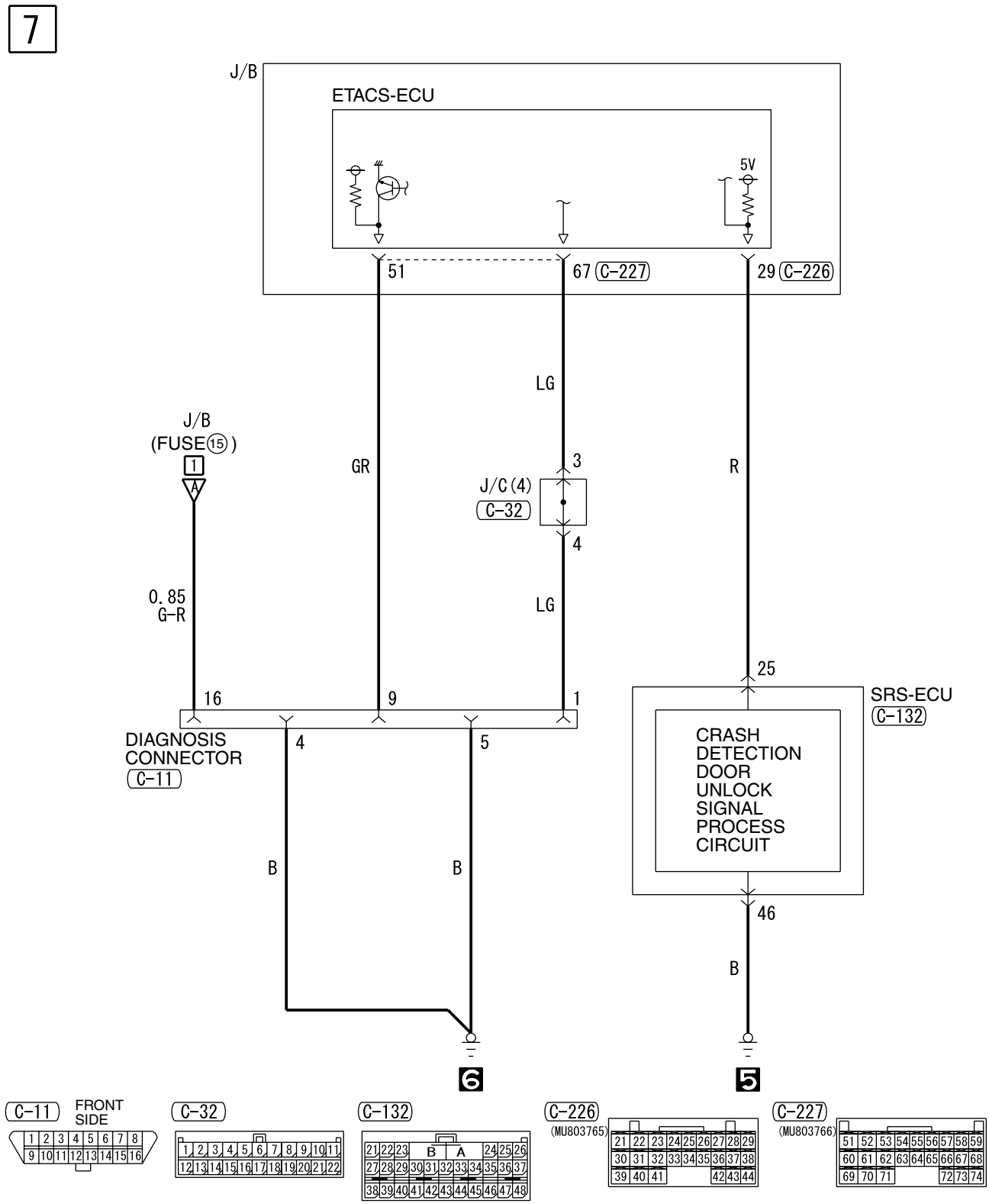

Wire colour code
B : Black LG : Light green G : Green L : Blue W : White Y : Yellow SB : Sky blue
BR : Brown O : Orange GR : Gray R : Red P : Pink V : Violet

H4J11E06DA

NOTES

CENTRAL DOOR LOCKING SYSTEM <WAGON RHD WITH KEYLESS ENTRY>

M1901004701132

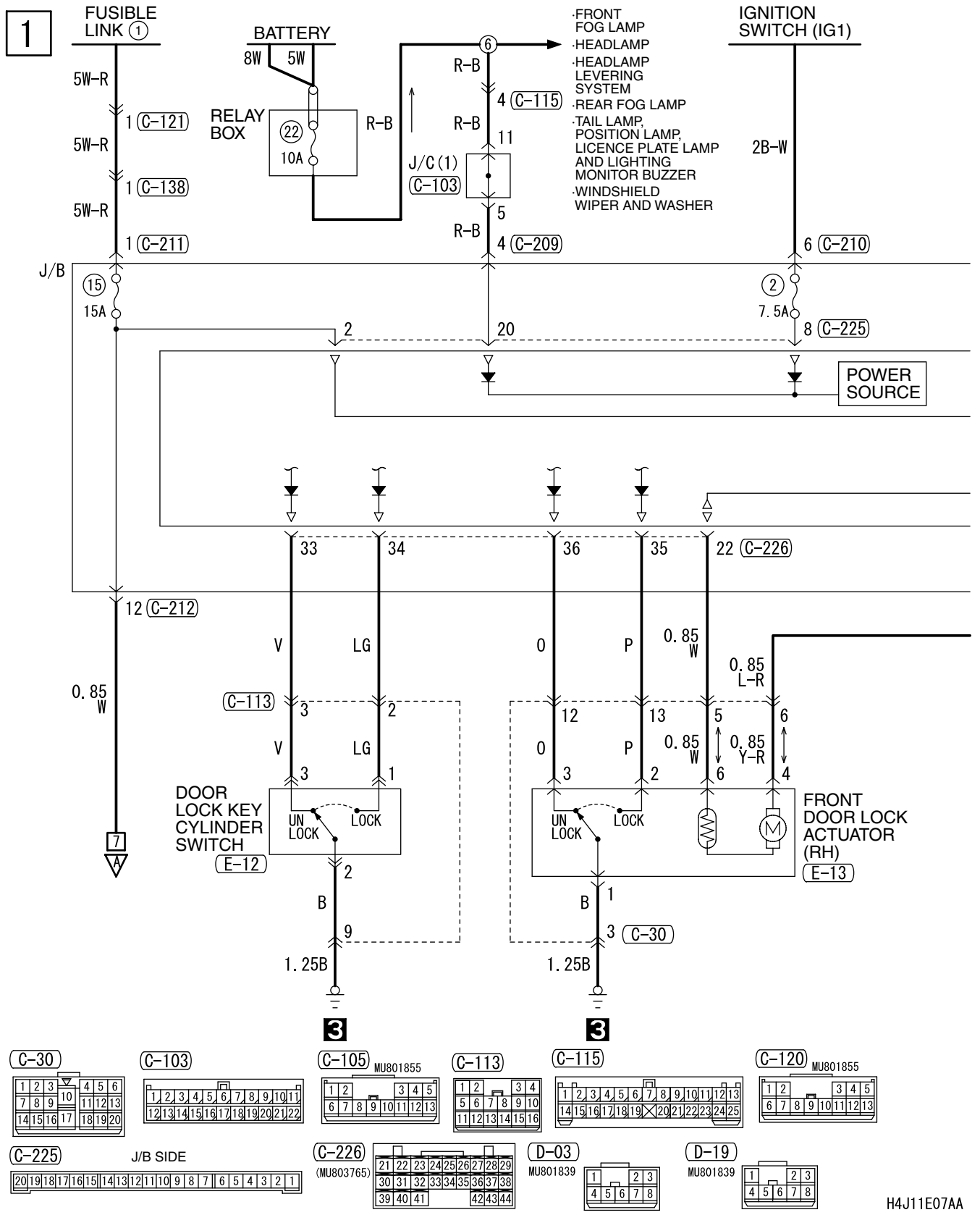

2

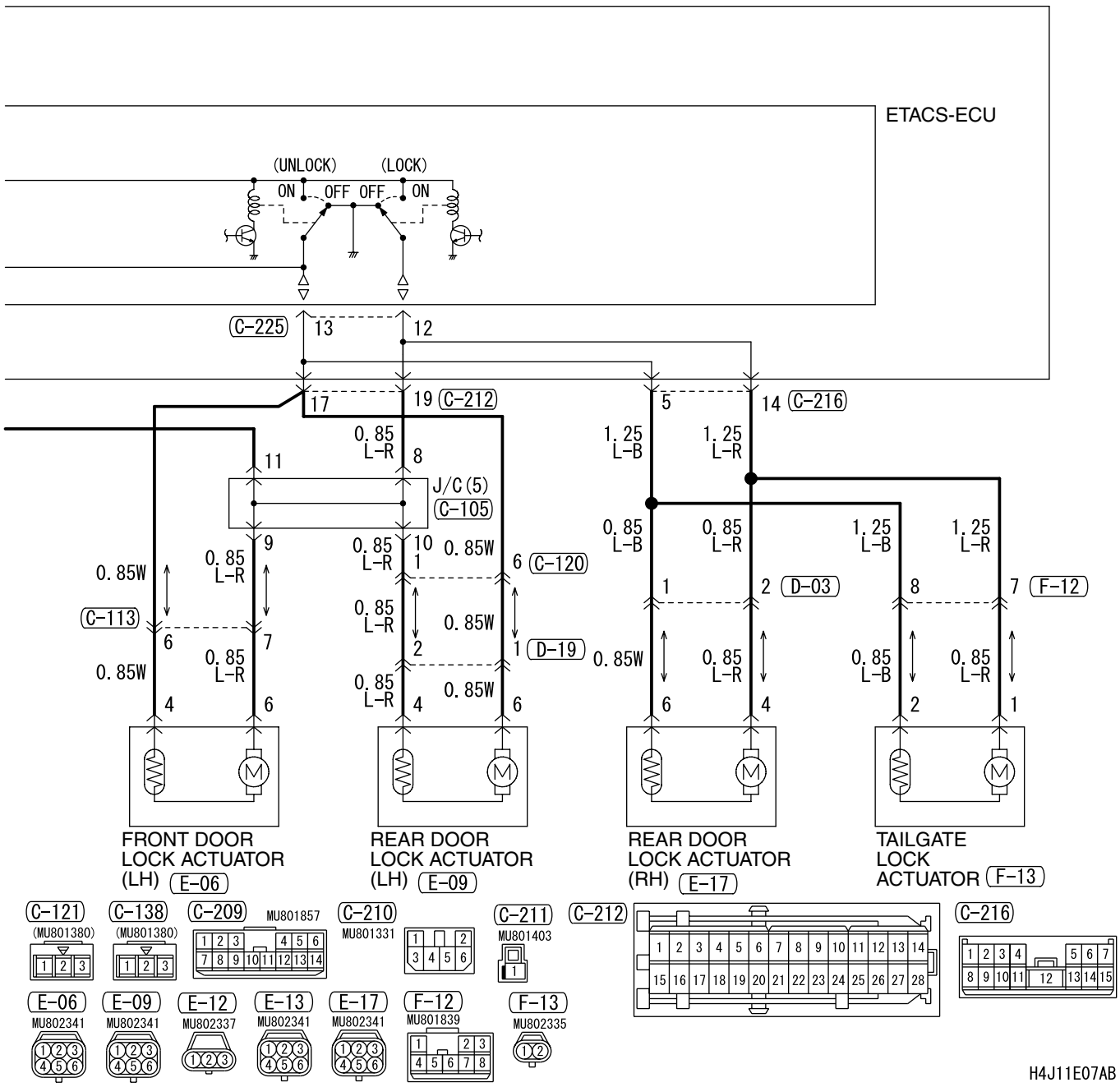
ETACS-ECU
(UNLOCK)
(LOCK)
ON
OFF
OFF
ON
C-225
13
12
17
19
C-212
5
14
C-216
0.85
L-R
8
11
1.25
L-B
1.25
L-R
J/C (5)
C-105
9
10
0.85
L-B
0.85
L-R
1.25
L-B
1.25
L-R
0.85W
0.85
L-R
0.85
L-R
0.85W
6
C-120
1
2
D-03
8
7
F-12
C-113
6
7
0.85
L-R
0.85
L-R
0.85W
1
D-19
0.85W
0.85
L-R
0.85
L-B
0.85
L-R
0.85W
0.85
L-R
0.85W
4
6
4
6
6
4
2
1
FRONT DOOR
LOCK ACTUATOR
(LH) E-06
REAR DOOR
LOCK ACTUATOR
(LH) E-09
REAR DOOR
LOCK ACTUATOR
(RH) E-17
TAILGATE
LOCK
ACTUATOR F-13
C-121
(MU801380)
C-138
(MU801380)
C-209
MU801857
C-210
MU801331
C-211
MU801403
C-212
C-216
E-06
MU802341
E-09
MU802341
E-12
MU802337
E-13
MU802341
E-17
MU802341
F-12
MU801839
F-13
MU802335
H4J11E07AB

CENTRAL DOOR LOCKING SYSTEM <WAGON RHD WITH KEYLESS ENTRY> (CONTINUED)

3

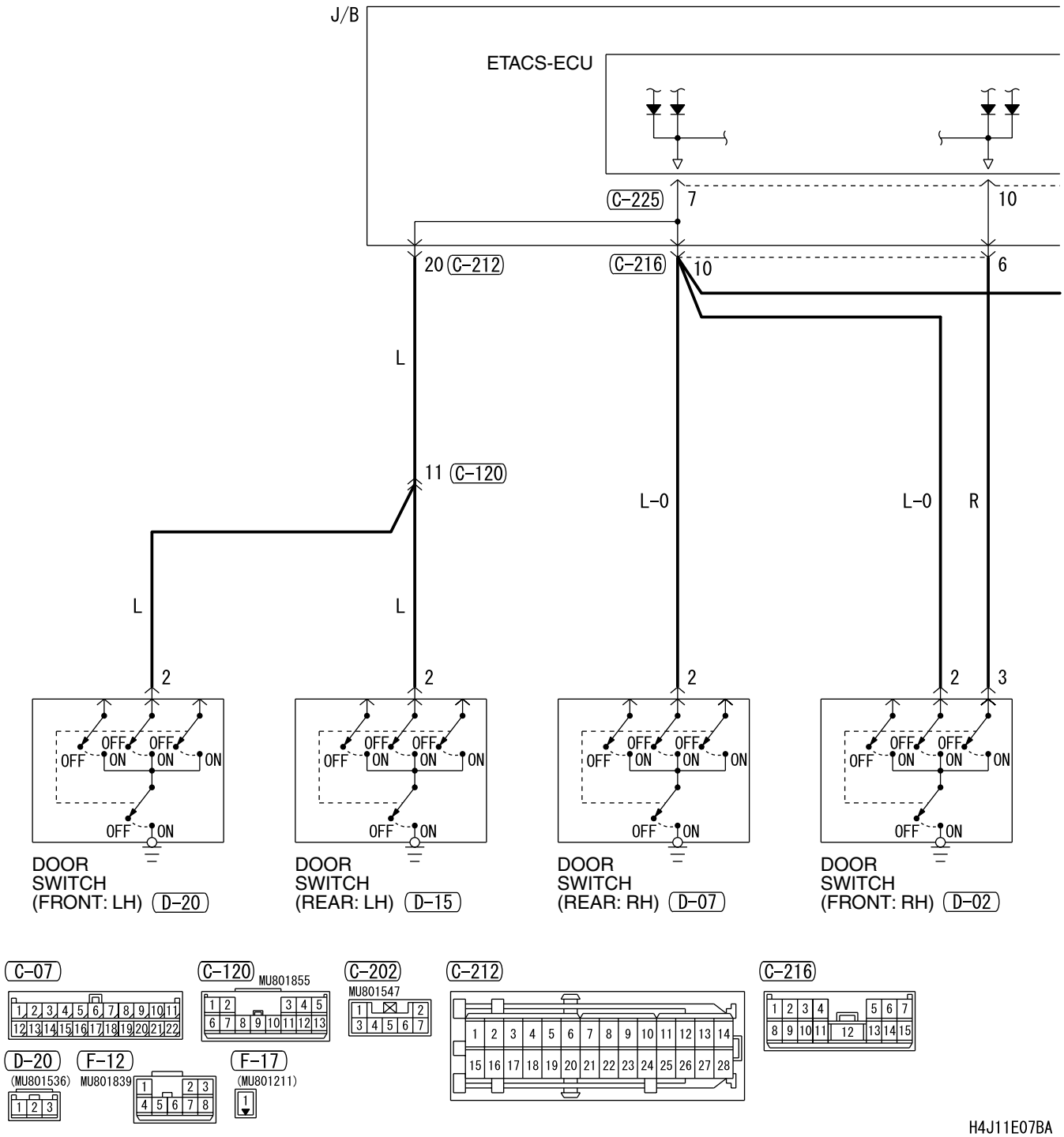

4

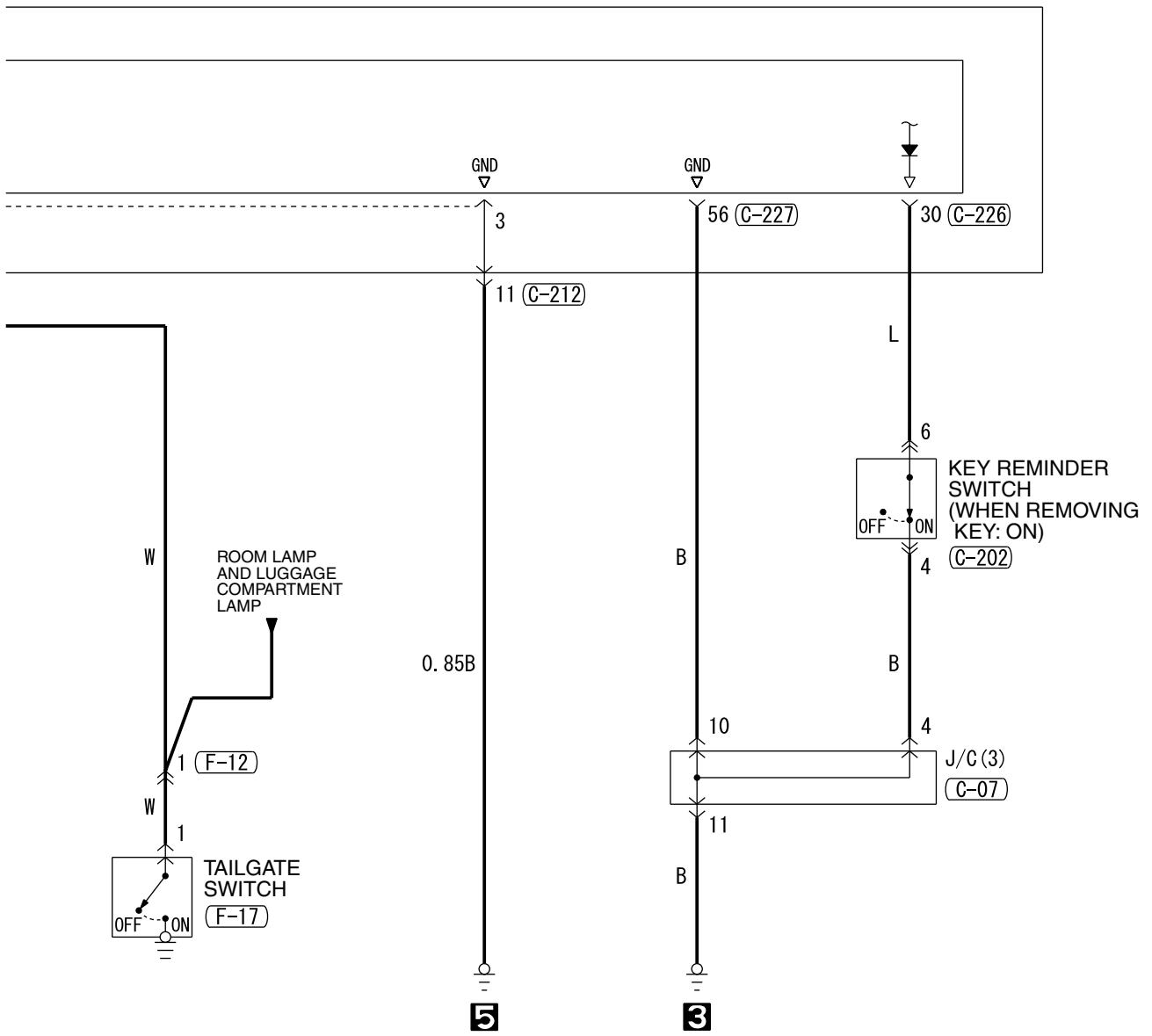

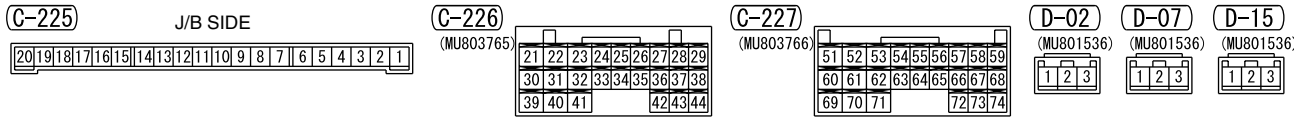

Wire colour code
B : Black LG : Light green G : Green L : Blue W : White Y : Yellow SB : Sky blue
BR : Brown O : Orange GR : Gray R : Red P : Pink V : Violet

H4J11E07BB

CENTRAL DOOR LOCKING SYSTEM <WAGON RHD WITH KEYLESS ENTRY> (CONTINUED)

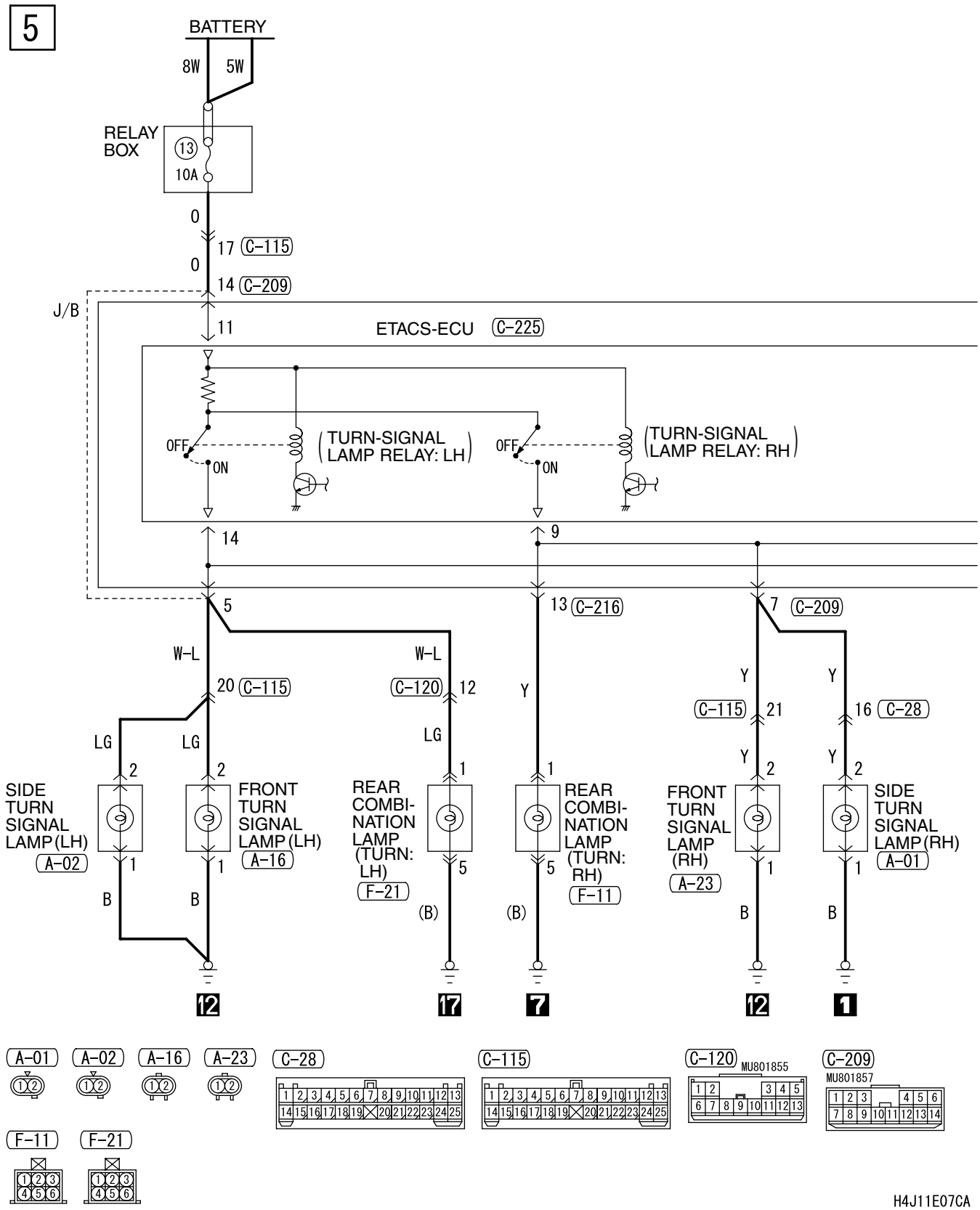

6

KEYLESS ENTRY TRANSMITTER

KEYLESS ENTRY RECEIVER

3 (C-217)
6
5
22
27 (C-212)
1
LG
P
TURN-SIGNAL LAMP AND HAZARD WARNING LAMP

B-W
1
FRONT ROOM LAMP
(D-04)
MAP
ROOM
MAP
ON
OFF
OFF
ON
DOOR
ON
OFF
2
W

B-W
1
REAR ROOM LAMP
(D-06)
ON
OFF
DOOR
2
B

<VEHICLES WITH CARTAIN AIR BAG>

(C-212)

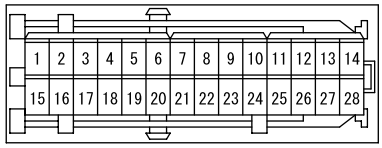

(C-216)

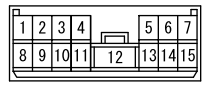

(C-217)
MU801685

(C-225) J/B SIDE

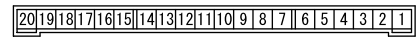

(D-04)

(D-06)

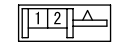

Wire colour code
B : Black LG : Light green G : Green L : Blue
W : White Y : Yellow SB : Sky blue BR : Brown
O : Orange GR : Gray R : Red P : Pink V : Violet

H4J11E07CB

CENTRAL DOOR LOCKING SYSTEM <WAGON RHD WITH KEYLESS ENTRY> (CONTINUED)

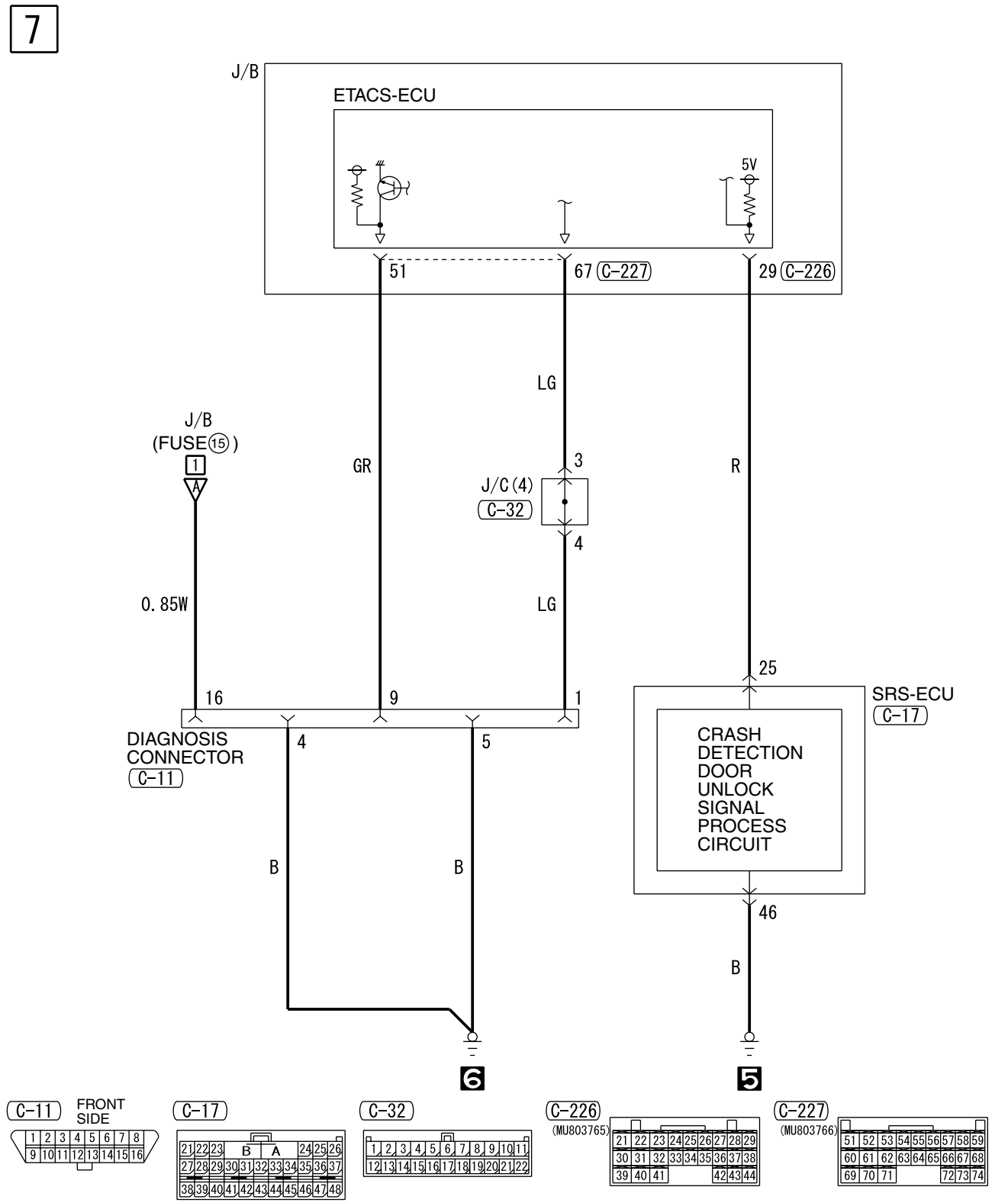

Wire colour code
B : Black LG : Light green G : Green L : Blue W : White Y : Yellow SB : Sky blue
BR : Brown O : Orange GR : Gray R : Red P : Pink V : Violet

H4J11E07DA

NOTES

HEATER

M1901013300225

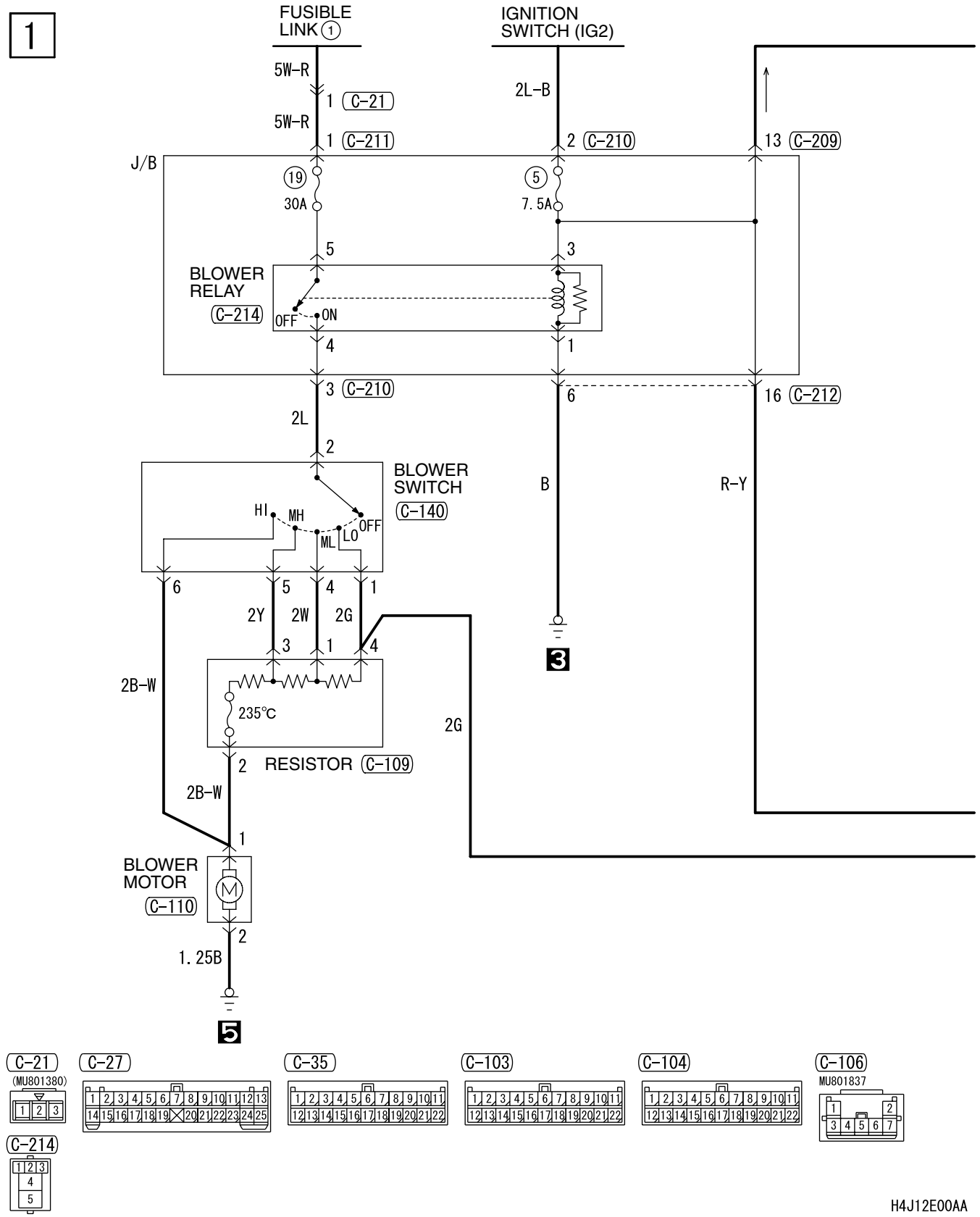

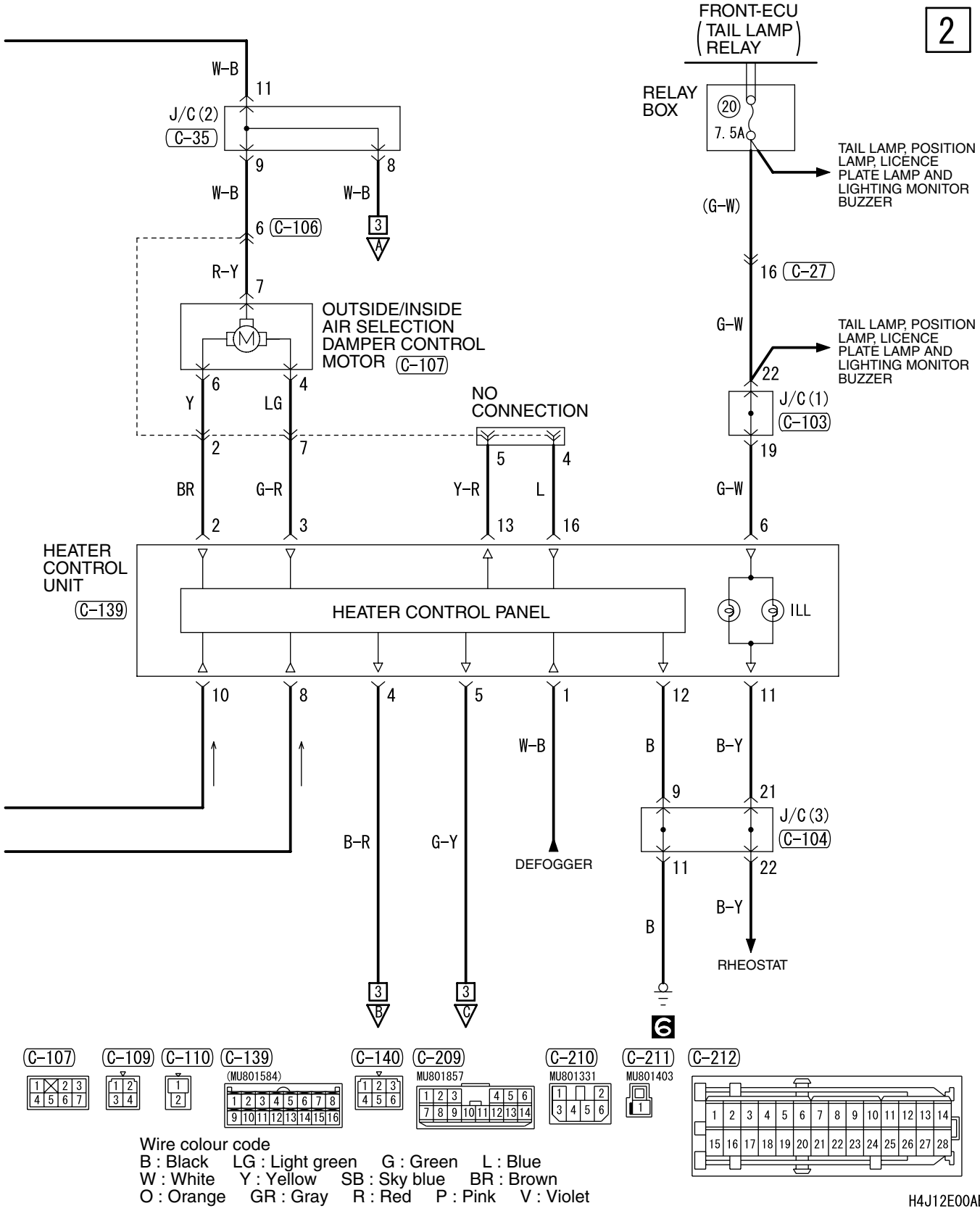
2
FRONT-ECU
(TAIL LAMP RELAY)
RELAY BOX
20
7.5A
TAIL LAMP, POSITION LAMP, LICENCE PLATE LAMP AND LIGHTING MONITOR BUZZER
(G-W)
16 C-27
G-W
22
J/C (1)
C-103
19
G-W
6
W-B
11
J/C (2)
C-35
9
8
W-B
W-B
6 C-106
3
A
R-Y
7
OUTSIDE/INSIDE AIR SELECTION DAMPER CONTROL MOTOR C-107
6
4
Y
LG
NO CONNECTION
2
7
5
4
BR
G-R
Y-R
L
2
3
13
16
HEATER CONTROL UNIT
C-139
HEATER CONTROL PANEL
ILL
10
8
4
5
1
12
11
W-B
B
B-Y
9
21
J/C (3)
C-104
B-R
G-Y
DEFOGGER
11
22
B-Y
B
RHEOSTAT
3
B
3
C
6
C-107
C-109
C-110
C-139
(MU801584)
C-140
C-209
MU801857
C-210
MU801331
C-211
MU801403
C-212
Wire colour code
B : Black LG : Light green G : Green L : Blue
W : White Y : Yellow SB : Sky blue BR : Brown
O : Orange GR : Gray R : Red P : Pink V : Violet
H4J12E00AB

HEATER <LHD> (CONTINUED)

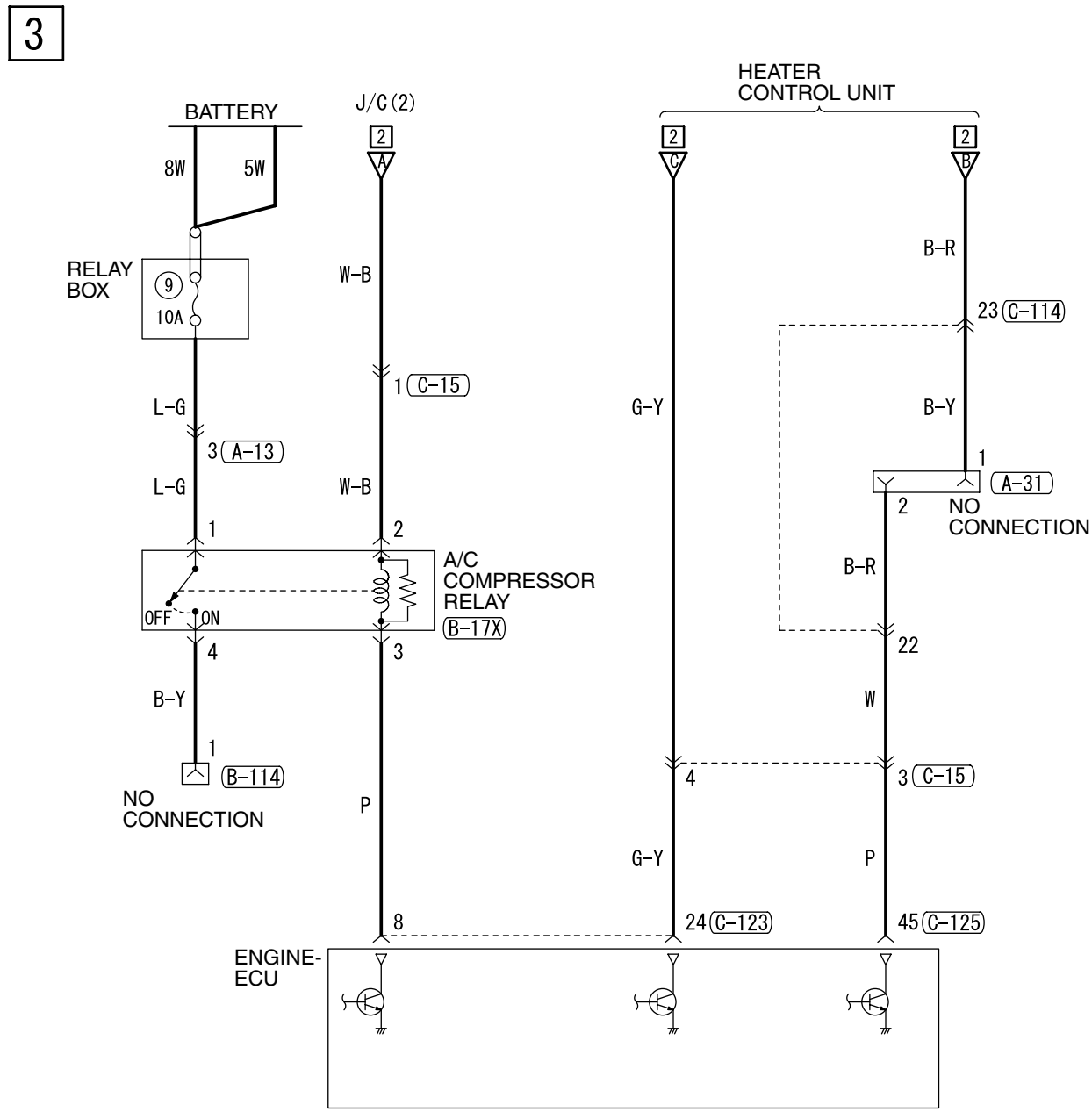

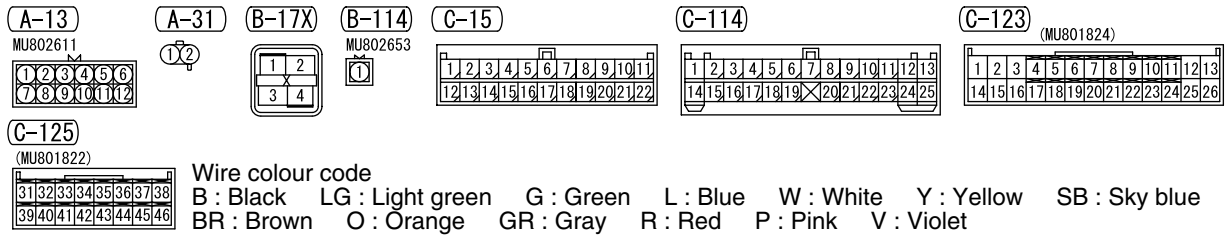

Wire colour code
B : Black LG : Light green G : Green L : Blue W : White Y : Yellow SB : Sky blue
BR : Brown O : Orange GR : Gray R : Red P : Pink V : Violet

H4J12E00BA

NOTES

HEATER <RHD>

M1901013300236

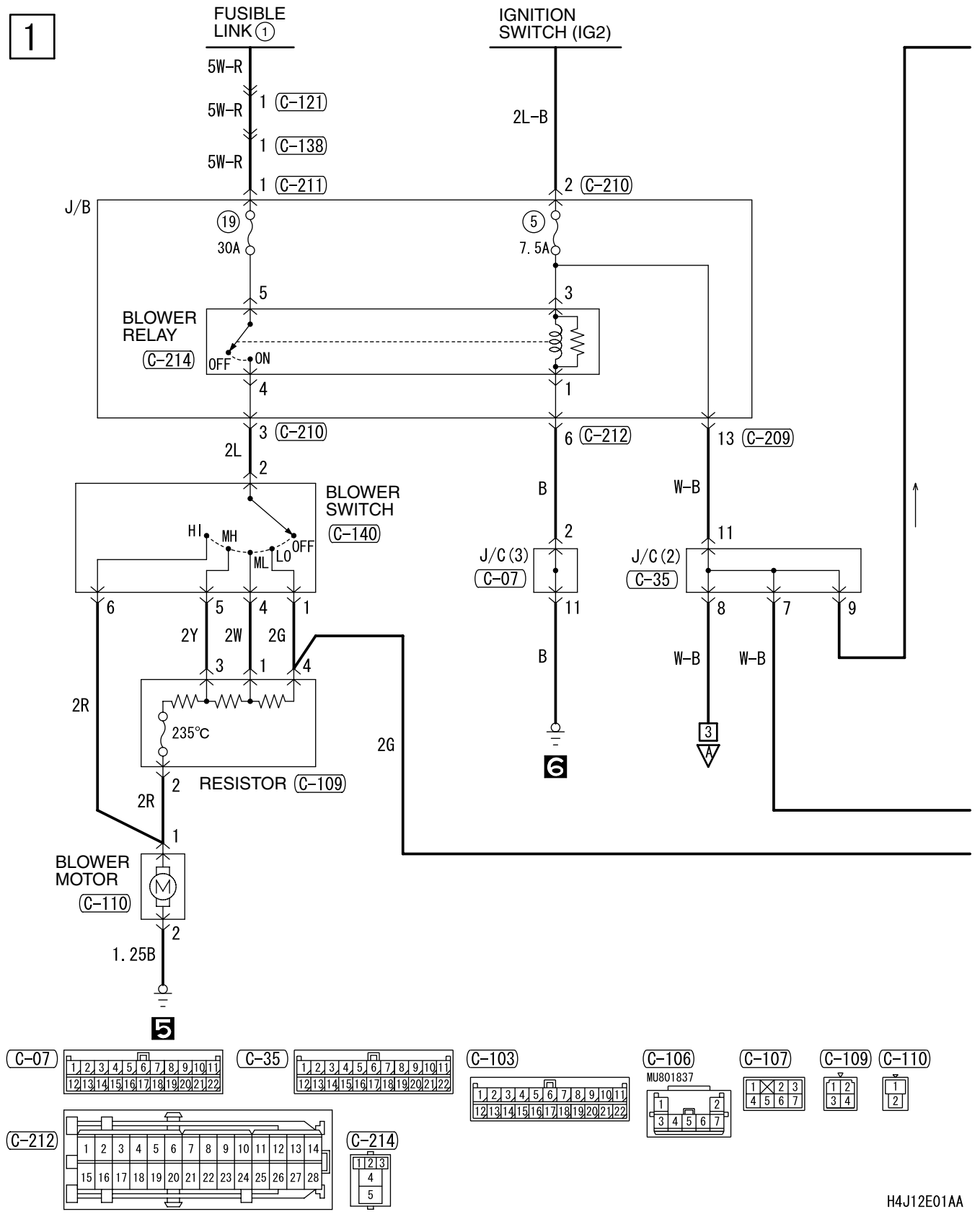

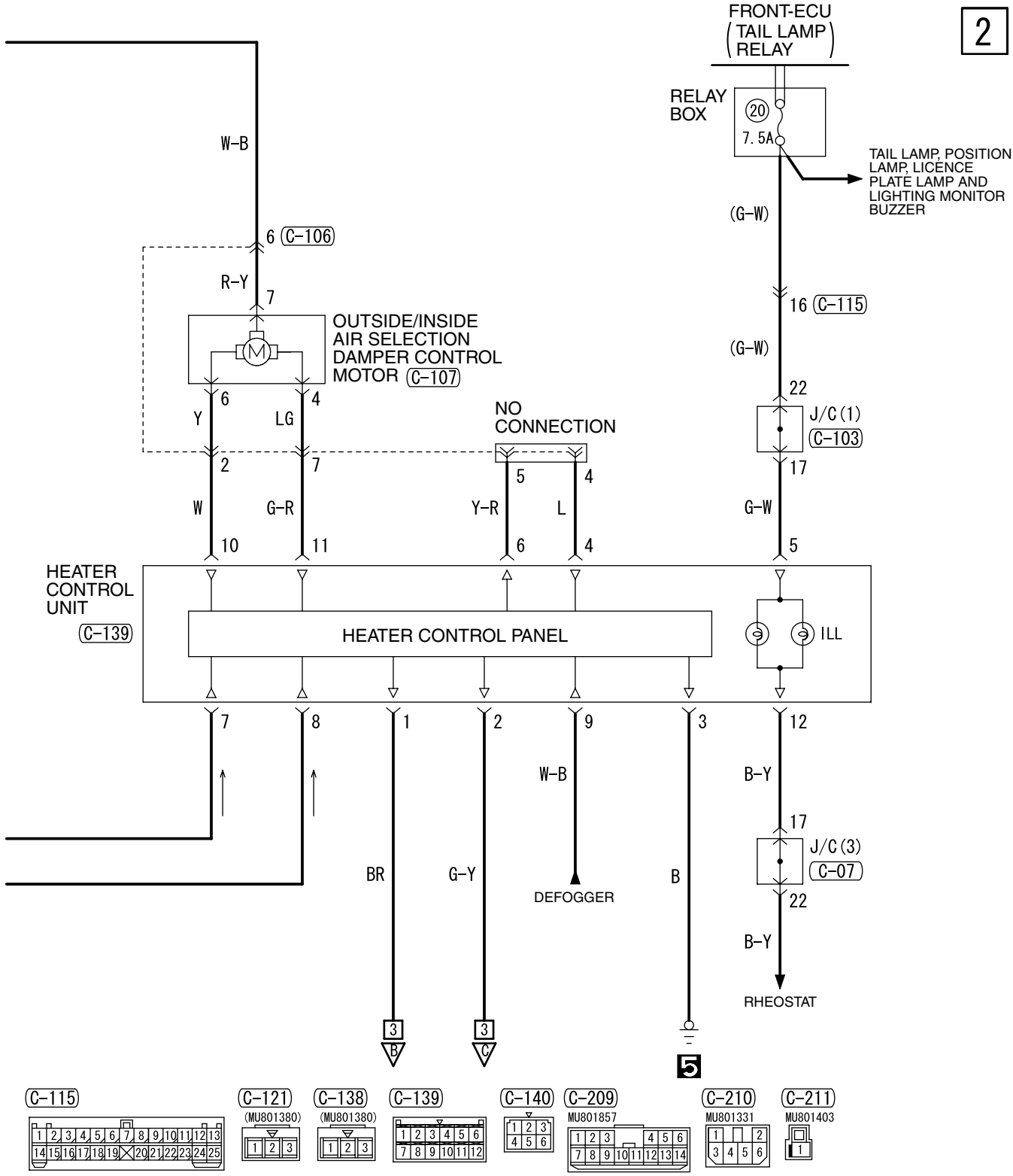

Wire colour code
B : Black LG : Light green G : Green L : Blue W : White Y : Yellow SB : Sky blue
BR : Brown O : Orange GR : Gray R : Red P : Pink V : Violet

H4J12E01AB

HEATER <RHD> (CONTINUED)

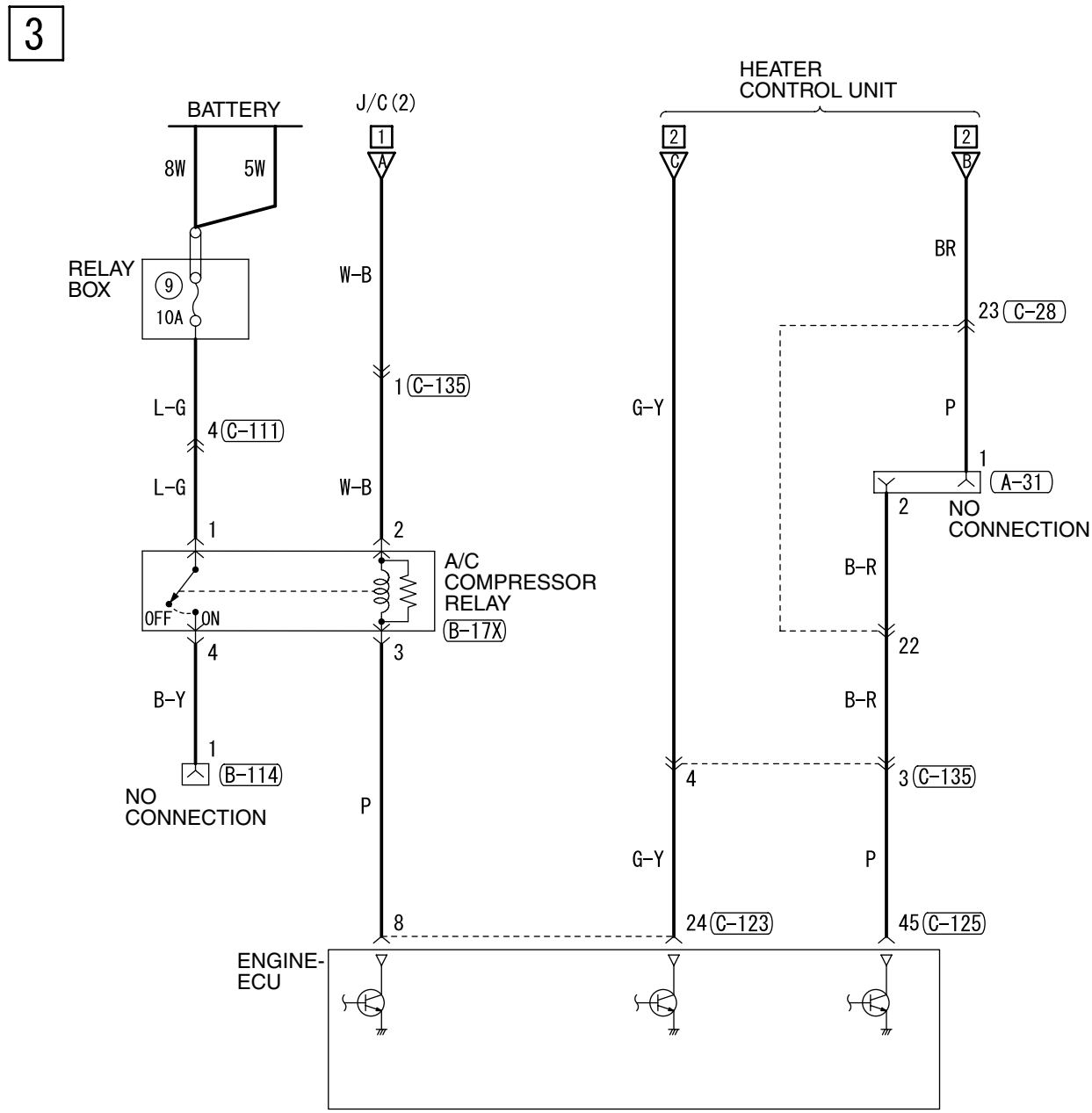

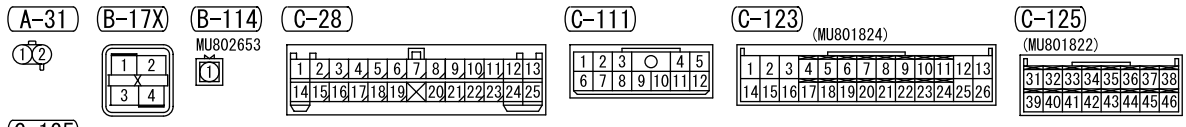

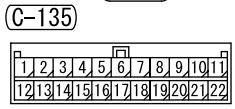

Wire colour code
B : Black LG : Light green G : Green L : Blue
W : White Y : Yellow SB : Sky blue BR : Brown
O : Orange GR : Gray R : Red P : Pink V : Violet

H4J12E01BA

NOTES

MANUAL AIR CONDITIONER <LHD>

M1901005501023

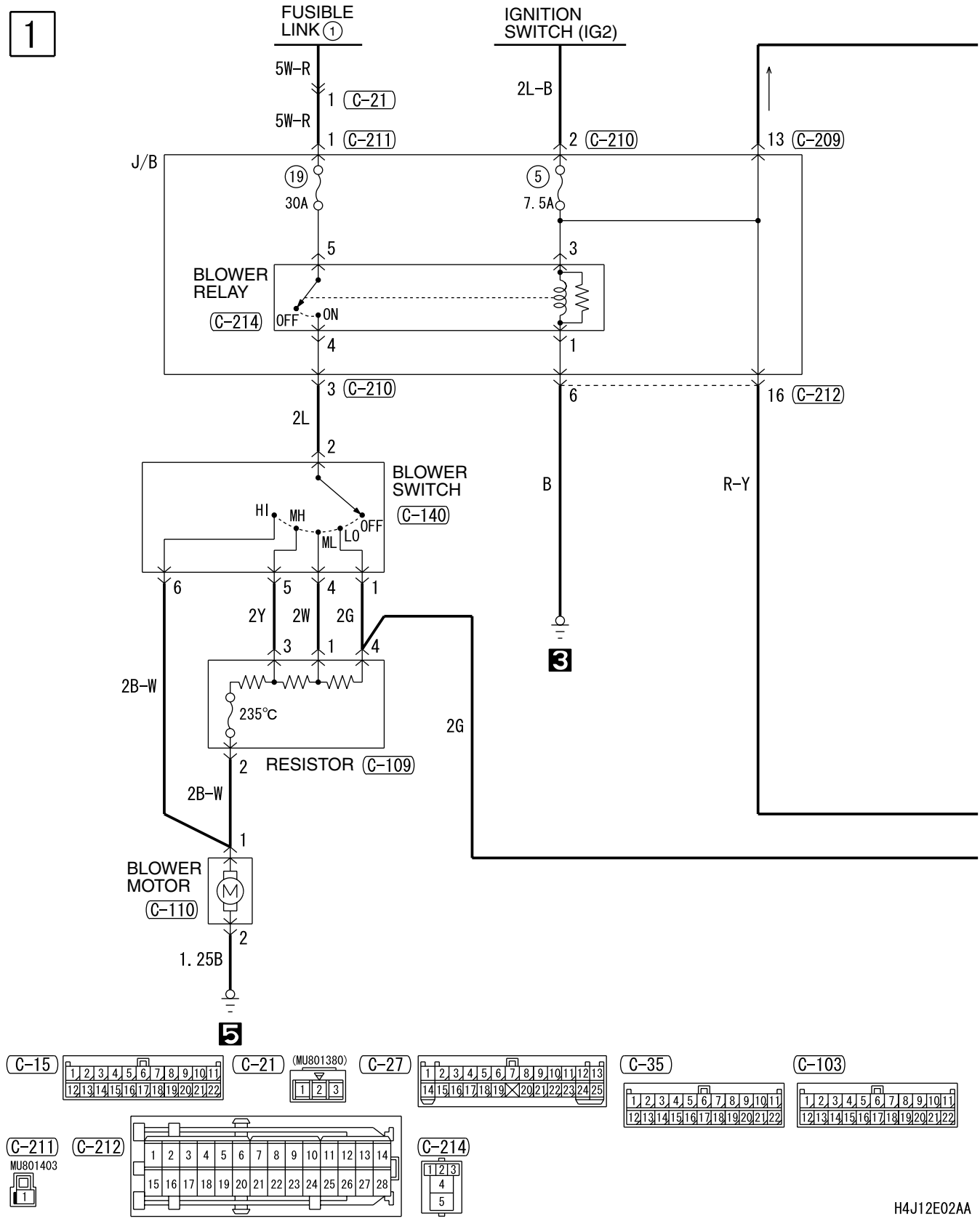

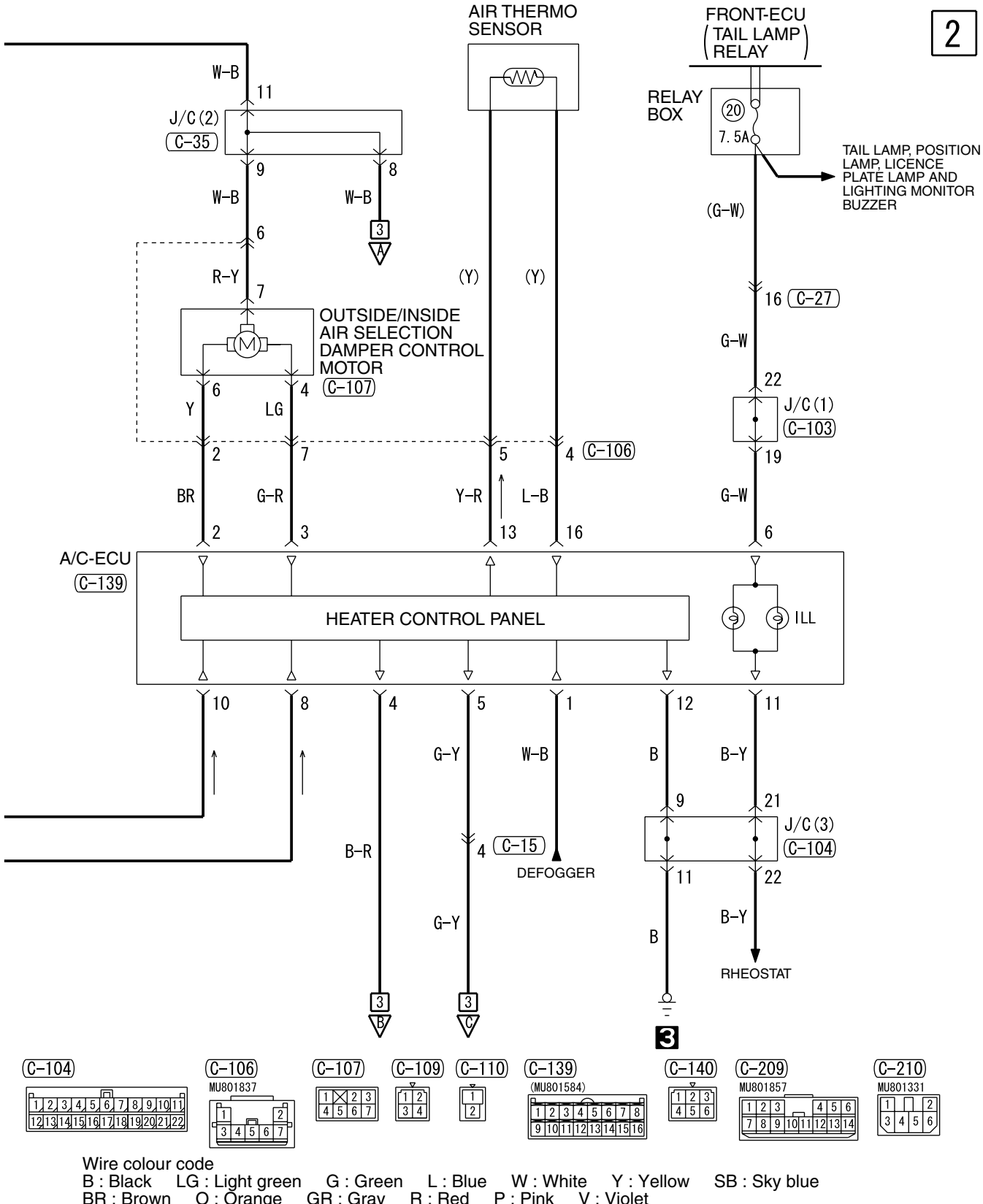

Wire colour code
B : Black LG : Light green G : Green L : Blue W : White Y : Yellow SB : Sky blue
BR : Brown O : Orange GR : Gray R : Red P : Pink V : Violet

H4J12E02AB

MANUAL AIR CONDITIONER <LHD> (CONTINUED)

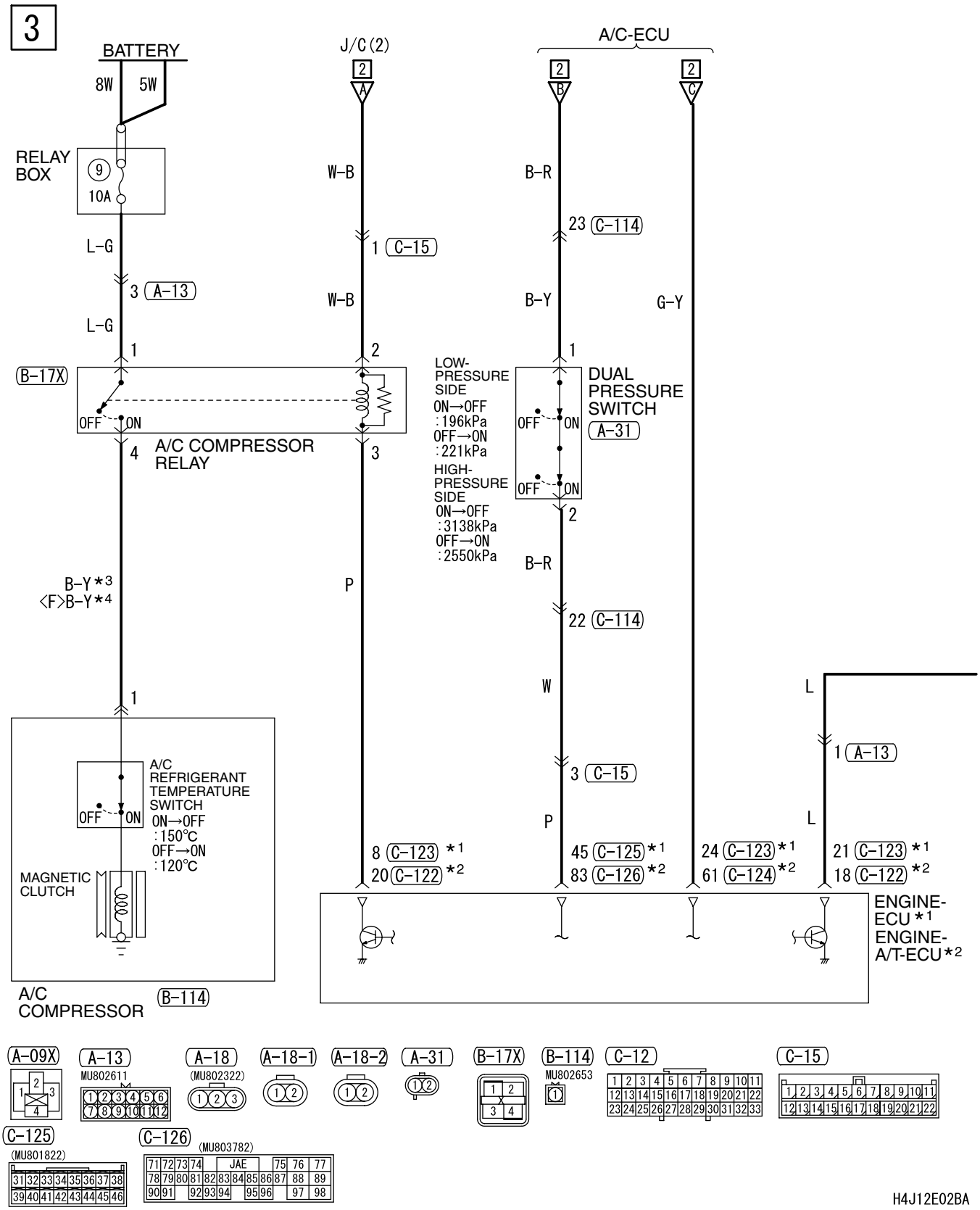

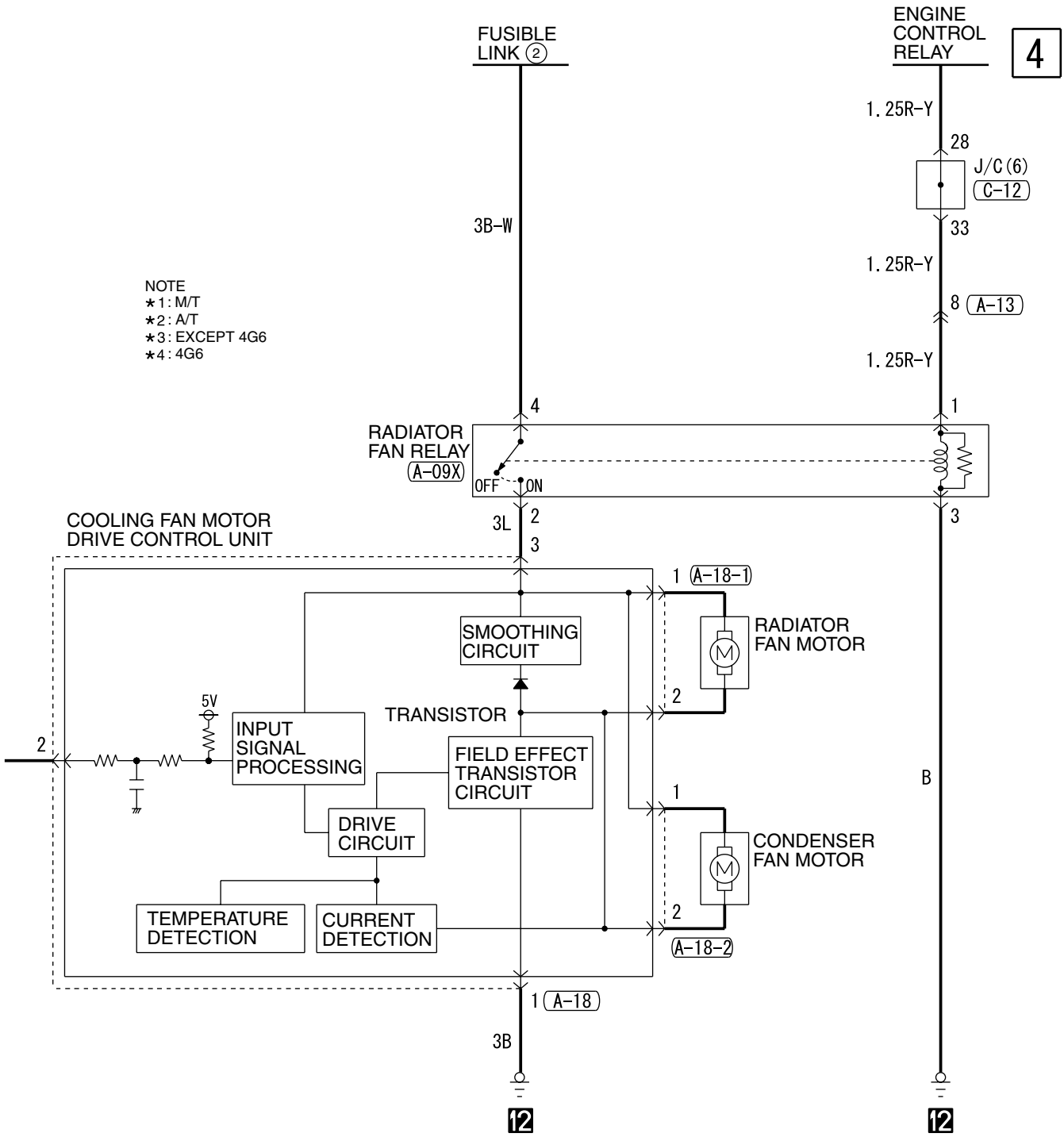

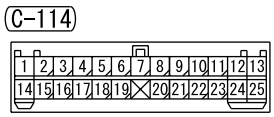

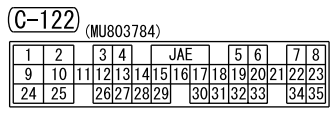

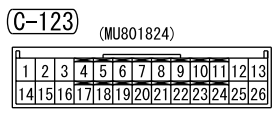

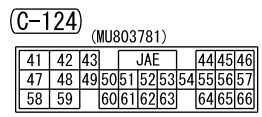

Wire colour code
B : Black LG : Light green G : Green L : Blue W : White Y : Yellow SB : Sky blue
BR : Brown O : Orange GR : Gray R : Red P : Pink V : Violet

H4J12E02BB

MANUAL AIR CONDITIONER <RHD>

M1901005501034

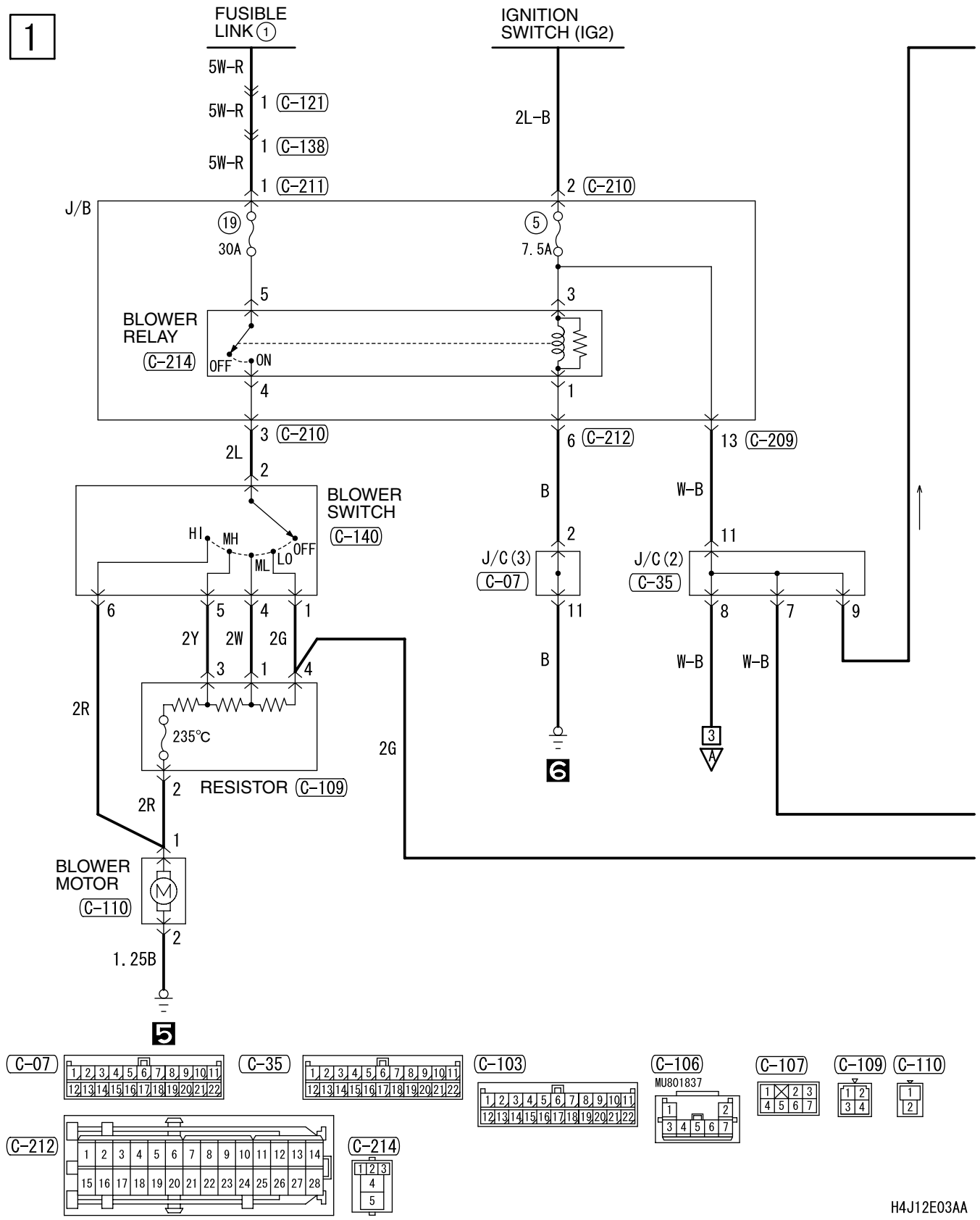

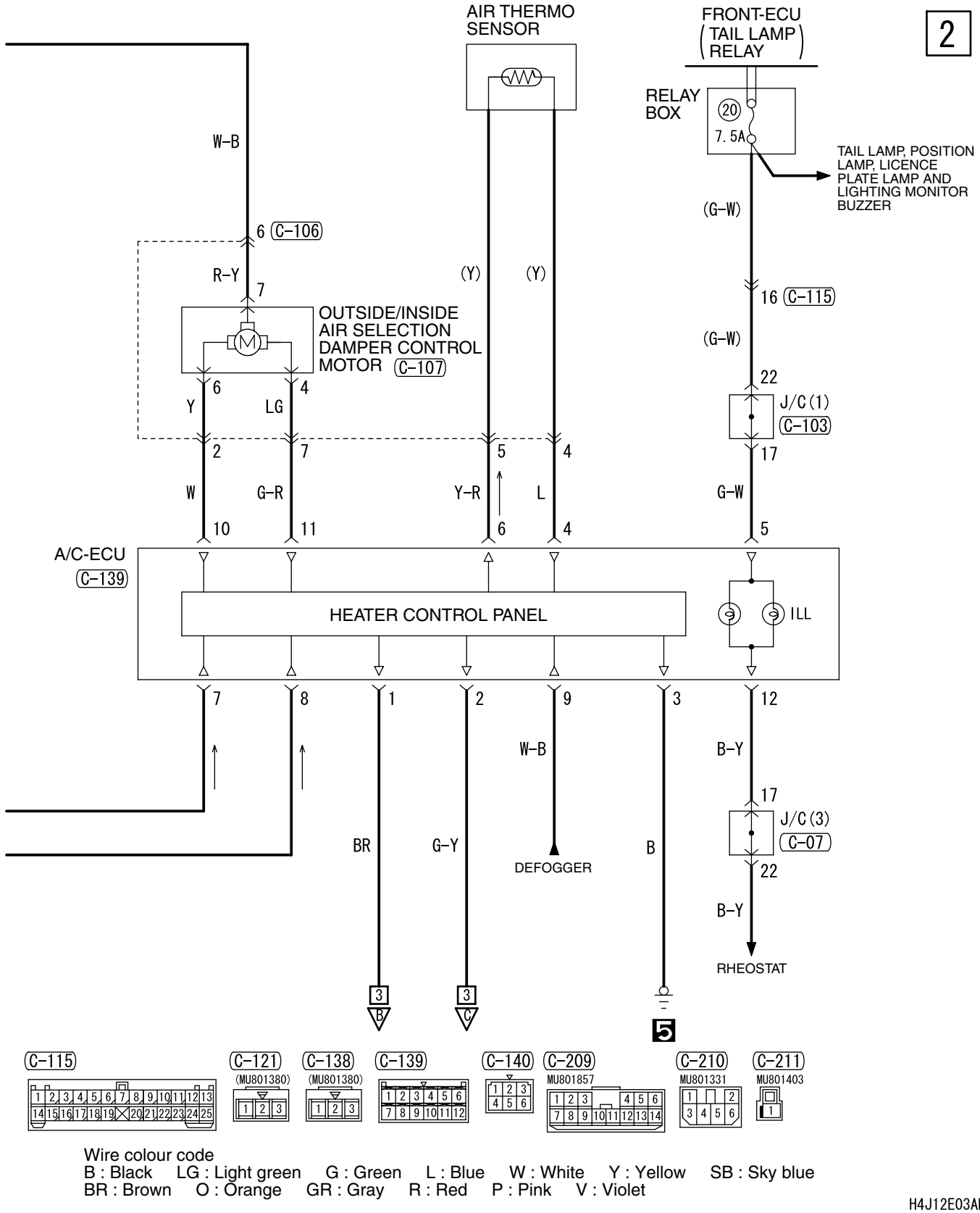

Wire colour code
B : Black LG : Light green G : Green L : Blue W : White Y : Yellow SB : Sky blue
BR : Brown O : Orange GR : Gray R : Red P : Pink V : Violet

H4J12E03AB

MANUAL AIR CONDITIONER <RHD> (CONTINUED)

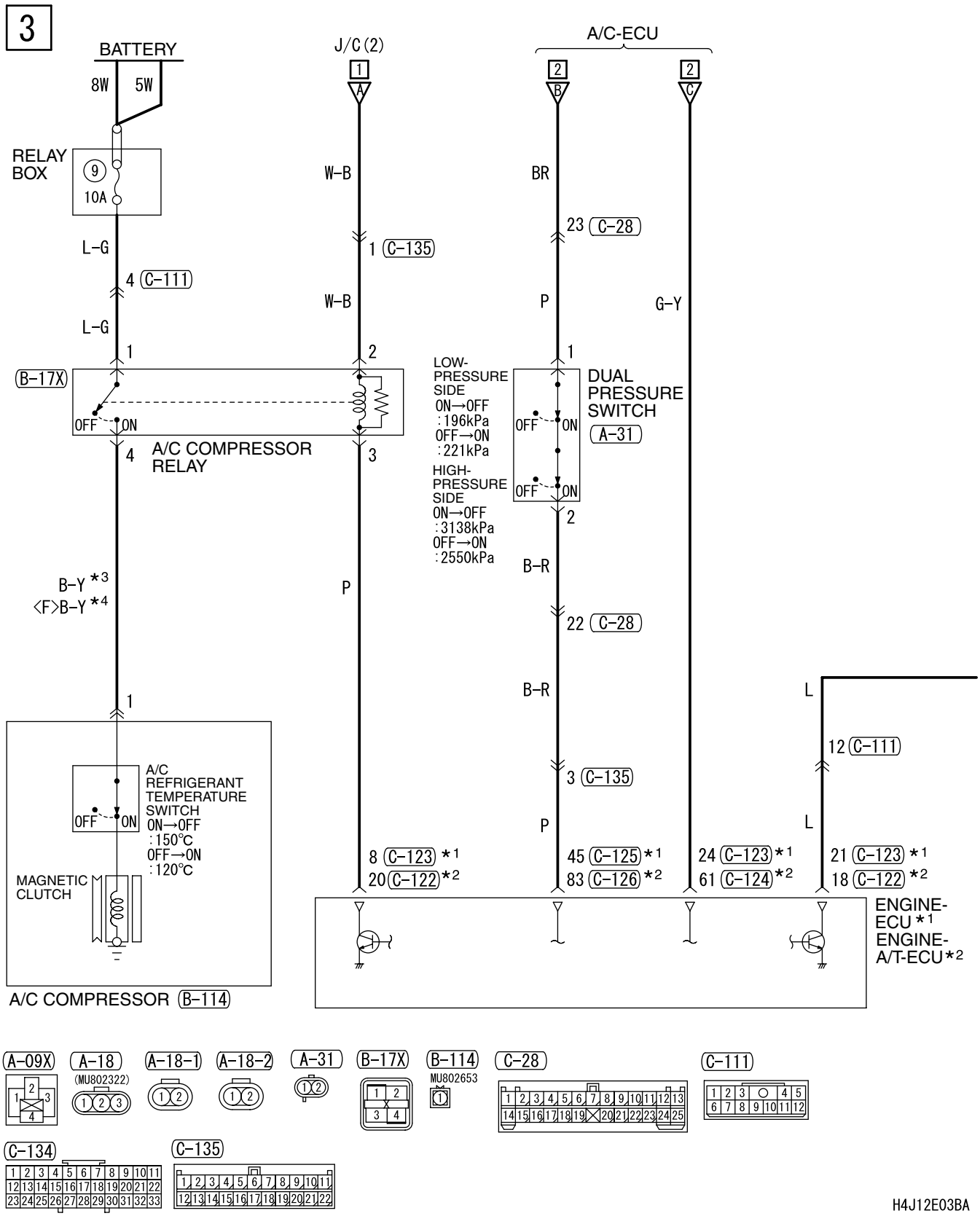

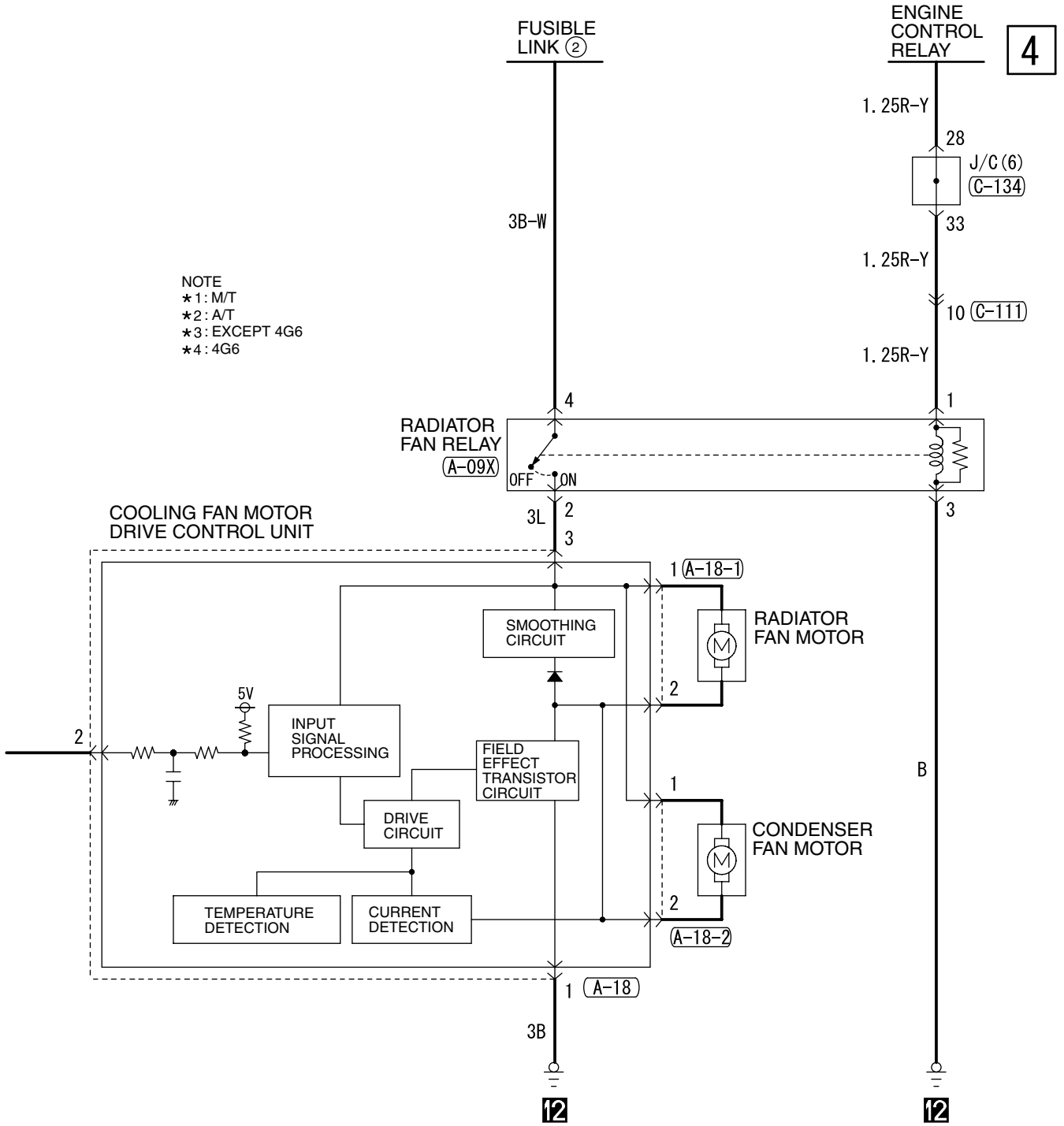

C-122 (MU803784)

1	2		3	4				JAE				5	6				7	8					
9	10	11	12	13	14	15	16	17	18	19	20	21	22	23									
24	25		26	27	28	29		30	31	32	33		34	35									

C-123 (MU801824)

1	2	3	4	5	6	7	8	9	10	11	12	13
14	15	16	17	18	19	20	21	22	23	24	25	26

C-124 (MU803781)

41	42	43				JAE				44	45	46	
47	48	49	50	51	52	53	54	55	56	57			
58	59		60	61	62	63		64	65	66			

C-125 (MU801822)

31	32	33	34	35	36	37	38
39	40	41	42	43	44	45	46

C-126 (MU803782)

71	72	73	74			JAE			75	76	77		
78	79	80	81	82	83	84	85	86	87	88	89		
90	91		92	93	94		95	96		97	98		

Wire colour code
B : Black LG : Light green G : Green L : Blue W : White Y : Yellow SB : Sky blue
BR : Brown O : Orange GR : Gray R : Red P : Pink V : Violet

H4J12E03BB

WINDSHIELD WIPER AND WASHER <LHD>

M1901006100605

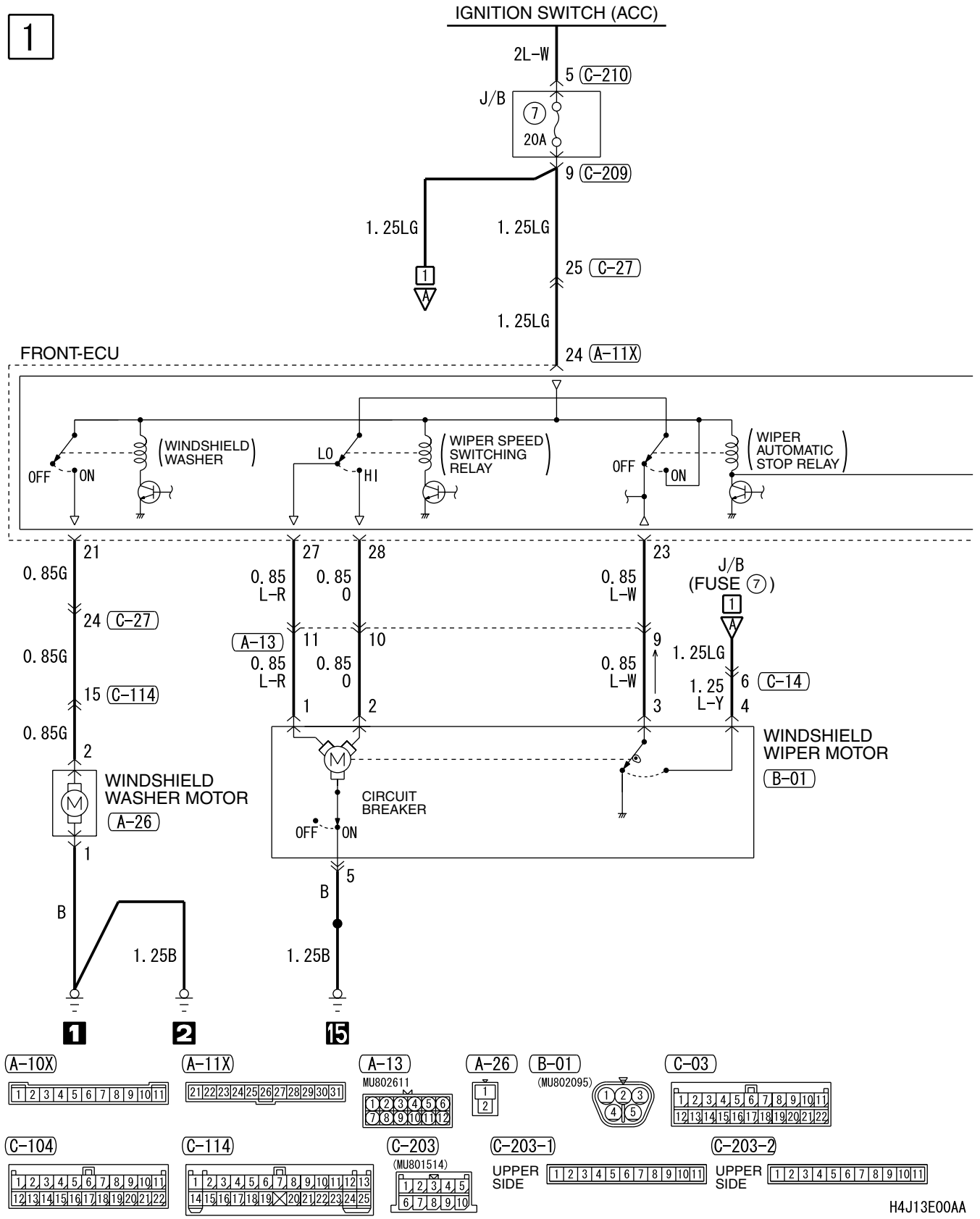

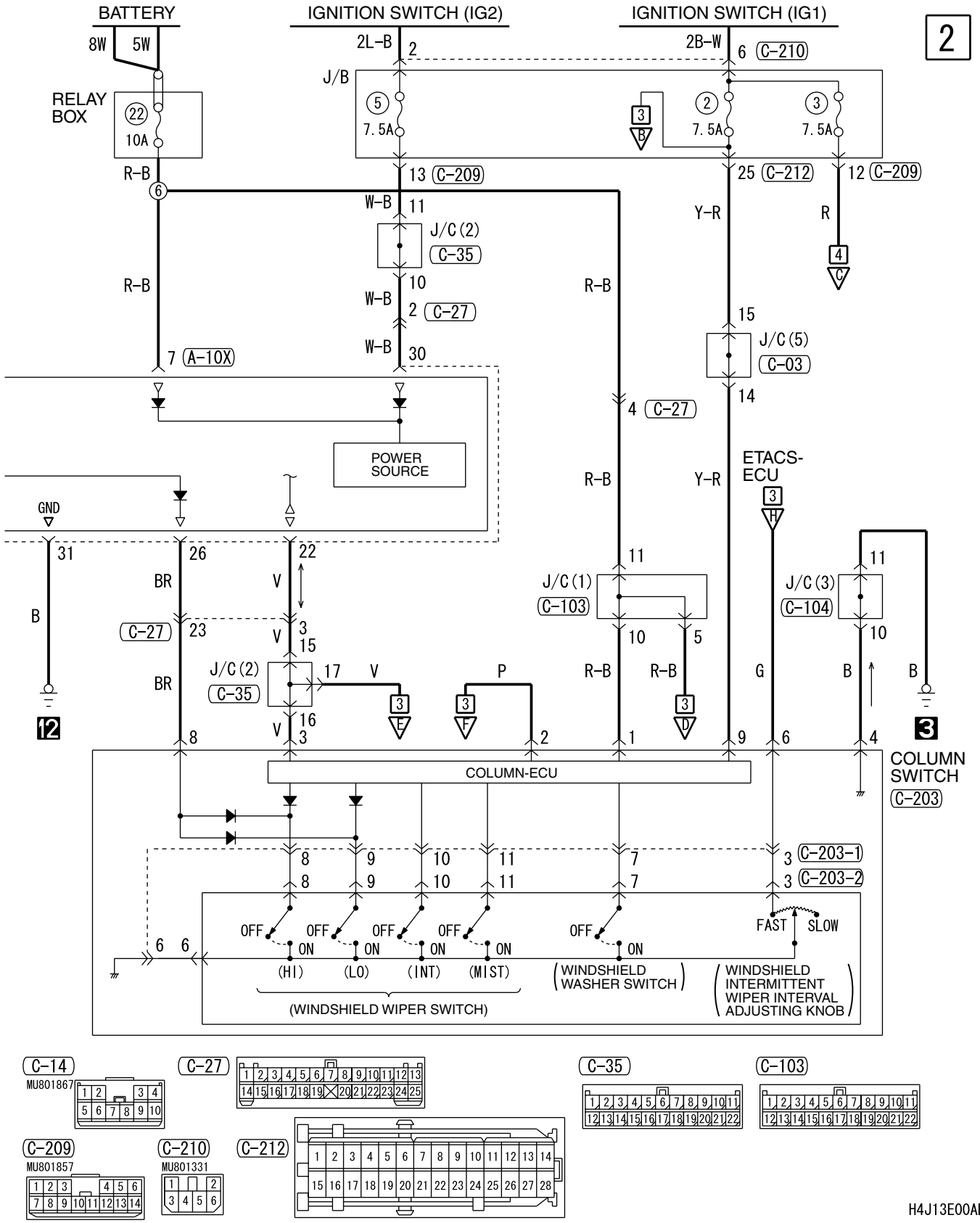
BATTERY
IGNITION SWITCH (IG2)
IGNITION SWITCH (IG1)
2
8W
5W
RELAY BOX
22
10A
2L-B
2
2B-W
6
C-210
J/B
5
7.5A
2
7.5A
3
7.5A
R-B
6
13
C-209
25
C-212
12
C-209
W-B
11
Y-R
R
J/C(2)
C-35
R-B
10
W-B
2
C-27
R-B
15
W-B
30
J/C(5)
C-03
7
A-10X
14
4
C-27
POWER SOURCE
R-B
Y-R
ETACS-ECU
GND
31
26
22
11
11
BR
V
J/C(1)
C-103
J/C(3)
C-104
B
C-27
23
V
3
15
10
5
10
J/C(2)
C-35
17
V
P
R-B
R-B
G
B
B
BR
16
V
3
8
2
1
9
6
4
12
3
COLUMN-ECU
COLUMN SWITCH
C-203
8
9
10
11
7
3
C-203-1
8
9
10
11
7
3
C-203-2
OFF
ON
(HI)
(LO)
(INT)
(MIST)
(WINDSHIELD WIPER SWITCH)
(WINDSHIELD WASHER SWITCH)
FAST
SLOW
(WINDSHIELD INTERMITTENT WIPER INTERVAL ADJUSTING KNOB)
6
6
C-14
MU801867
C-27
C-35
C-103
C-209
MU801857
C-210
MU801331
C-212
H4J13E00AB

WINDSHIELD WIPER AND WASHER <LHD> (CONTINUED)

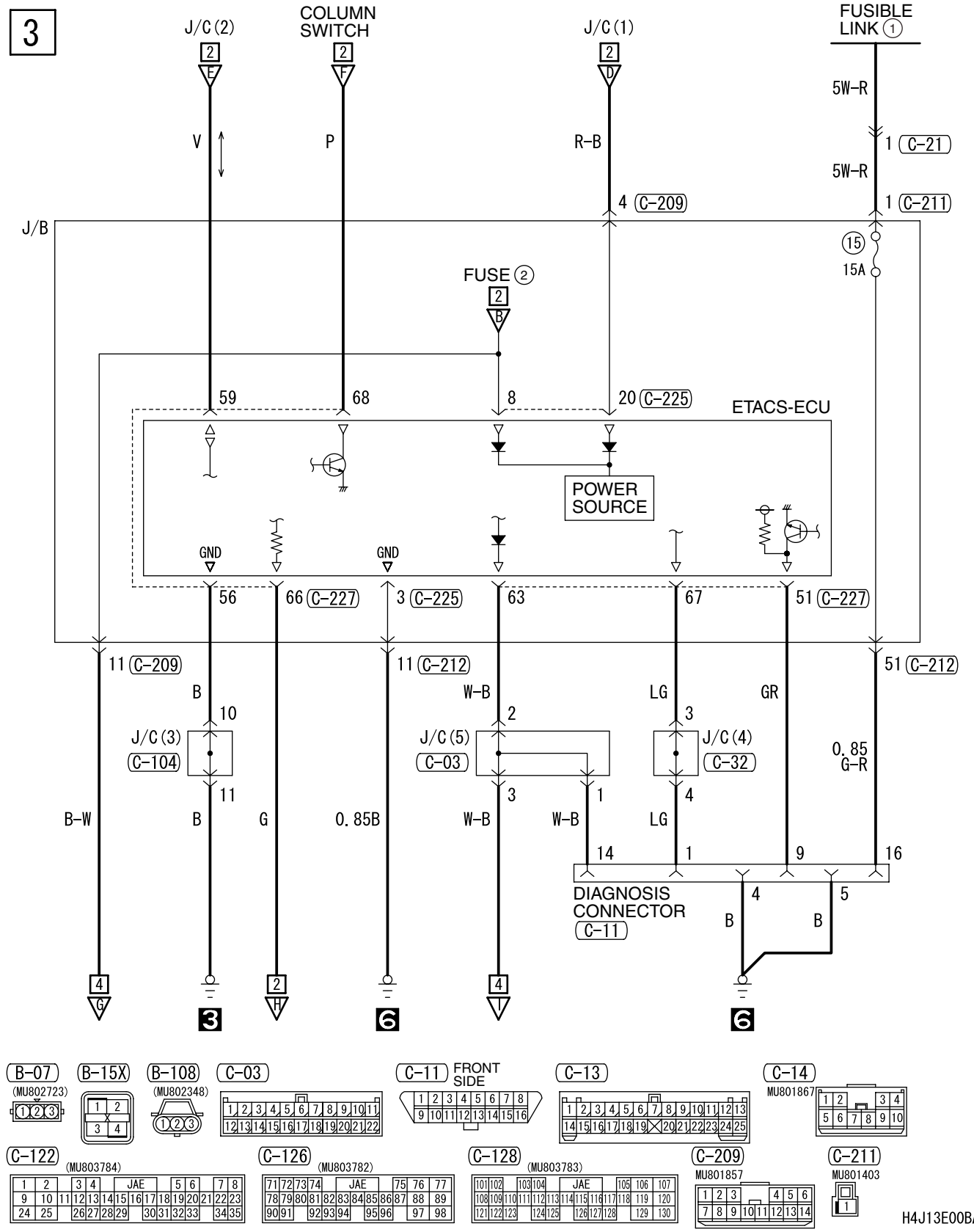

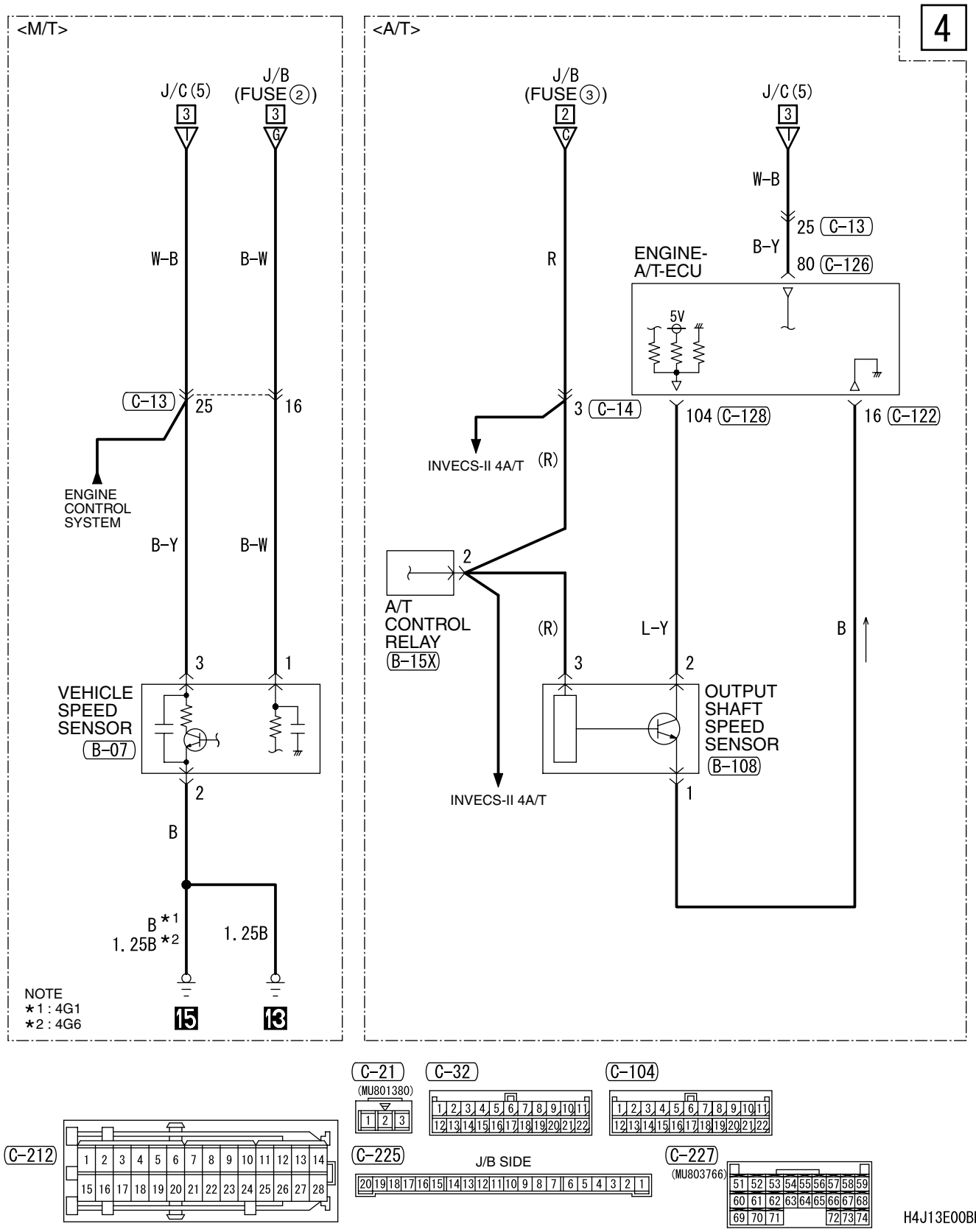
4
<M/T>
J/C (5)
3
I
J/B
(FUSE ②)
3
G
W-B
B-W
C-13
25
16
ENGINE
CONTROL
SYSTEM
B-Y
B-W
3
1
VEHICLE
SPEED
SENSOR
B-07
2
B
B *1
1.25B *2
1.25B
NOTE
*1 : 4G1
*2 : 4G6
15
13
<A/T>
J/B
(FUSE ③)
2
C
J/C (5)
3
I
W-B
25 C-13
B-Y
80 C-126
ENGINE-
A/T-ECU
5V
R
3 C-14
104 C-128
16 C-122
INVECS-II 4A/T
(R)
2
A/T
CONTROL
RELAY
B-15X
(R)
L-Y
B
3
2
OUTPUT
SHAFT
SPEED
SENSOR
B-108
INVECS-II 4A/T
1

C-21
(MU801380)
C-32
C-104
C-212
C-225
J/B SIDE
C-227
(MU803766)
H4J13E00BB

WINDSHIELD WIPER AND WASHER <RHD>

M1901006100616

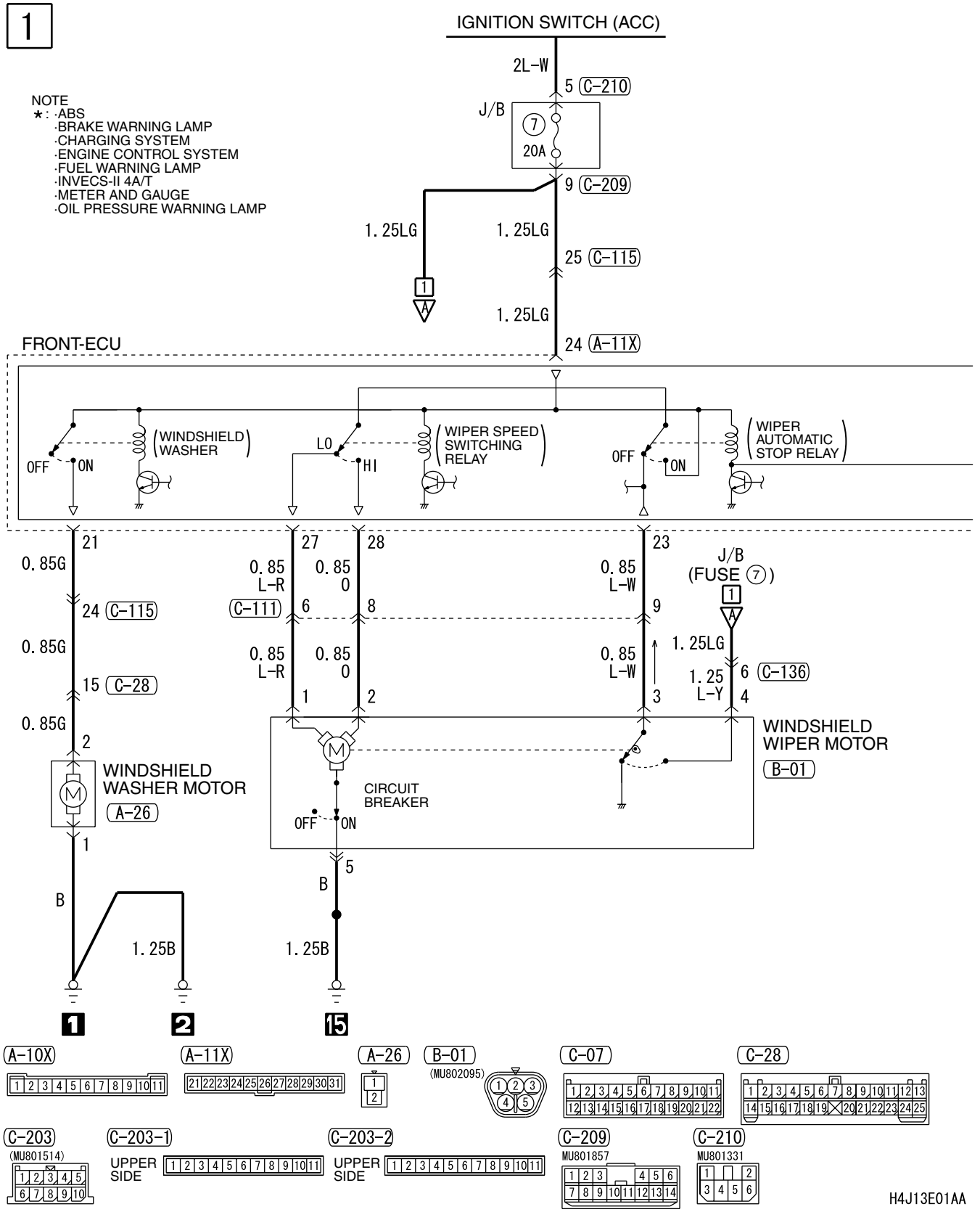

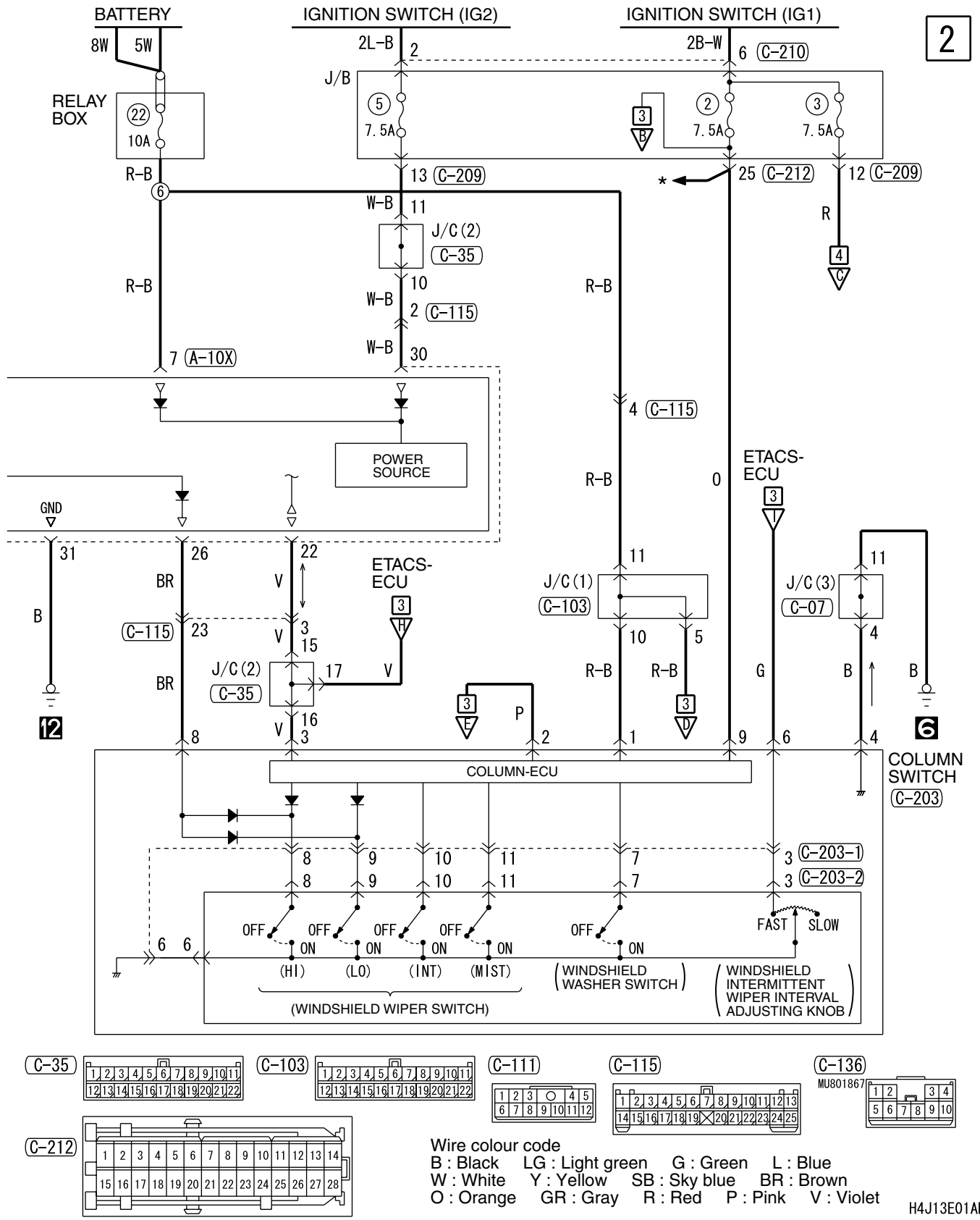
BATTERY
IGNITION SWITCH (IG2)
IGNITION SWITCH (IG1)
2
8W
5W
RELAY BOX
22
10A
2L-B
2
J/B
5
7.5A
2B-W
6
C-210
2
7.5A
3
7.5A
3
B
R-B
6
13
C-209
*
25
C-212
12
C-209
R
4
C
W-B
11
J/C (2)
C-35
10
W-B
2
C-115
W-B
30
R-B
R-B
7
A-10X
4
C-115
POWER SOURCE
R-B
0
ETACS-ECU
3
I
GND
31
26
22
BR
V
ETACS-ECU
3
H
11
J/C (1)
C-103
11
J/C (3)
C-07
B
C-115
23
V
3
15
10
5
4
J/C (2)
C-35
17
V
R-B
R-B
G
B
B
BR
3
E
P
3
D
12
V
16
3
8
2
1
9
6
4
6
COLUMN-ECU
COLUMN SWITCH
C-203
8
9
10
11
7
3
C-203-1
8
9
10
11
7
3
C-203-2
OFF
OFF
OFF
OFF
OFF
FAST
SLOW
6
6
ON
ON
ON
ON
ON
(HI)
(LO)
(INT)
(MIST)
(WINDSHIELD WIPER SWITCH)
(WINDSHIELD WASHER SWITCH)
(WINDSHIELD INTERMITTENT WIPER INTERVAL ADJUSTING KNOB)
C-35
C-103
C-111
C-115
C-136
MU801867
C-212
Wire colour code
B : Black LG : Light green G : Green L : Blue
W : White Y : Yellow SB : Sky blue BR : Brown
O : Orange GR : Gray R : Red P : Pink V : Violet
H4J13E01AB

WINDSHIELD WIPER AND WASHER <RHD> (CONTINUED)

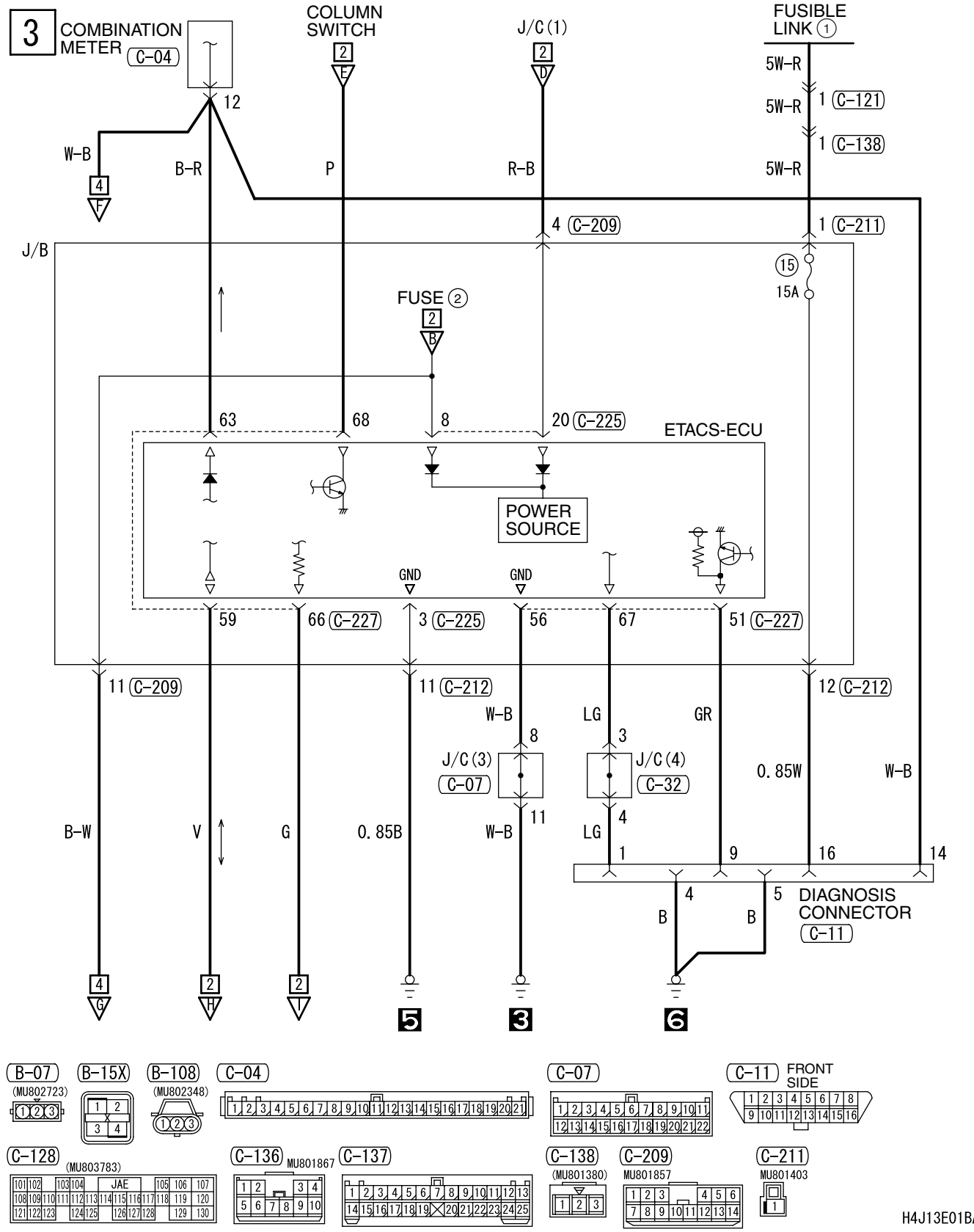

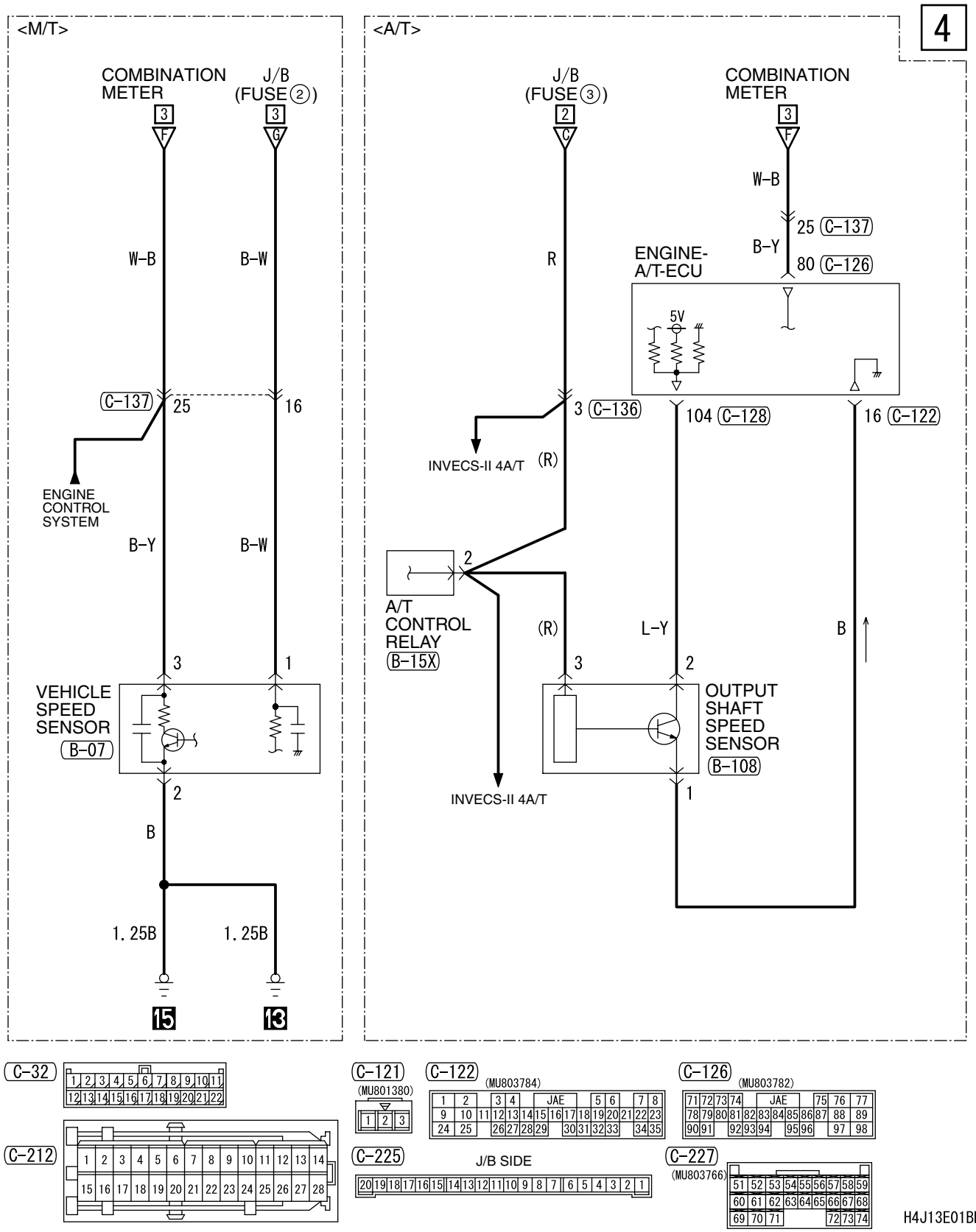
4
<M/T>
COMBINATION METER
J/B (FUSE②)
3 F
3 G
W-B
B-W
C-137
25
16
ENGINE CONTROL SYSTEM
B-Y
B-W
3
1
VEHICLE SPEED SENSOR
B-07
2
B
1.25B
1.25B
15
13
<A/T>
J/B (FUSE③)
2 C
COMBINATION METER
3 F
W-B
25 C-137
B-Y
80 C-126
R
ENGINE-A/T-ECU
5V
3 C-136
104 C-128
16 C-122
INVECS-II 4A/T
(R)
2
A/T CONTROL RELAY
B-15X
(R)
L-Y
B
3
2
OUTPUT SHAFT SPEED SENSOR
B-108
INVECS-II 4A/T
1
C-32
C-212
C-121
(MU801380)
C-122
(MU803784)
JAE
C-126
(MU803782)
JAE
C-225
J/B SIDE
C-227
(MU803766)
H4J13E01BB

REAR WIPER AND WASHER <LHD>

M1901006200538

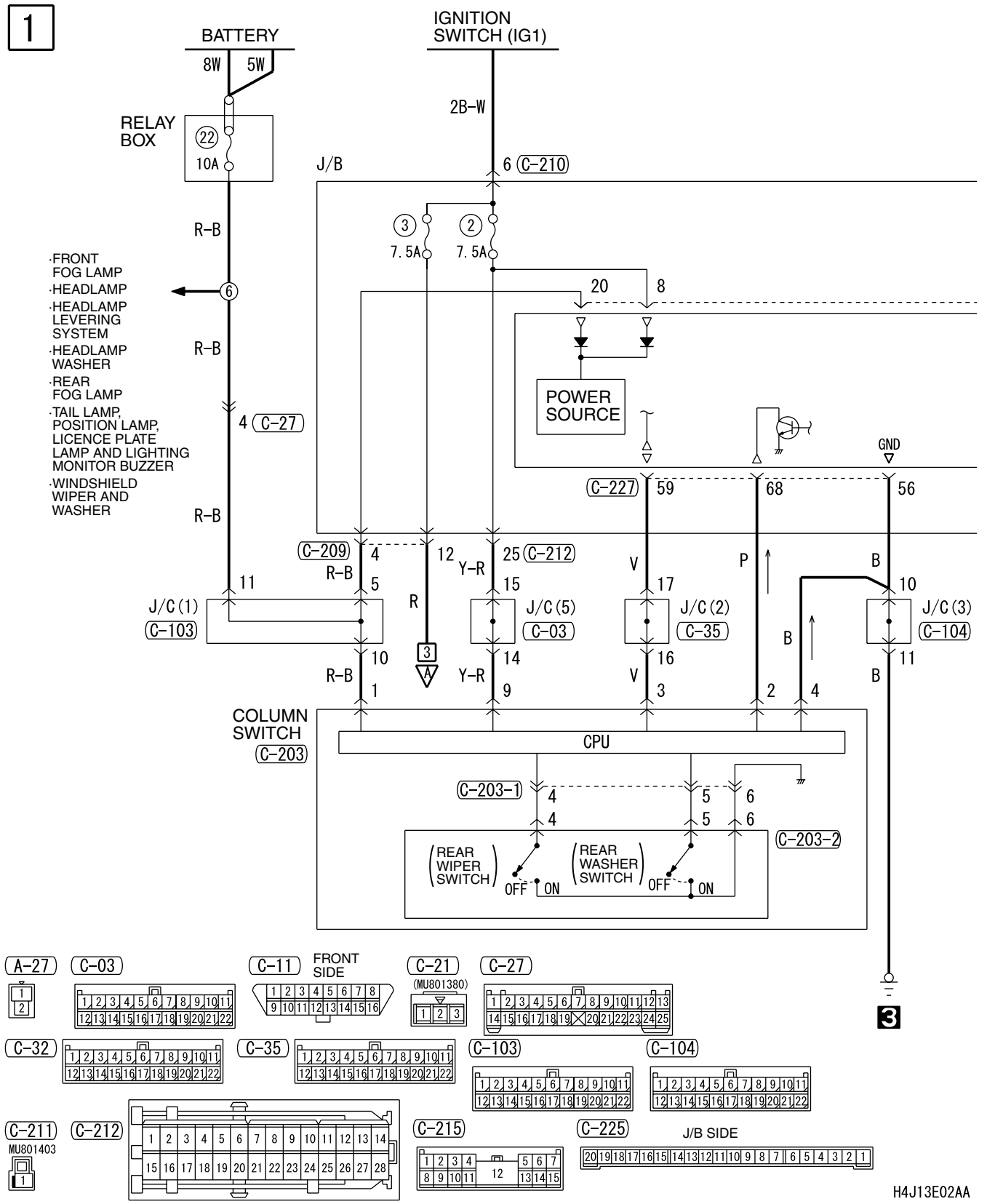

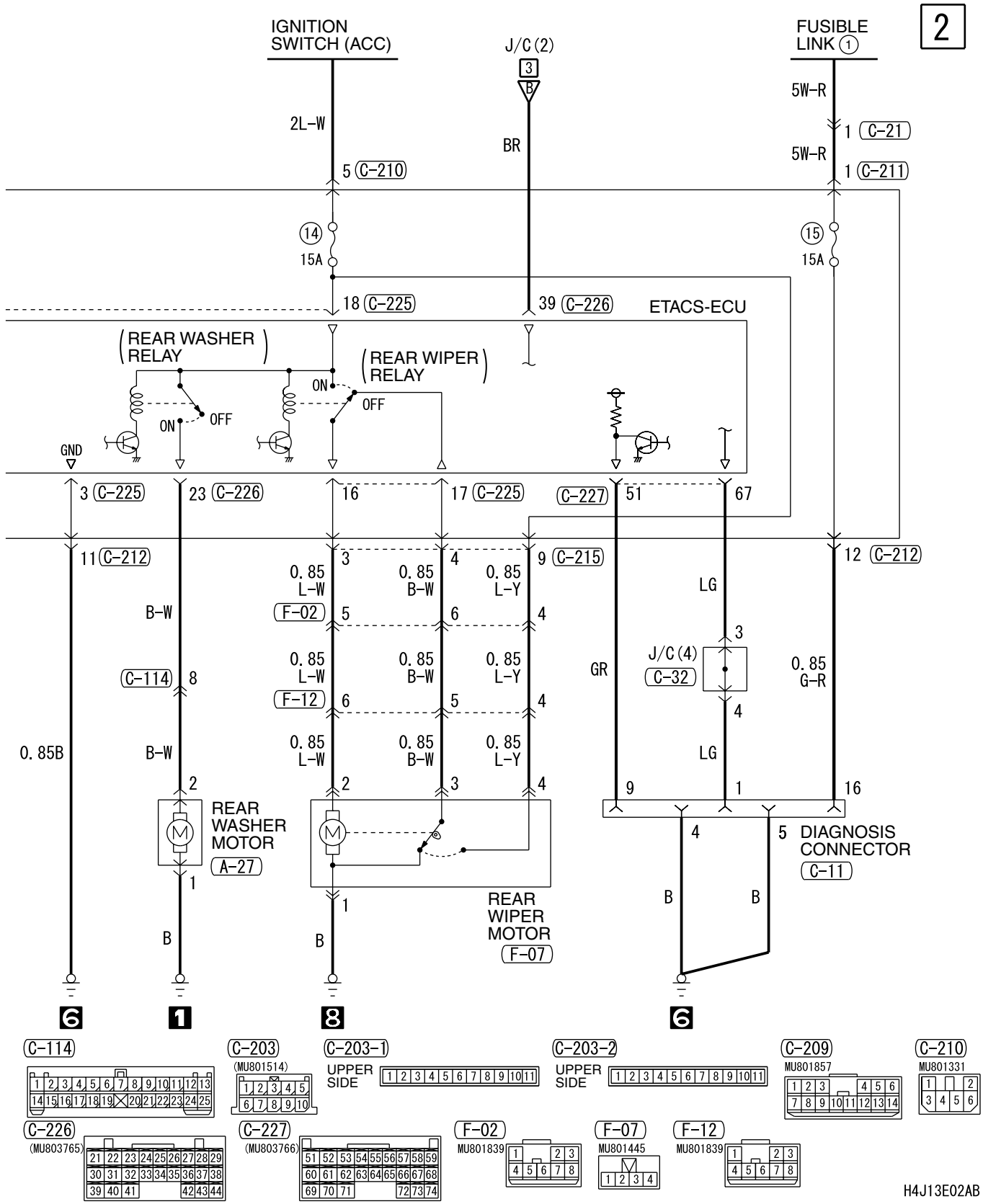
2
IGNITION SWITCH (ACC)
J/C (2)
FUSIBLE LINK (1)
2L-W
BR
5W-R
5W-R
5 (C-210)
1 (C-21)
1 (C-211)
(14)
15A
(15)
15A
18 (C-225)
39 (C-226)
ETACS-ECU
(REAR WASHER RELAY)
(REAR WIPER RELAY)
ON
OFF
ON
OFF
GND
3 (C-225)
23 (C-226)
16
17 (C-225)
(C-227) 51
67
11 (C-212)
9 (C-215)
12 (C-212)
0.85 L-W
0.85 B-W
0.85 L-Y
LG
B-W
(F-02)
J/C (4)
(C-32)
0.85 G-R
GR
(C-114)
(F-12)
0.85B
B-W
LG
REAR WASHER MOTOR
(A-27)
REAR WIPER MOTOR
(F-07)
DIAGNOSIS CONNECTOR
(C-11)
B
6
1
8
6
(C-114)
(C-203)
(MU801514)
(C-203-1)
UPPER SIDE
(C-203-2)
UPPER SIDE
(C-209)
MU801857
(C-210)
MU801331
(C-226)
(MU803765)
(C-227)
(MU803766)
(F-02)
MU801839
(F-07)
MU801445
(F-12)
MU801839
H4J13E02AB

REAR WIPER AND WASHER <LHD> (CONTINUED)

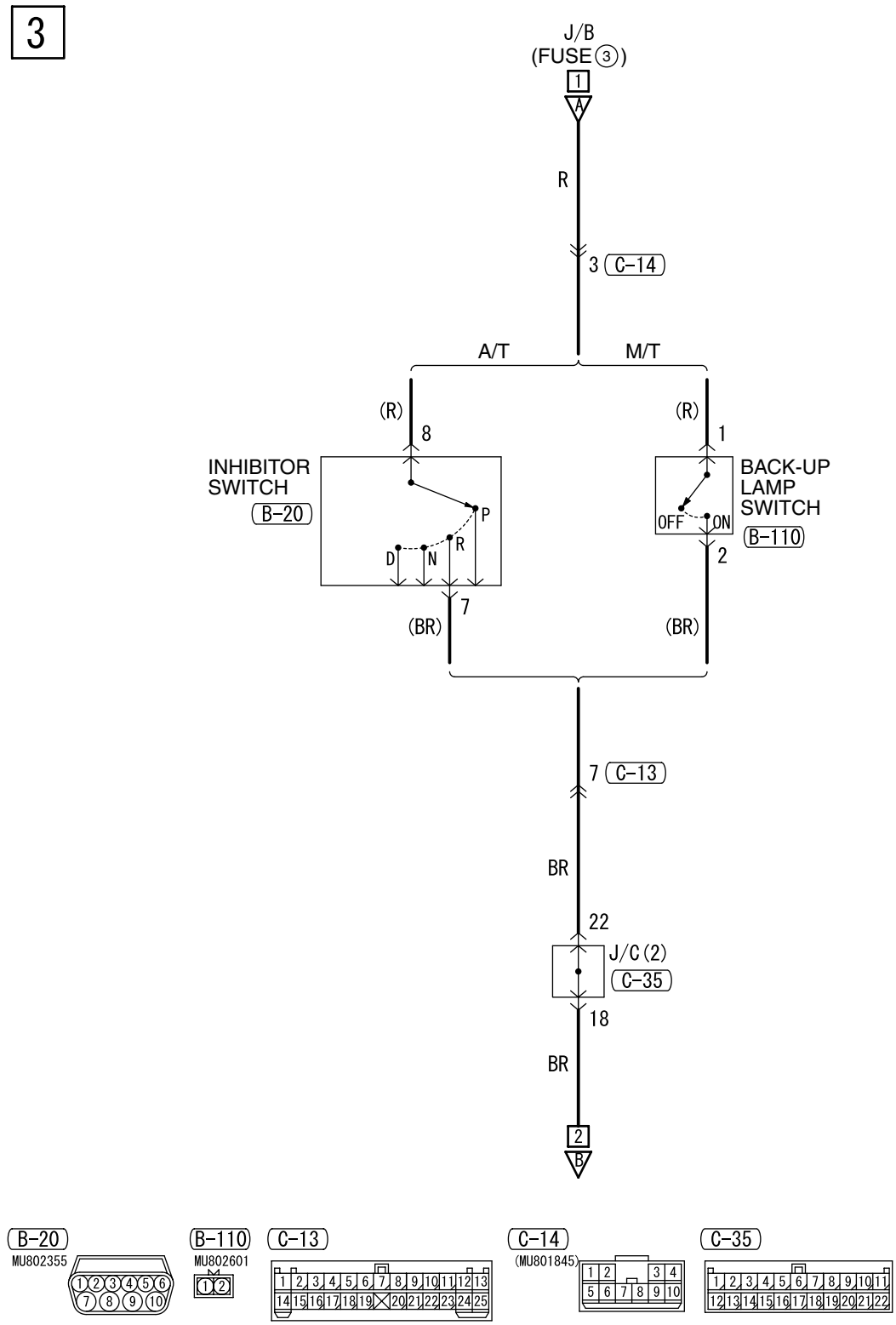

Wire colour code
B : Black LG : Light green G : Green L : Blue W : White Y : Yellow SB : Sky blue
BR : Brown O : Orange GR : Gray R : Red P : Pink V : Violet

H4J13E02BA

NOTES

REAR WIPER AND WASHER <RHD>

M1901006200549

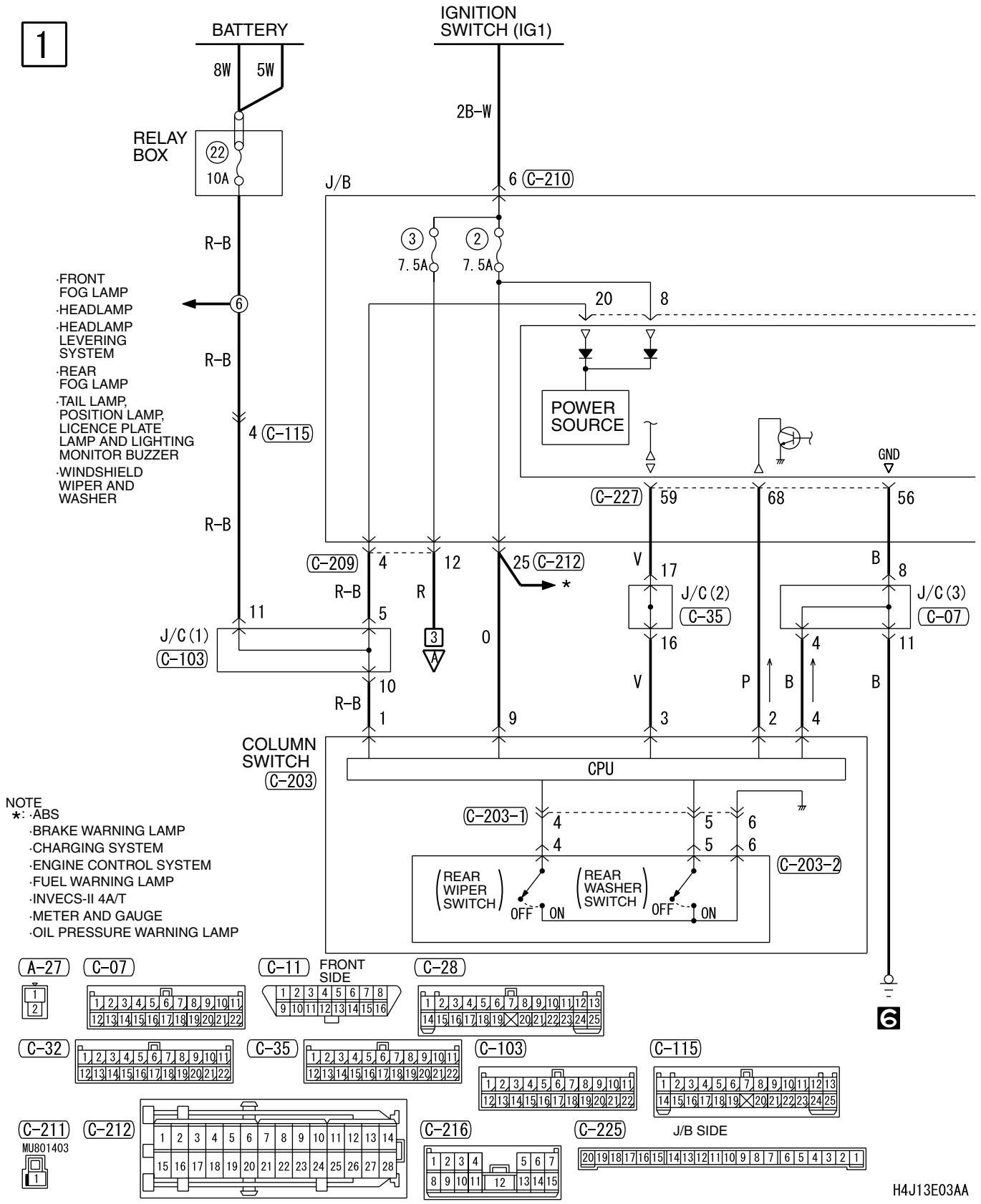

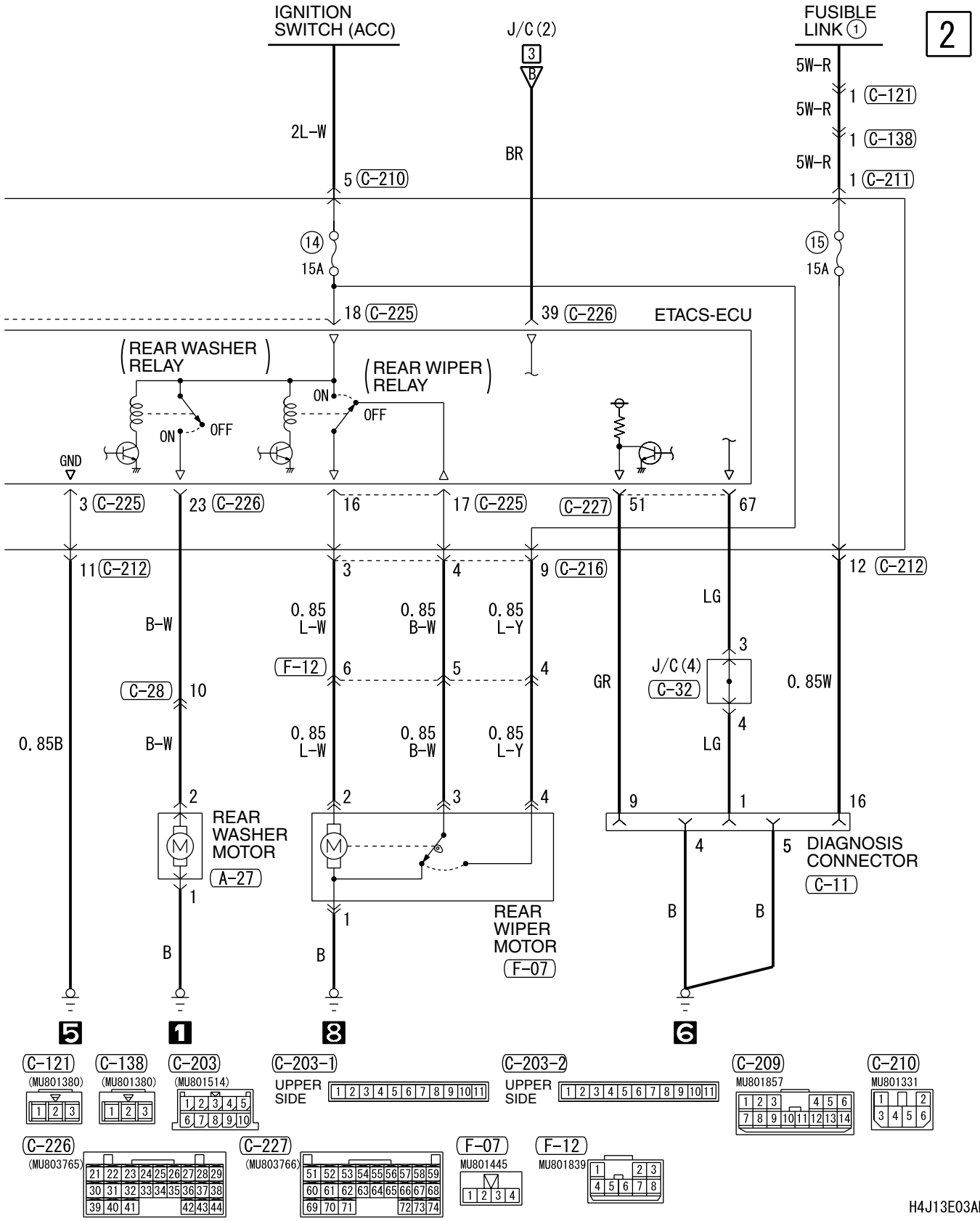
IGNITION SWITCH (ACC)
J/C (2)
FUSIBLE LINK (1)
2
5W-R
1 (C-121)
5W-R
1 (C-138)
5W-R
1 (C-211)
2L-W
BR
5 (C-210)
(14)
15A
(15)
15A
18 (C-225)
39 (C-226)
ETACS-ECU
REAR WASHER RELAY
REAR WIPER RELAY
ON
OFF
ON
OFF
GND
3 (C-225)
23 (C-226)
16
17 (C-225)
(C-227)
51
67
11 (C-212)
3
4
9 (C-216)
12 (C-212)
B-W
0.85 L-W
0.85 B-W
0.85 L-Y
LG
(F-12)
6
5
4
3
J/C (4)
(C-32)
GR
0.85W
(C-28)
10
4
0.85B
B-W
0.85 L-W
0.85 B-W
0.85 L-Y
LG
2
2
3
4
9
1
16
REAR WASHER MOTOR
(A-27)
4
5
DIAGNOSIS CONNECTOR
(C-11)
1
1
B
B
B
B
REAR WIPER MOTOR
(F-07)
5
1
8
6
(C-121)
(MU801380)
(C-138)
(MU801380)
(C-203)
(MU801514)
(C-203-1)
UPPER SIDE
(C-203-2)
UPPER SIDE
(C-209)
MU801857
(C-210)
MU801331
(C-226)
(MU803765)
(C-227)
(MU803766)
(F-07)
MU801445
(F-12)
MU801839
H4J13E03AB

REAR WIPER AND WASHER <RHD> (CONTINUED)

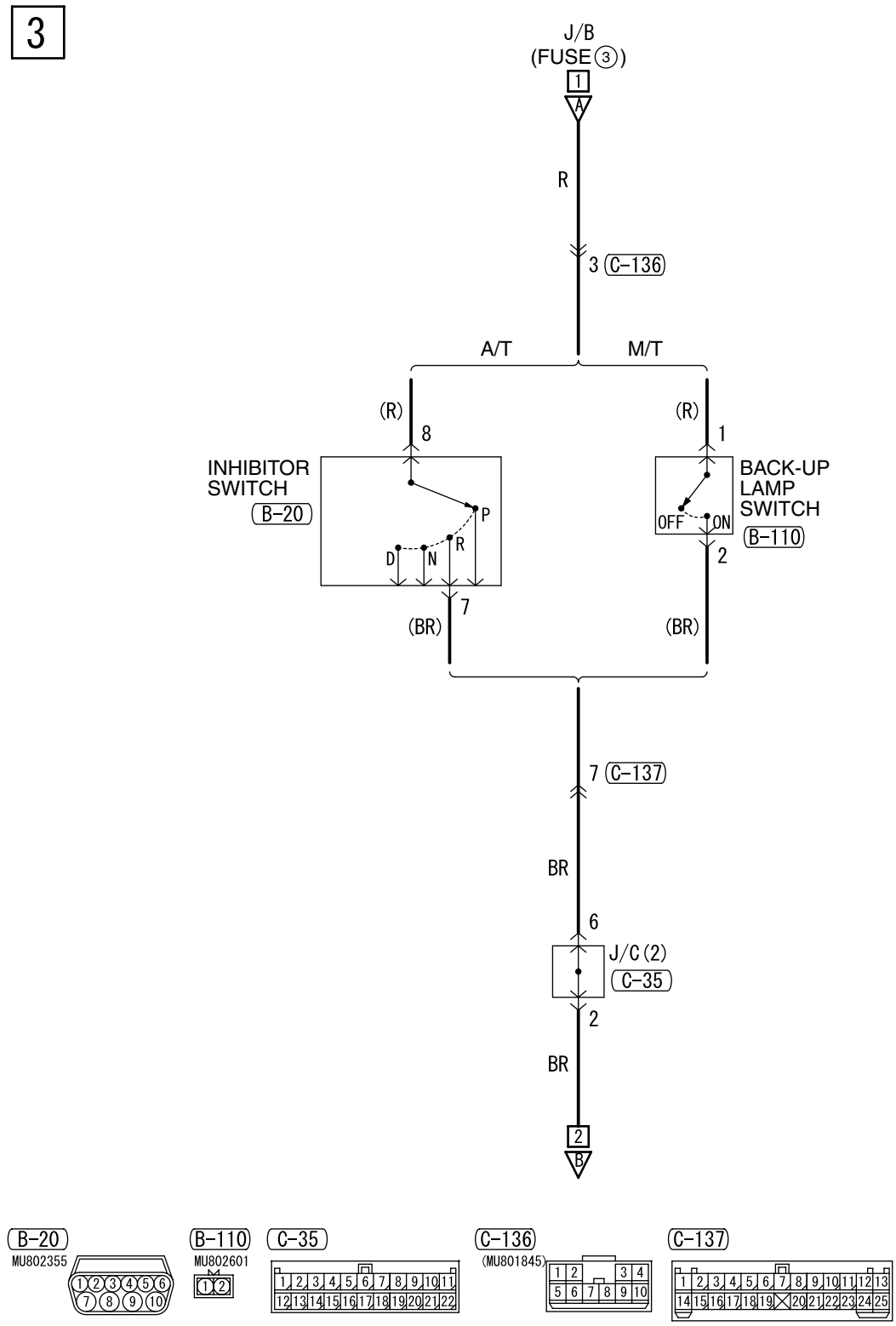

Wire colour code
B : Black LG : Light green G : Green L : Blue W : White Y : Yellow SB : Sky blue
BR : Brown O : Orange GR : Gray R : Red P : Pink V : Violet

H4J13E03BA

NOTES

REAR WINDOW DEFOGGER AND DOOR MIRROR HEATER <LHD>

M1901013500478

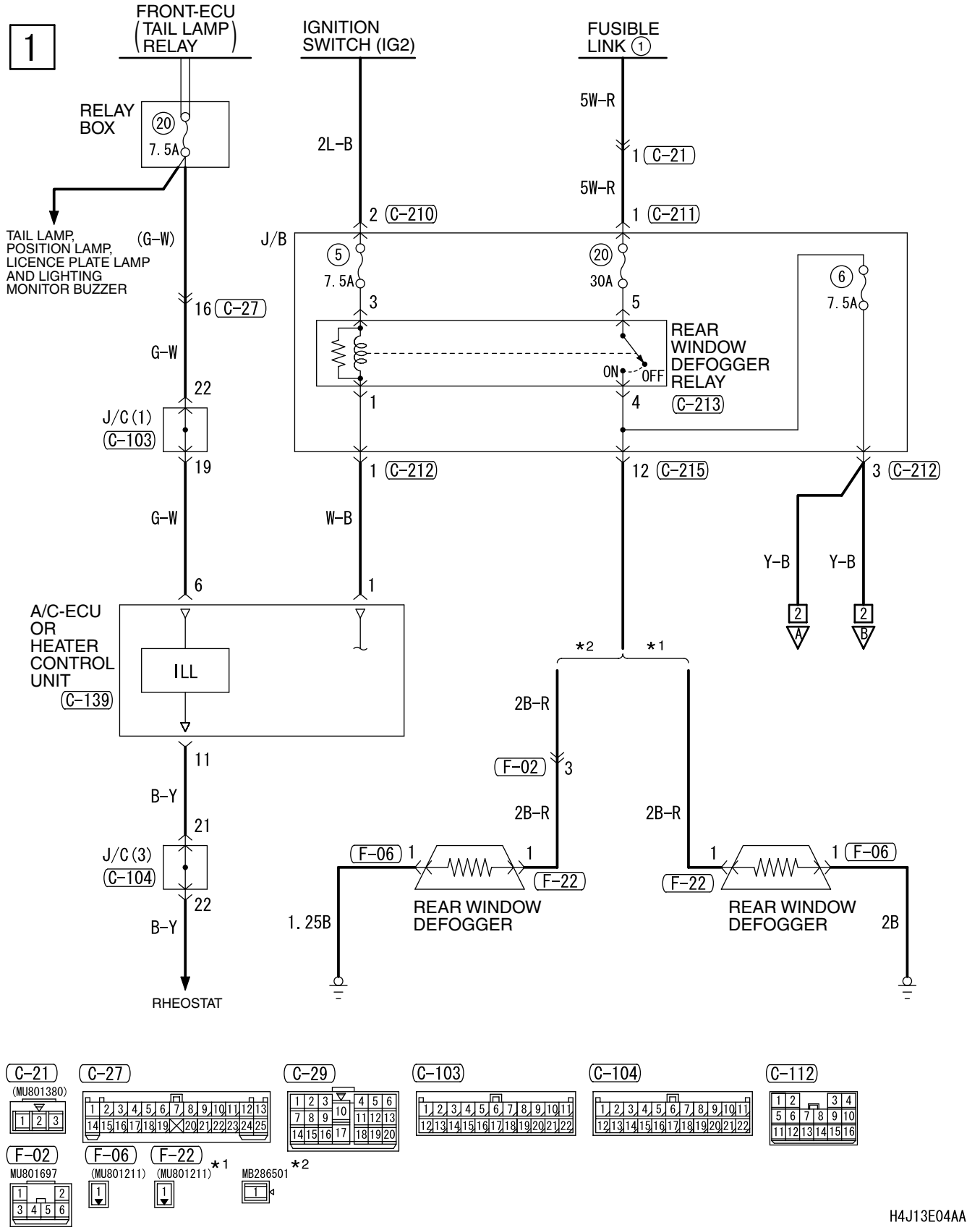

2

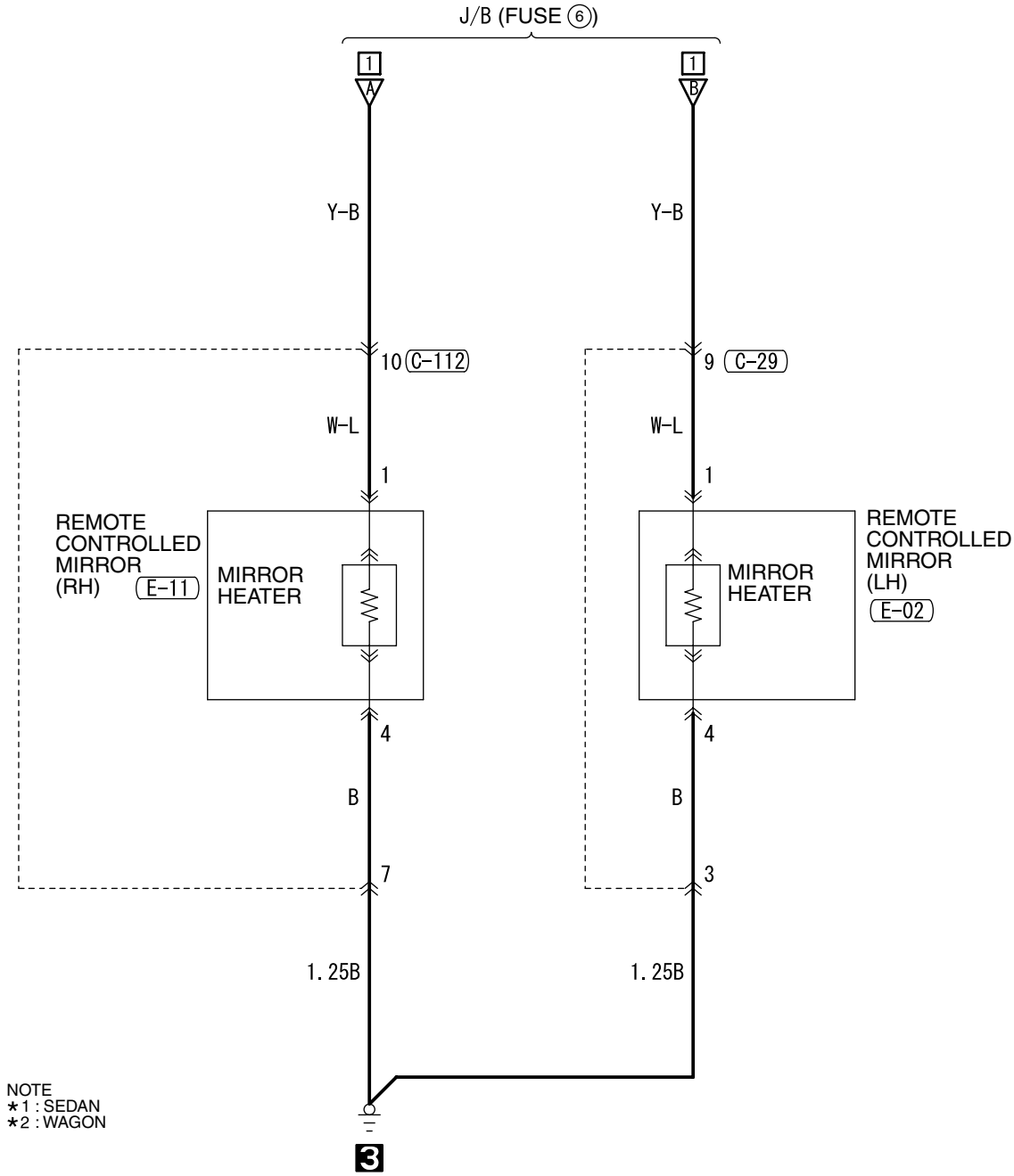

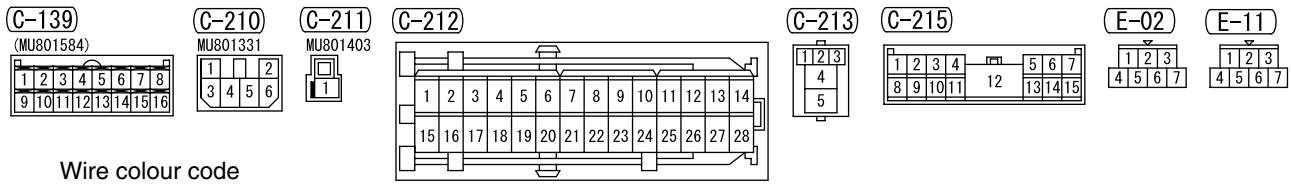

Wire colour code
B : Black LG : Light green G : Green L : Blue W : White Y : Yellow SB : Sky blue
BR : Brown O : Orange GR : Gray R : Red P : Pink V : Violet

H4J13E04AB

REAR WINDOW DEFOGGER AND DOOR MIRROR HEATER <RHD>

M1901013500489

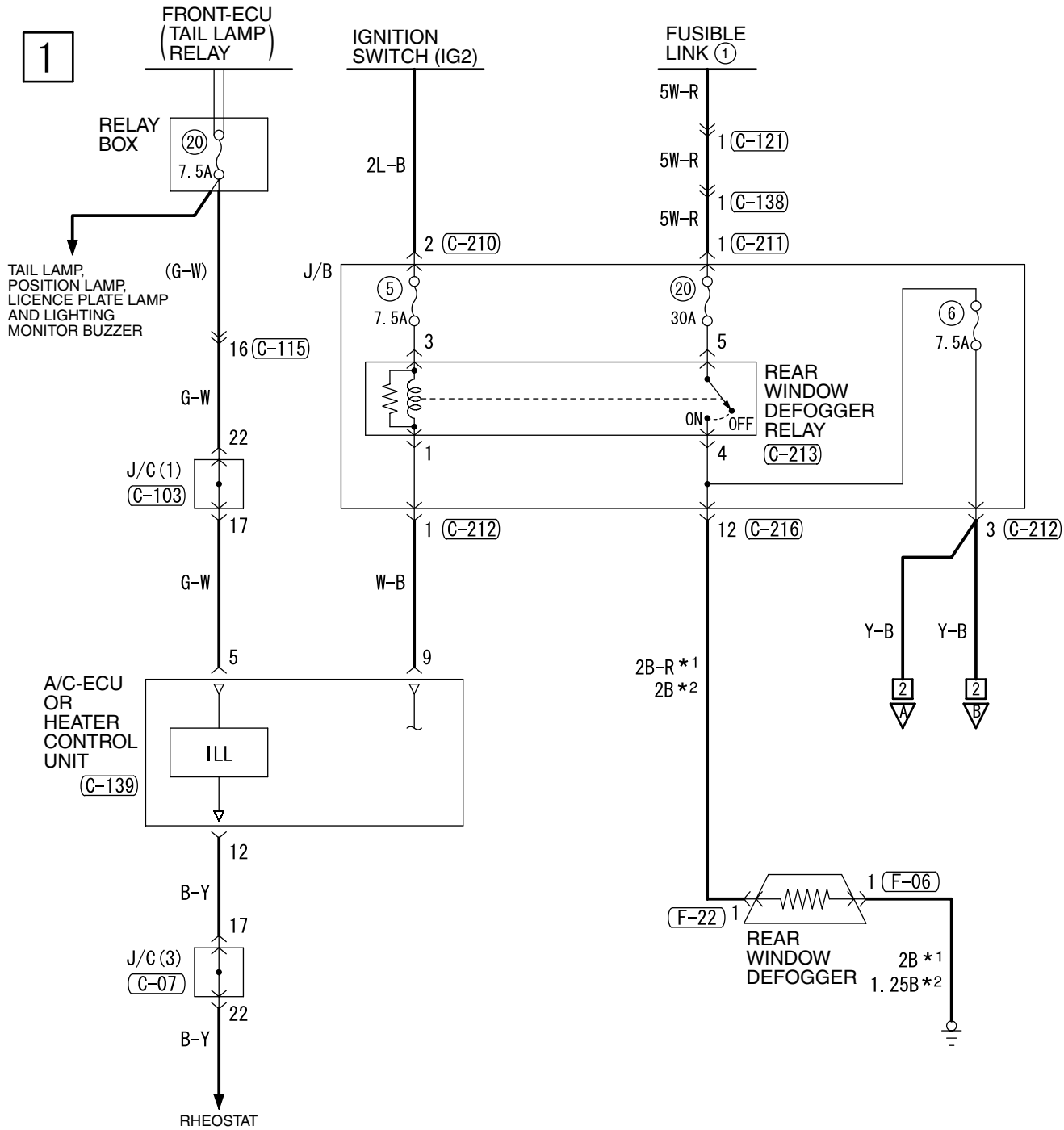

H4J13E05AA

2

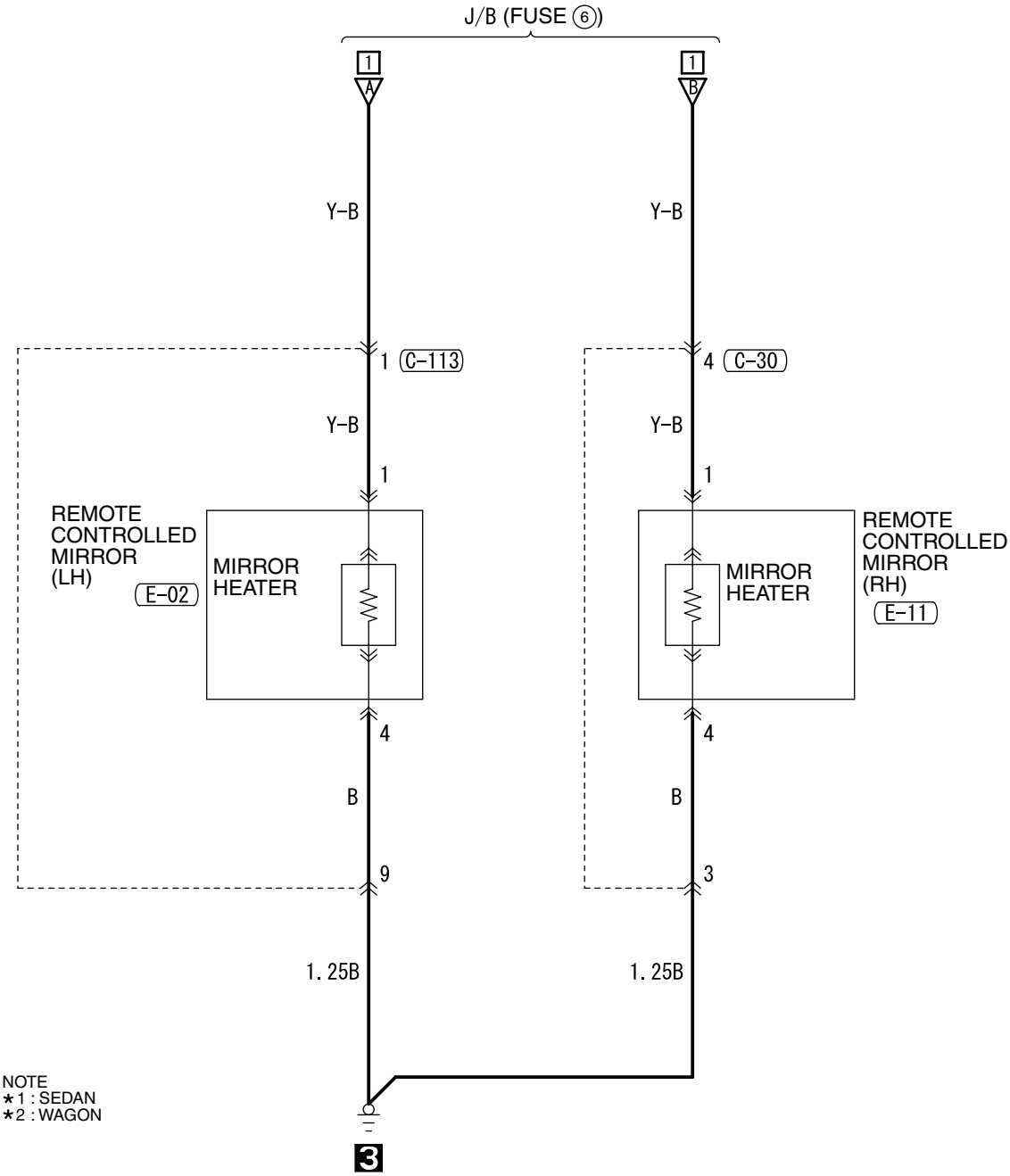

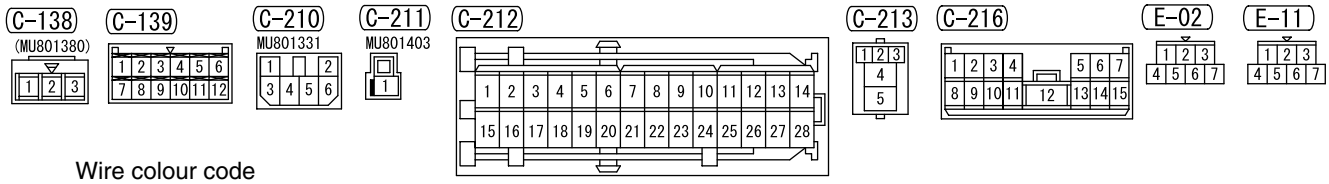

Wire colour code
B : Black LG : Light green G : Green L : Blue W : White Y : Yellow SB : Sky blue
BR : Brown O : Orange GR : Gray R : Red P : Pink V : Violet

H4J13E05AB

REMOTE CONTROLLED MIRROR <LHD>

M1901018800010

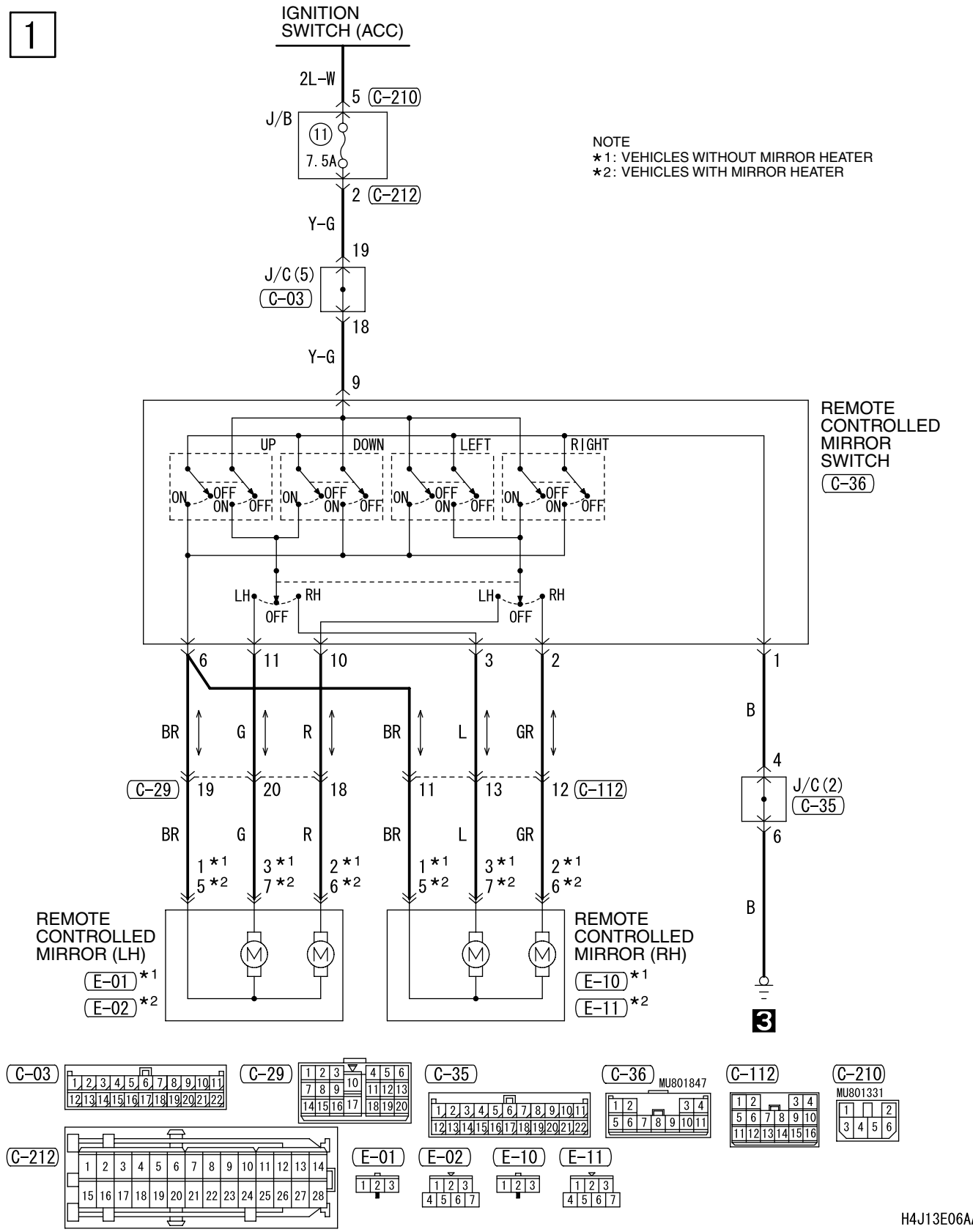

REMOTE CONTROLLED MIRROR <RHD>

M1901018800021

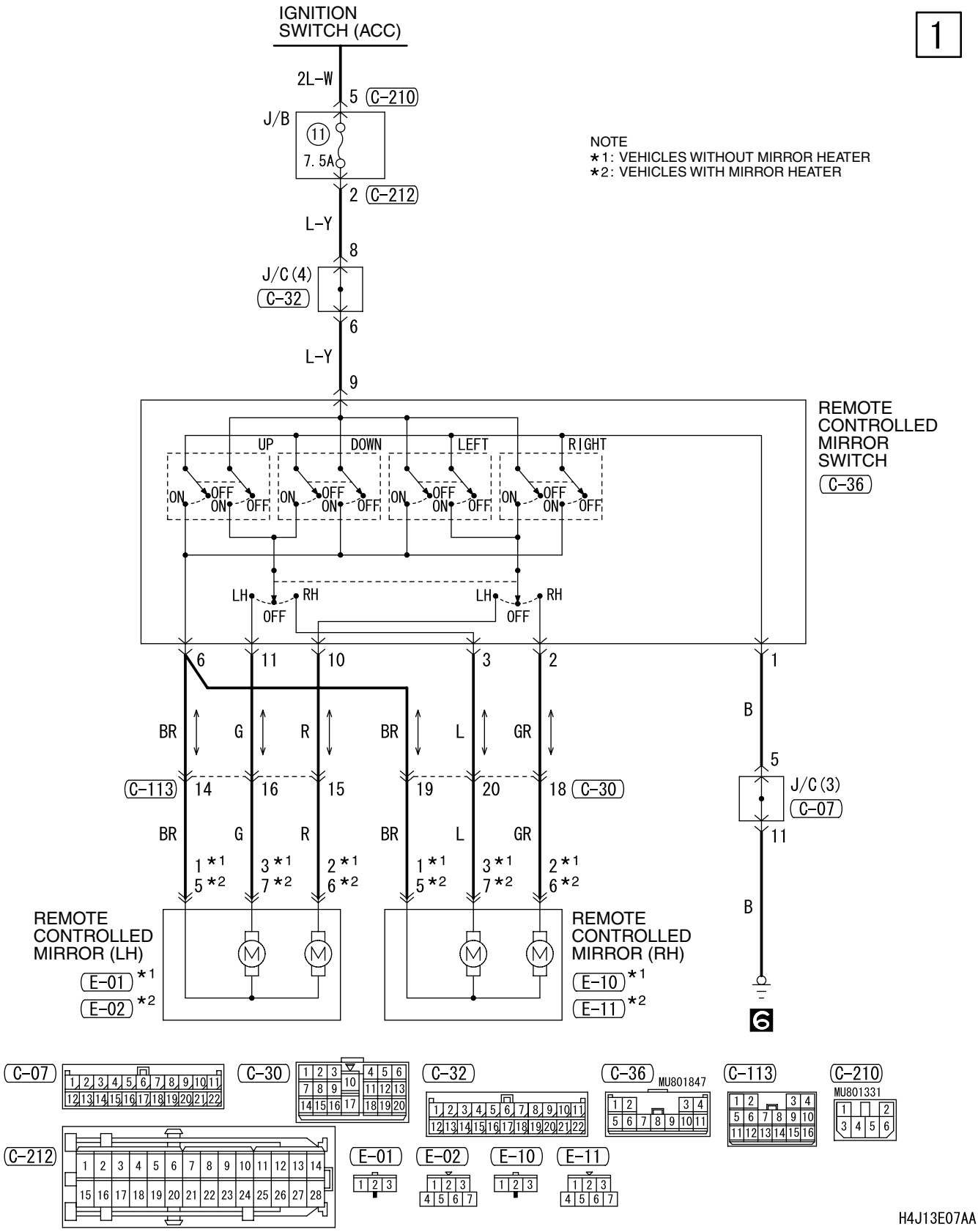

HEADLAMP WASHER

M1901018900017

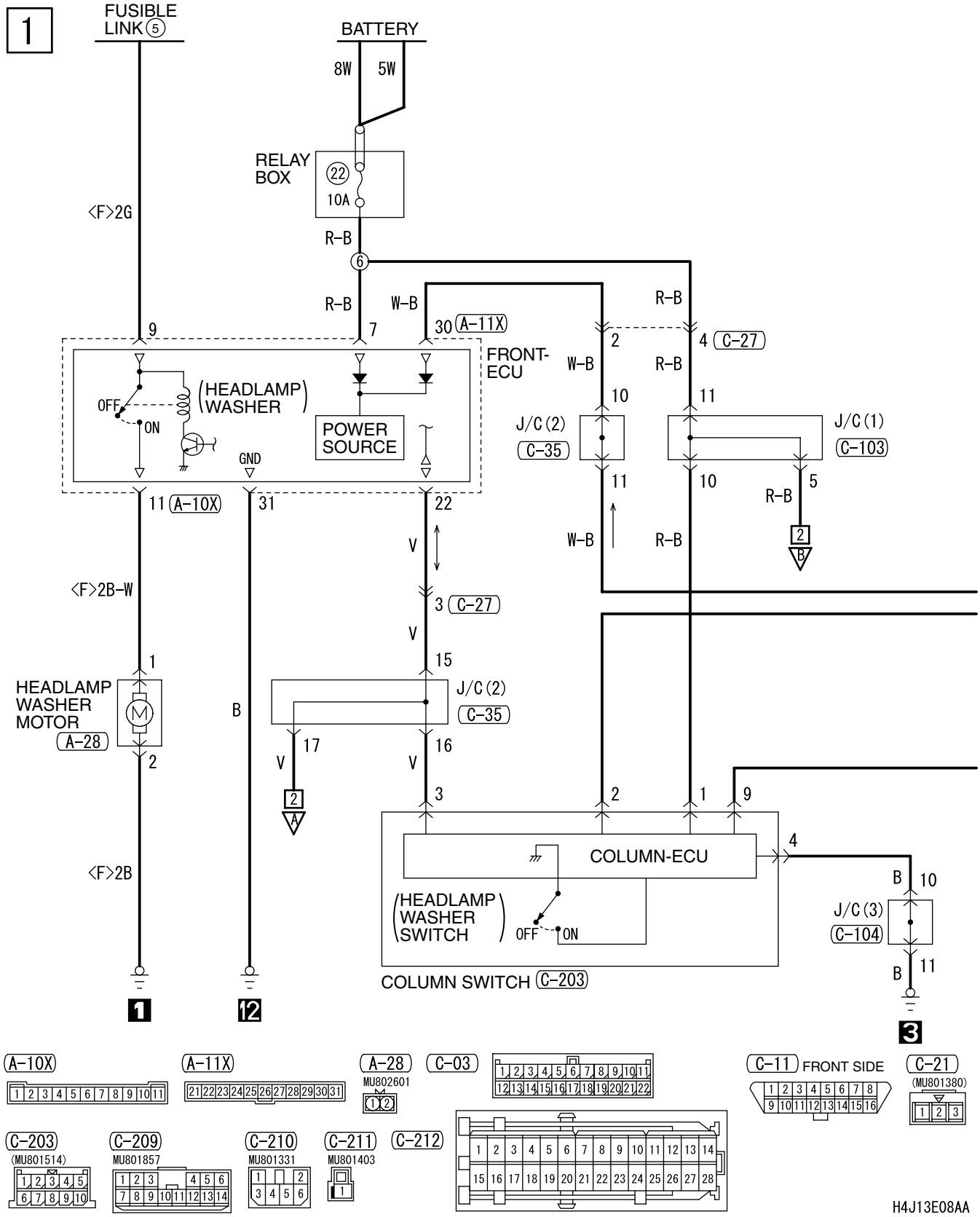

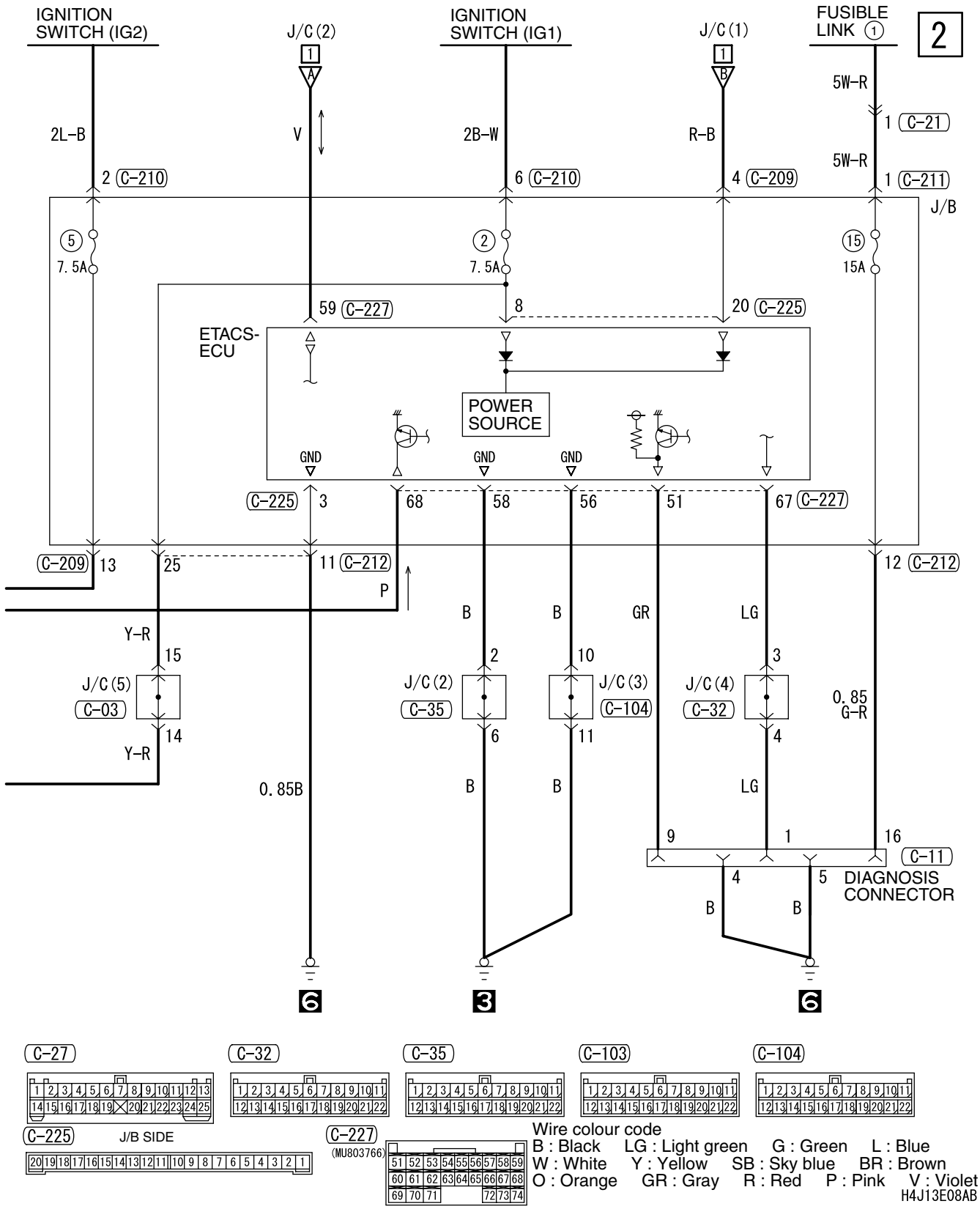
IGNITION SWITCH (IG2)
J/C (2)
IGNITION SWITCH (IG1)
J/C (1)
FUSIBLE LINK (1)
2
2L-B
V
2B-W
R-B
5W-R
1 (C-21)
5W-R
2 (C-210)
6 (C-210)
4 (C-209)
1 (C-211)
J/B
(5) 7.5A
(2) 7.5A
(15) 15A
59 (C-227)
8
20 (C-225)
ETACS-ECU
POWER SOURCE
GND
GND
GND
(C-225) 3
68
58
56
51
67 (C-227)
(C-209) 13
25
11 (C-212)
12 (C-212)
P
B
B
GR
LG
Y-R
15
2
10
3
J/C (5)
(C-03)
J/C (2)
(C-35)
J/C (3)
(C-104)
J/C (4)
(C-32)
0.85 G-R
14
6
11
4
Y-R
0.85B
B
B
LG
9
1
16
(C-11)
4
5
DIAGNOSIS CONNECTOR
B
B
6
3
6
(C-27)
(C-32)
(C-35)
(C-103)
(C-104)
(C-225)
J/B SIDE
(C-227)
(MU803766)
Wire colour code
B : Black LG : Light green G : Green L : Blue
W : White Y : Yellow SB : Sky blue BR : Brown
O : Orange GR : Gray R : Red P : Pink V : Violet
H4J13E08AB

SPARE CONNECTOR (FOR AUDIO) <LHD>

M1901019000017

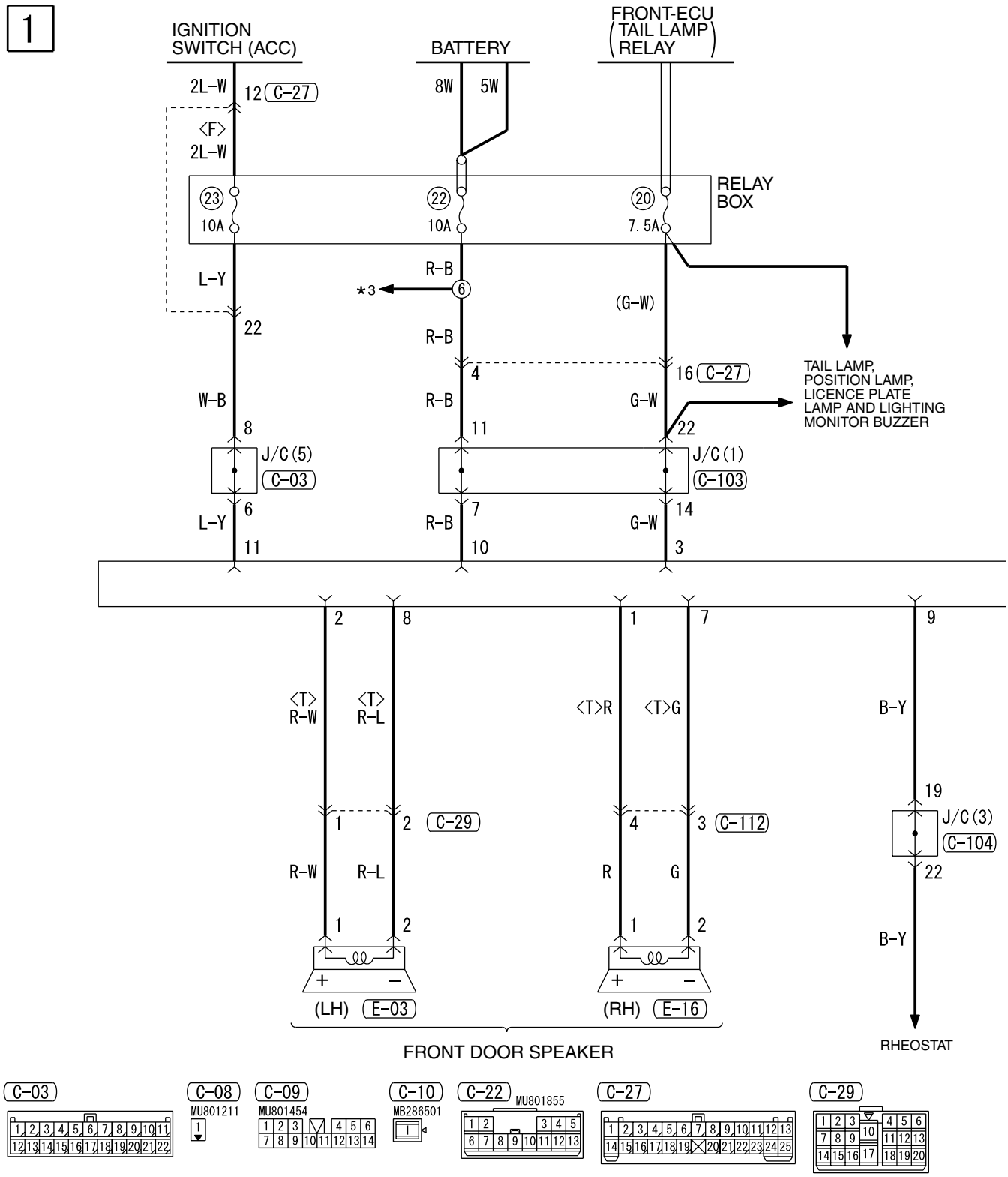

H4J14E00AA

2

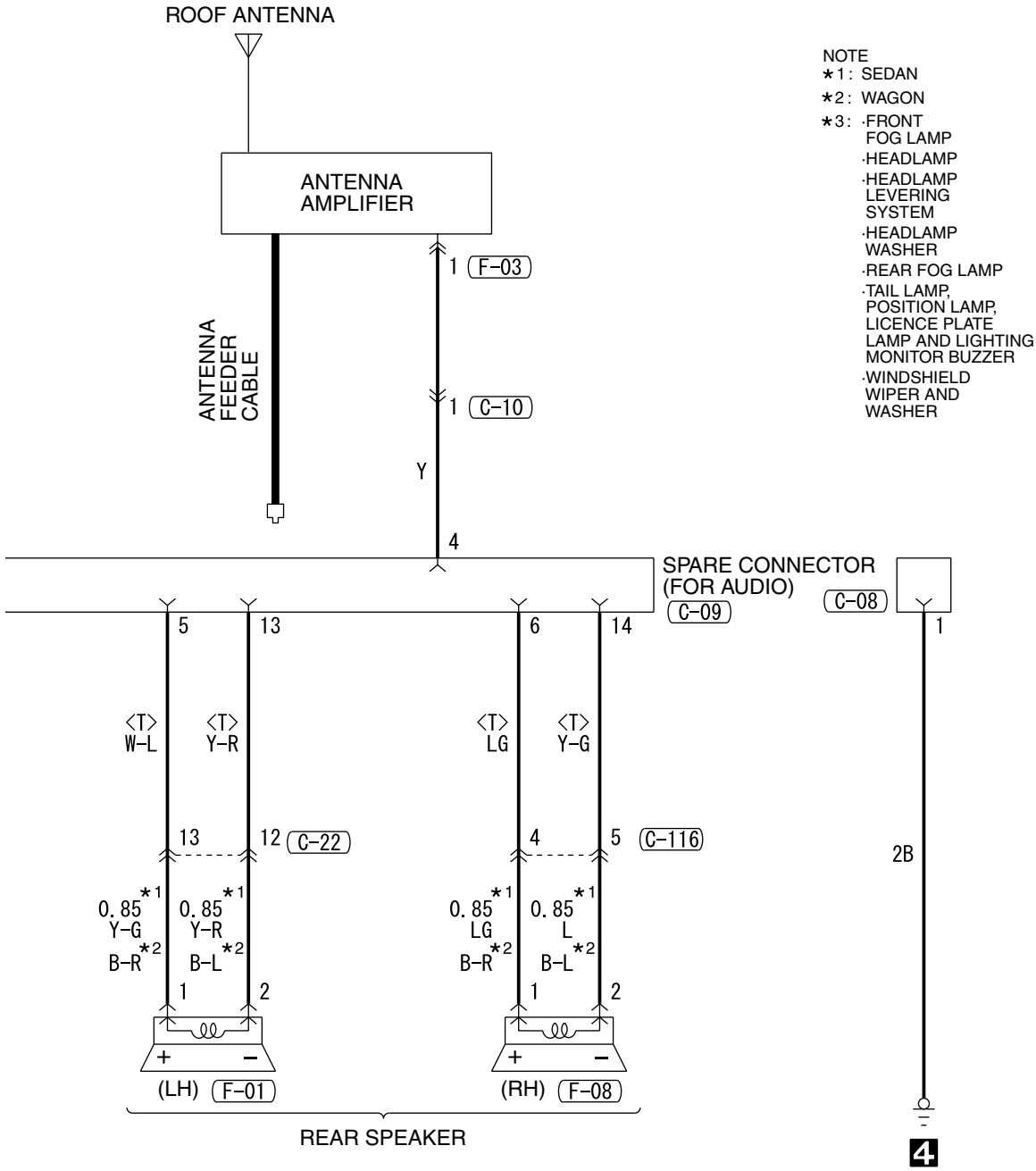

NOTE
*1: SEDAN
*2: WAGON
*3: ·FRONT FOG LAMP
·HEADLAMP
·HEADLAMP LEVERING SYSTEM
·HEADLAMP WASHER
·REAR FOG LAMP
·TAIL LAMP, POSITION LAMP, LICENCE PLATE LAMP AND LIGHTING MONITOR BUZZER
·WINDSHIELD WIPER AND WASHER

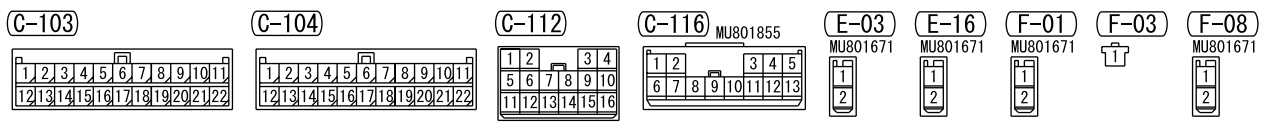

Wire colour code
B : Black LG : Light green G : Green L : Blue W : White Y : Yellow SB : Sky blue
BR : Brown O : Orange GR : Gray R : Red P : Pink V : Violet

H4J14E00AB

SPARE CONNECTOR (FOR AUDIO) <RHD>

M1901019000028

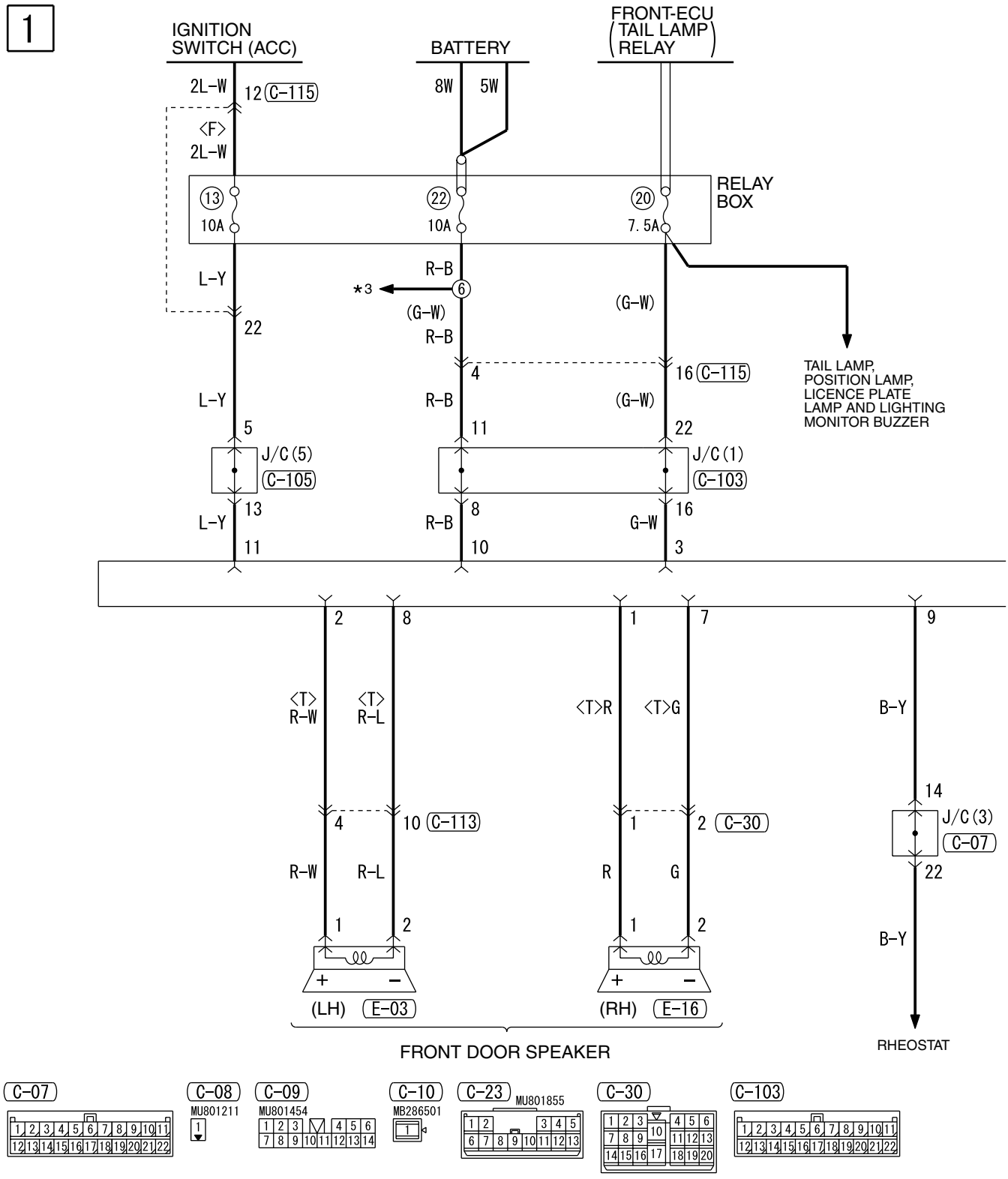

H4J14E01AA

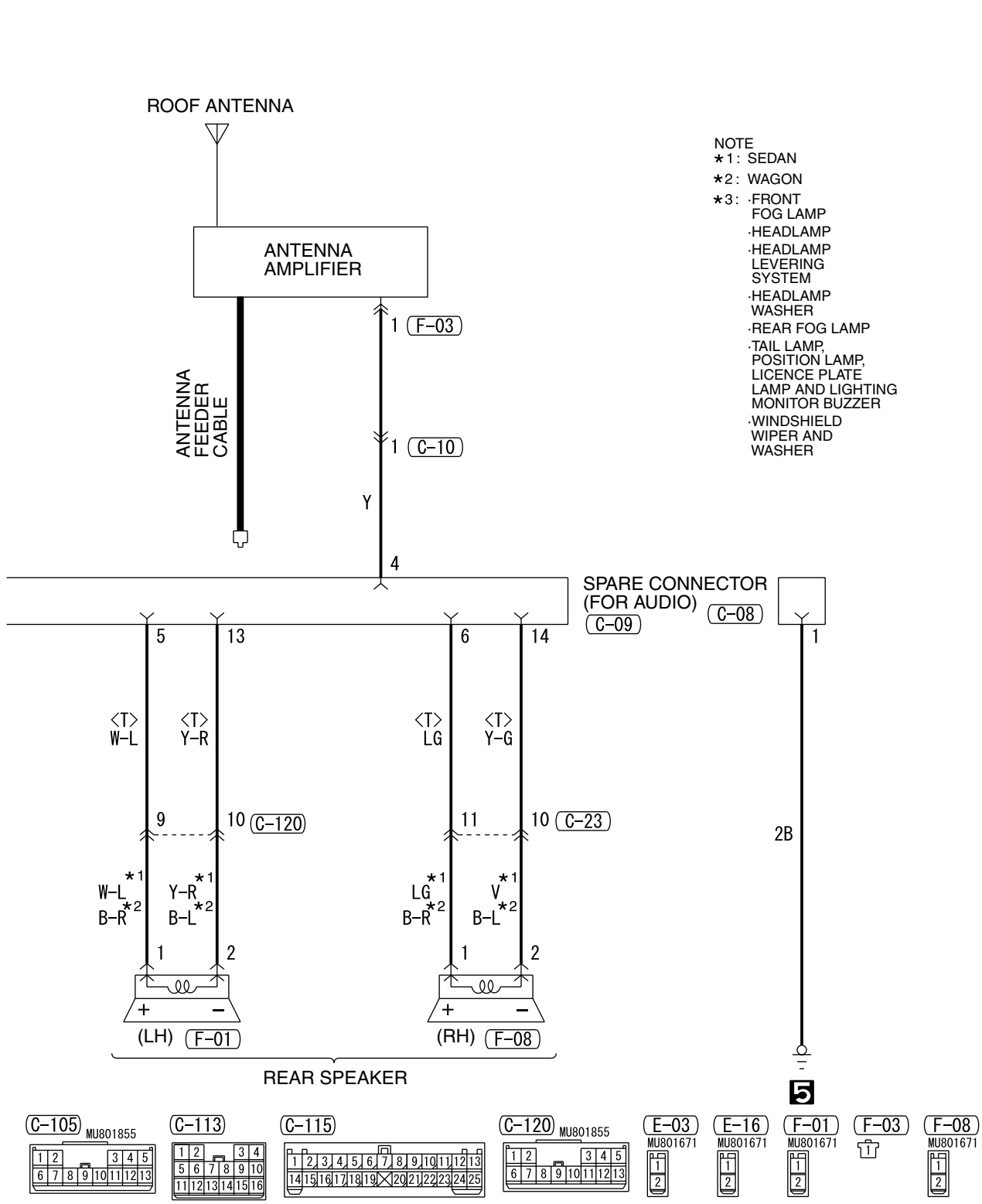

NOTE
*1: SEDAN
*2: WAGON
*3: ·FRONT FOG LAMP
·HEADLAMP
·HEADLAMP LEVERING SYSTEM
·HEADLAMP WASHER
·REAR FOG LAMP
·TAIL LAMP, POSITION LAMP, LICENCE PLATE LAMP AND LIGHTING MONITOR BUZZER
·WINDSHIELD WIPER AND WASHER

Wire colour code
B : Black LG : Light green G : Green L : Blue W : White Y : Yellow SB : Sky blue
BR : Brown O : Orange GR : Gray R : Red P : Pink V : Violet

H4J14E01AB

CLOCK

M1901007700343

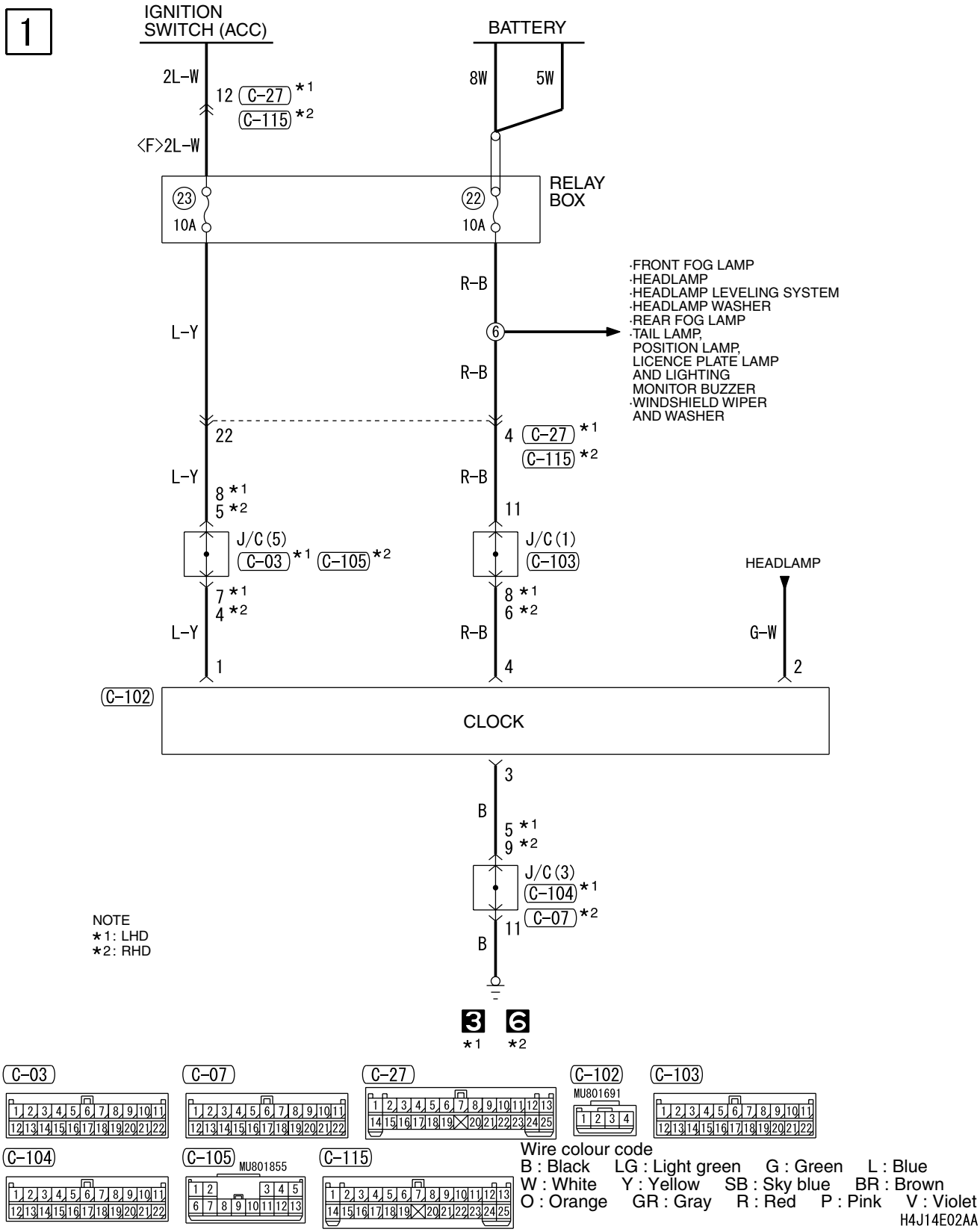

CIGARETTE LIGHTER AND ASHTRAY ILLUMINATION LAMP

M1901007800469

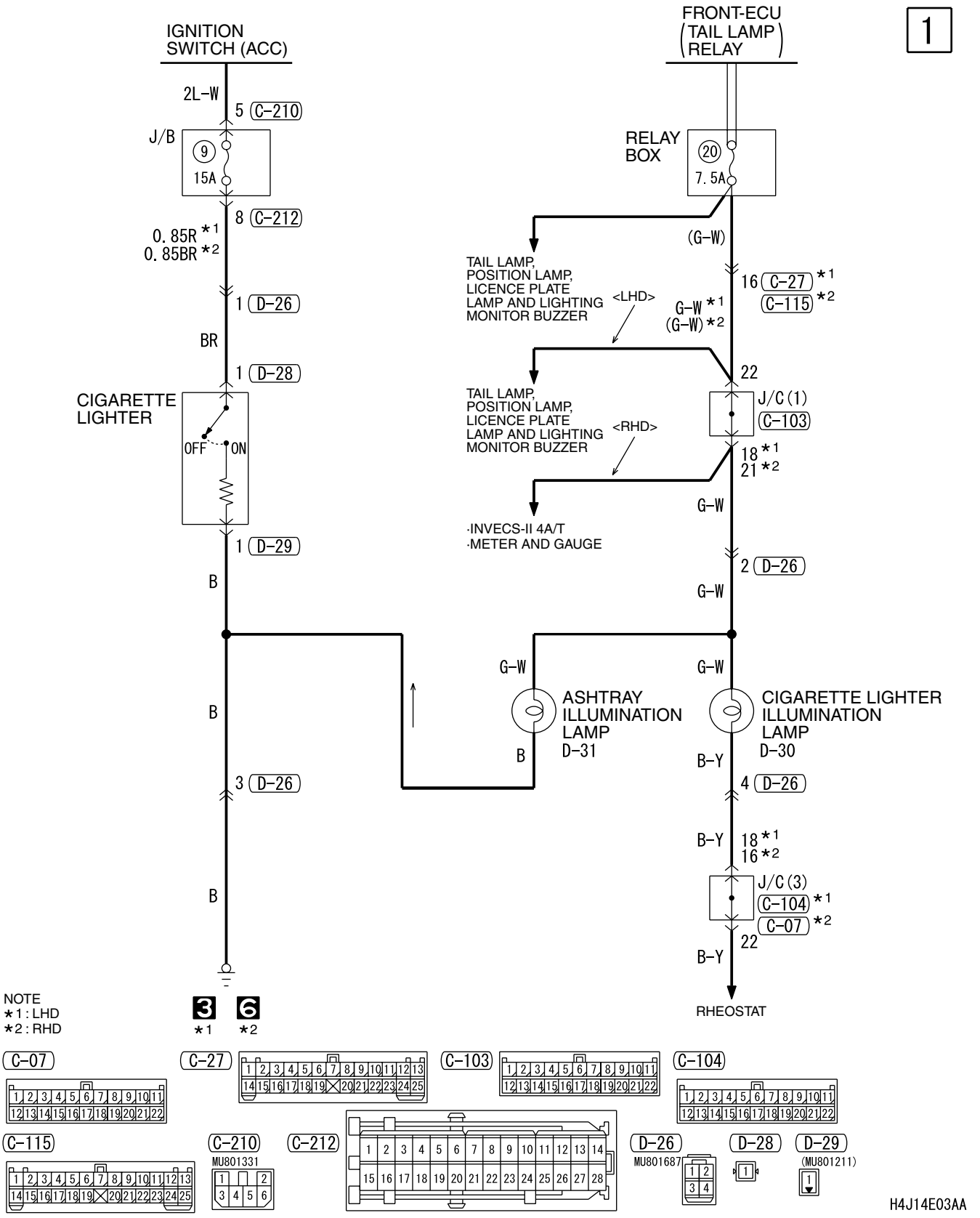

ACCESSORY SOCKET

M1901019100014

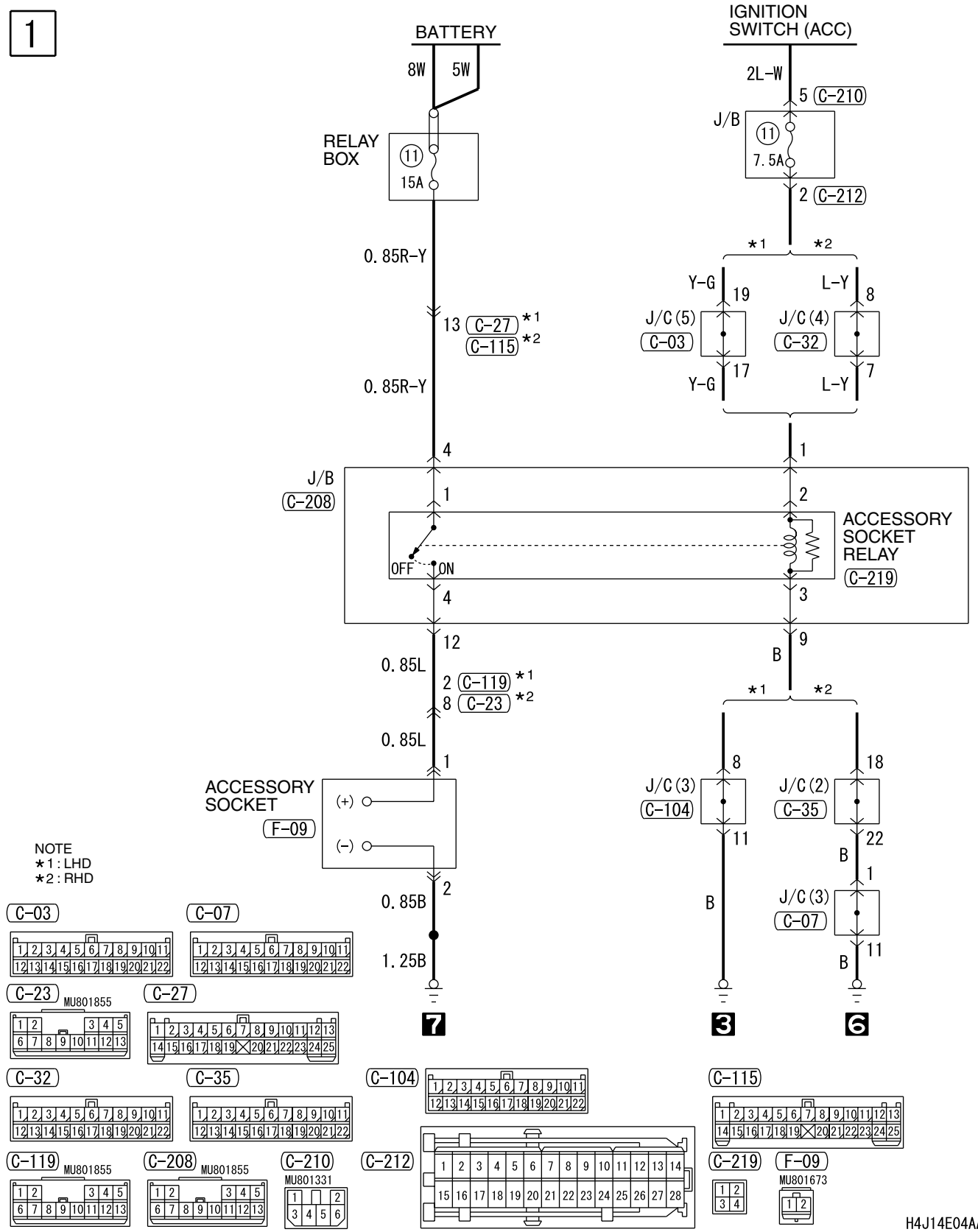

SPARE CONNECTOR (FOR FORNT FOG LAMP)

M1901019300018

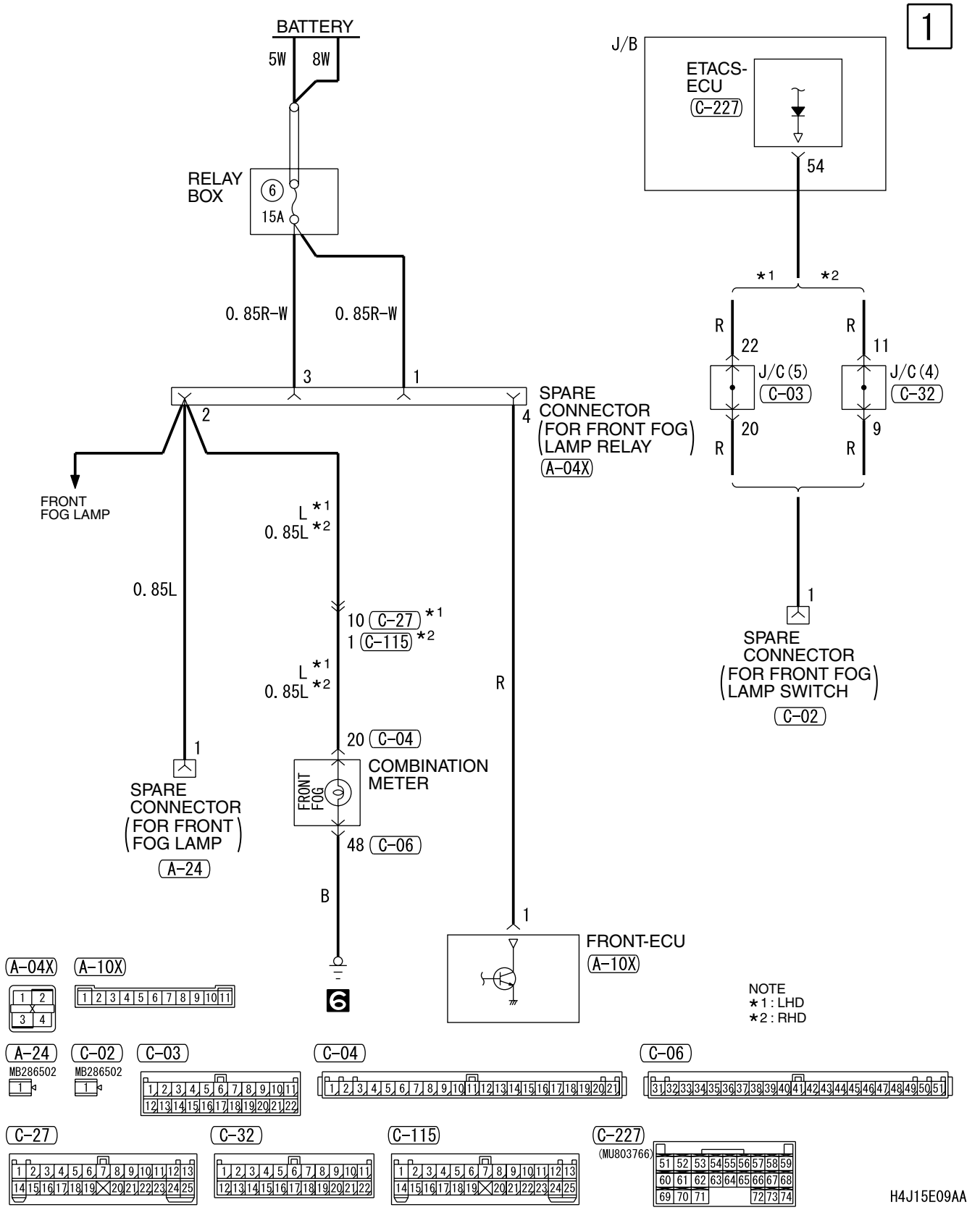

IMMOBILIZER SYSTEM <LHD>

M1901013600936

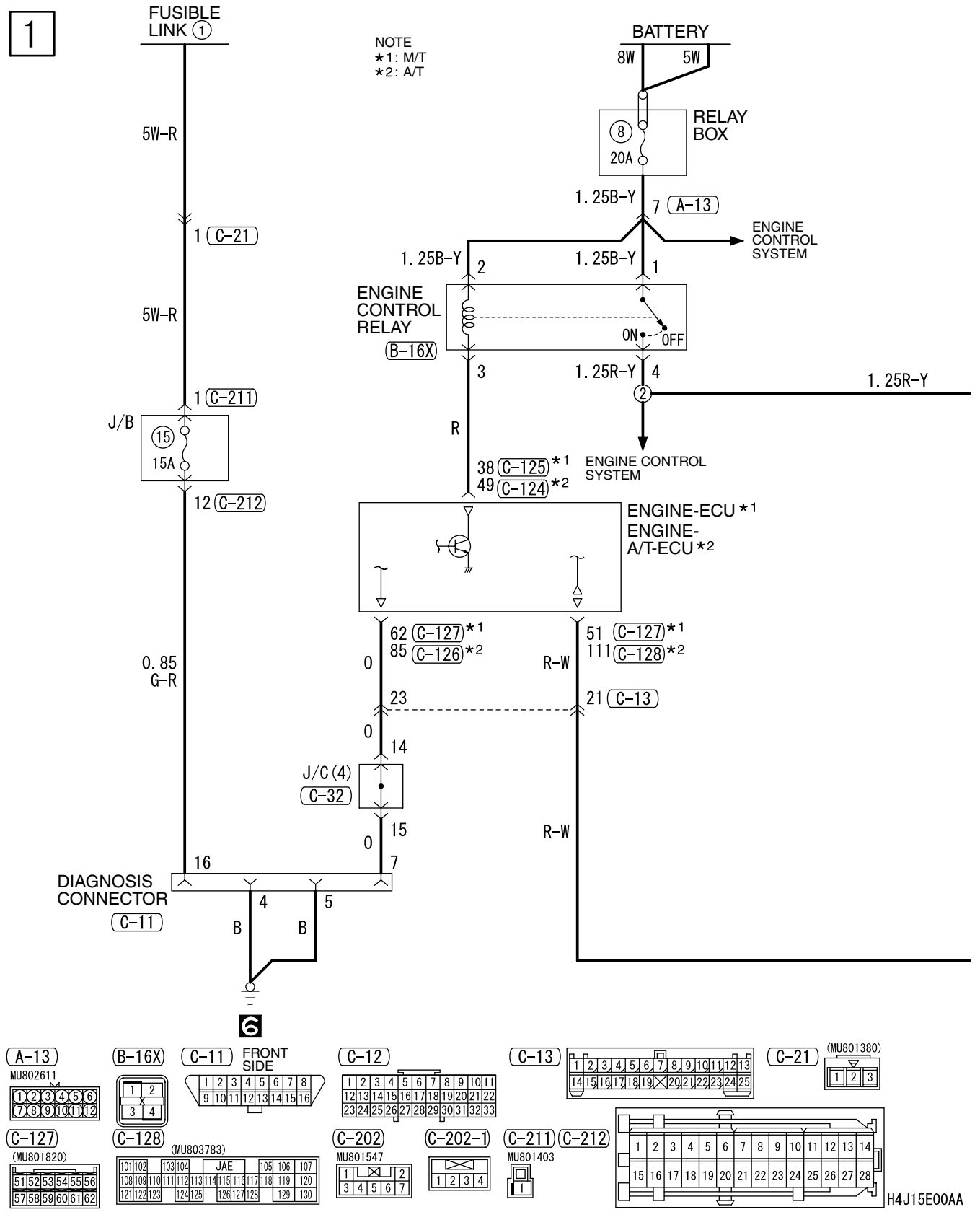

2

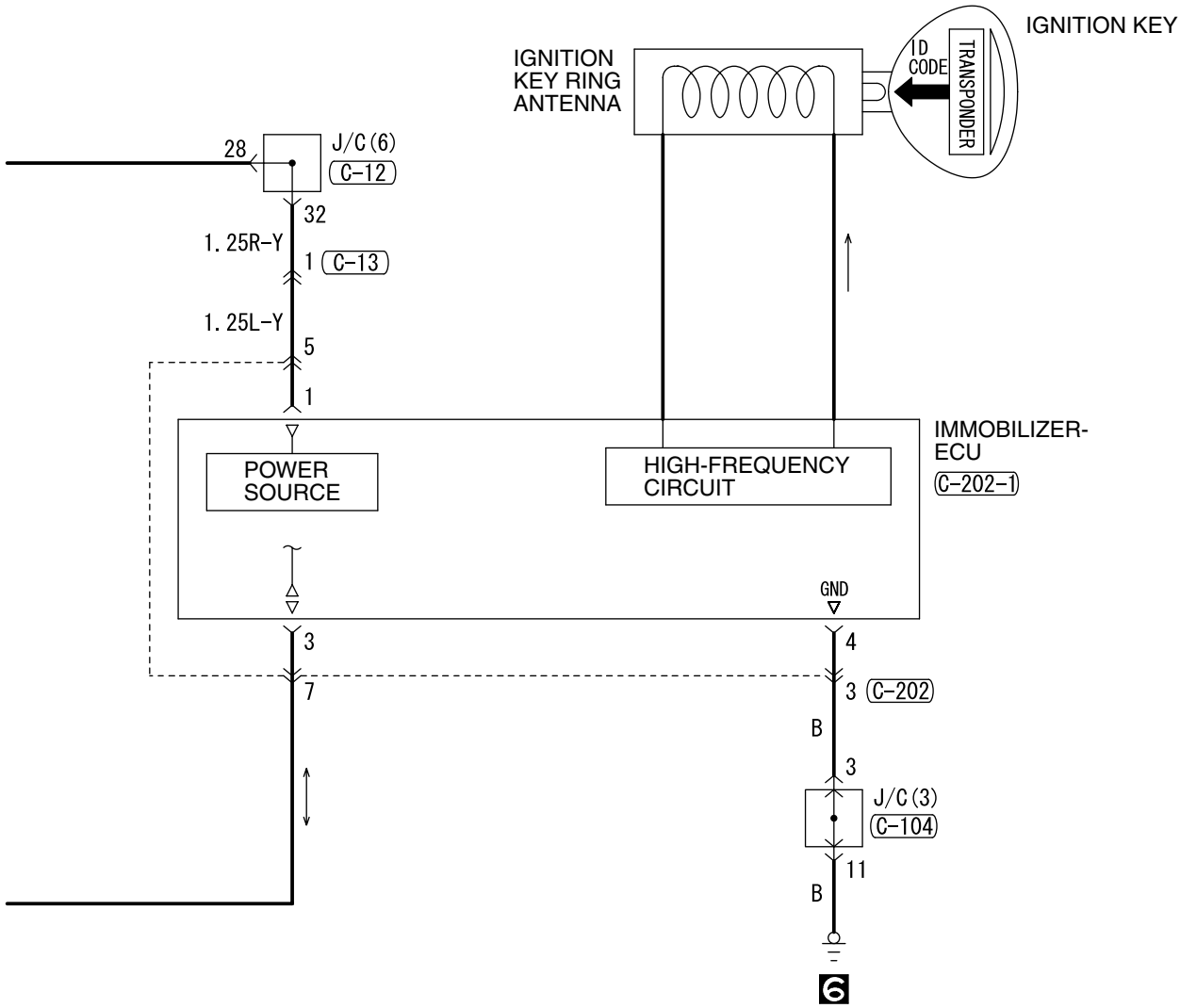

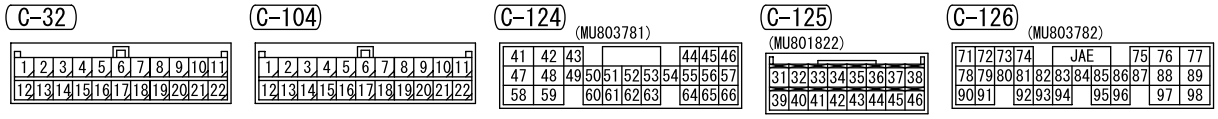

Wire colour code
B : Black LG : Light green G : Green L : Blue W : White Y : Yellow SB : Sky blue
BR : Brown O : Orange GR : Gray R : Red P : Pink V : Violet

H4J15E00AB

IMMOBILIZER SYSTEM <RHD>

M1901013600947

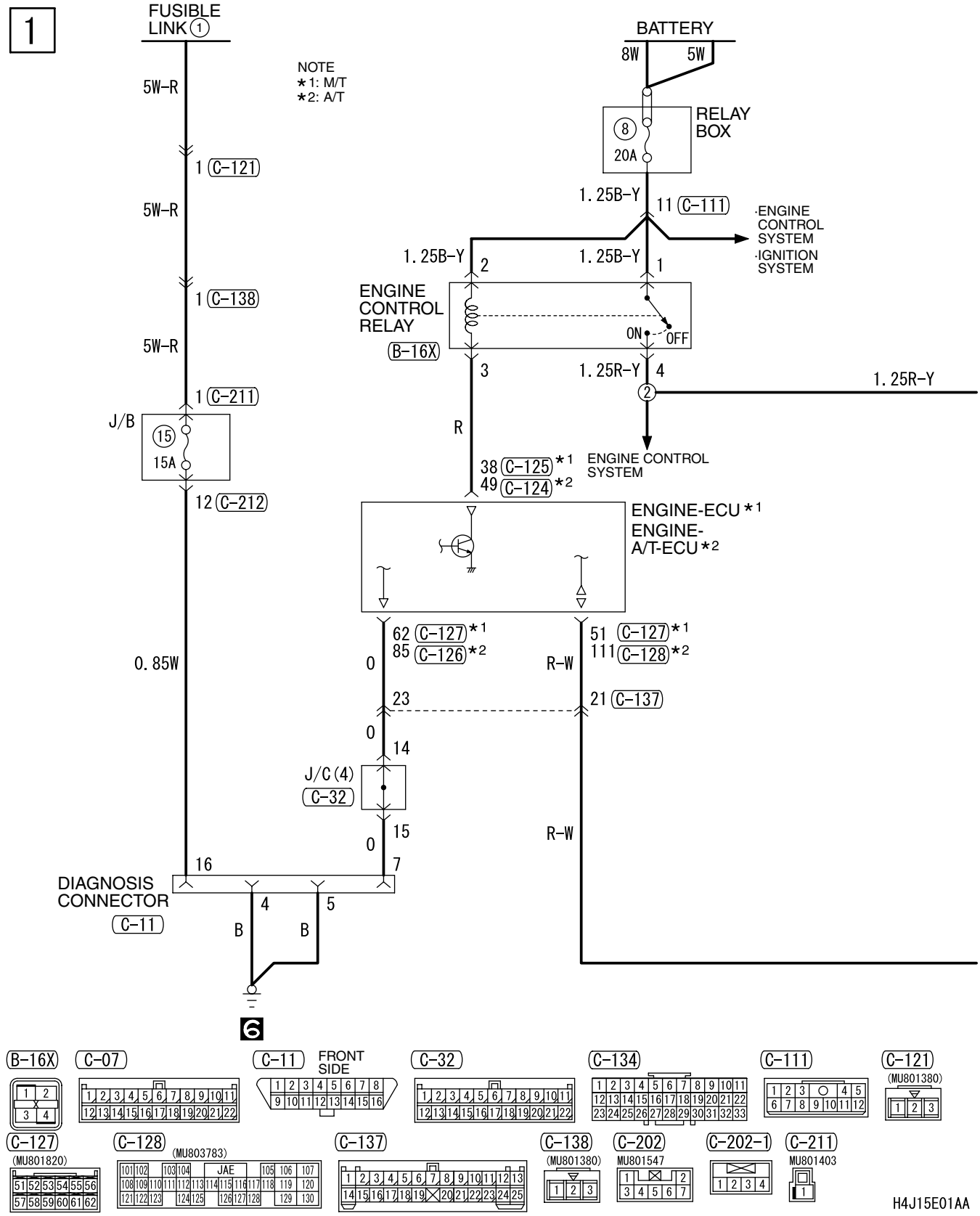

2

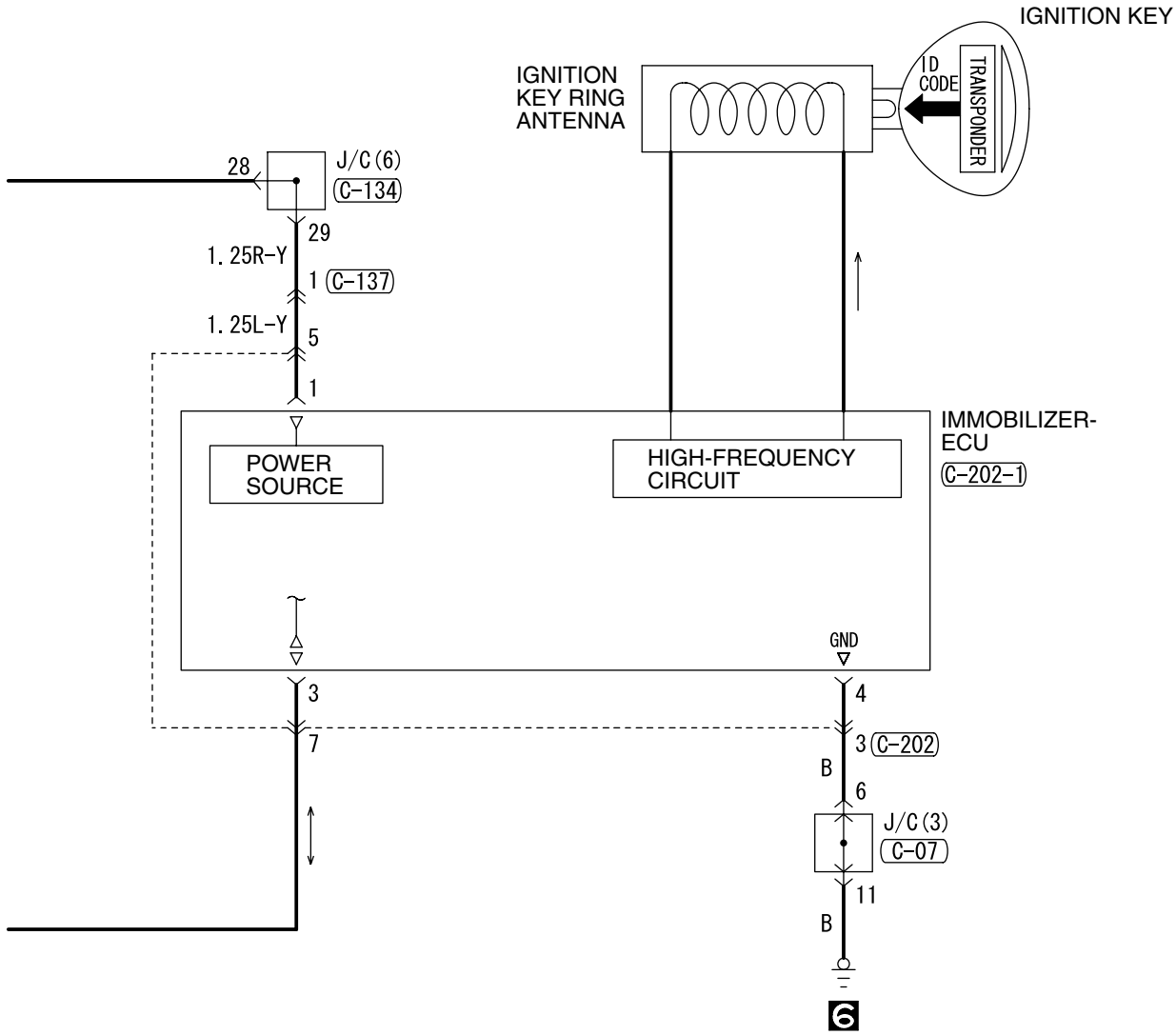

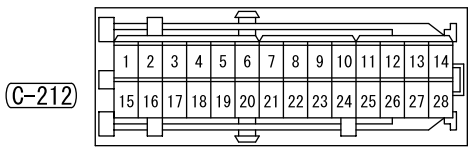

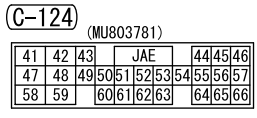

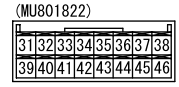

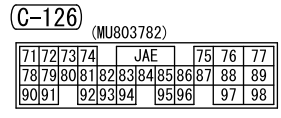

Wire colour code
B : Black LG : Light green G : Green L : Blue
W : White Y : Yellow SB : Sky blue BR : Brown
O : Orange GR : Gray R : Red P : Pink V : Violet

H4J15E01AB

ABS <LHD>

M1901019200011

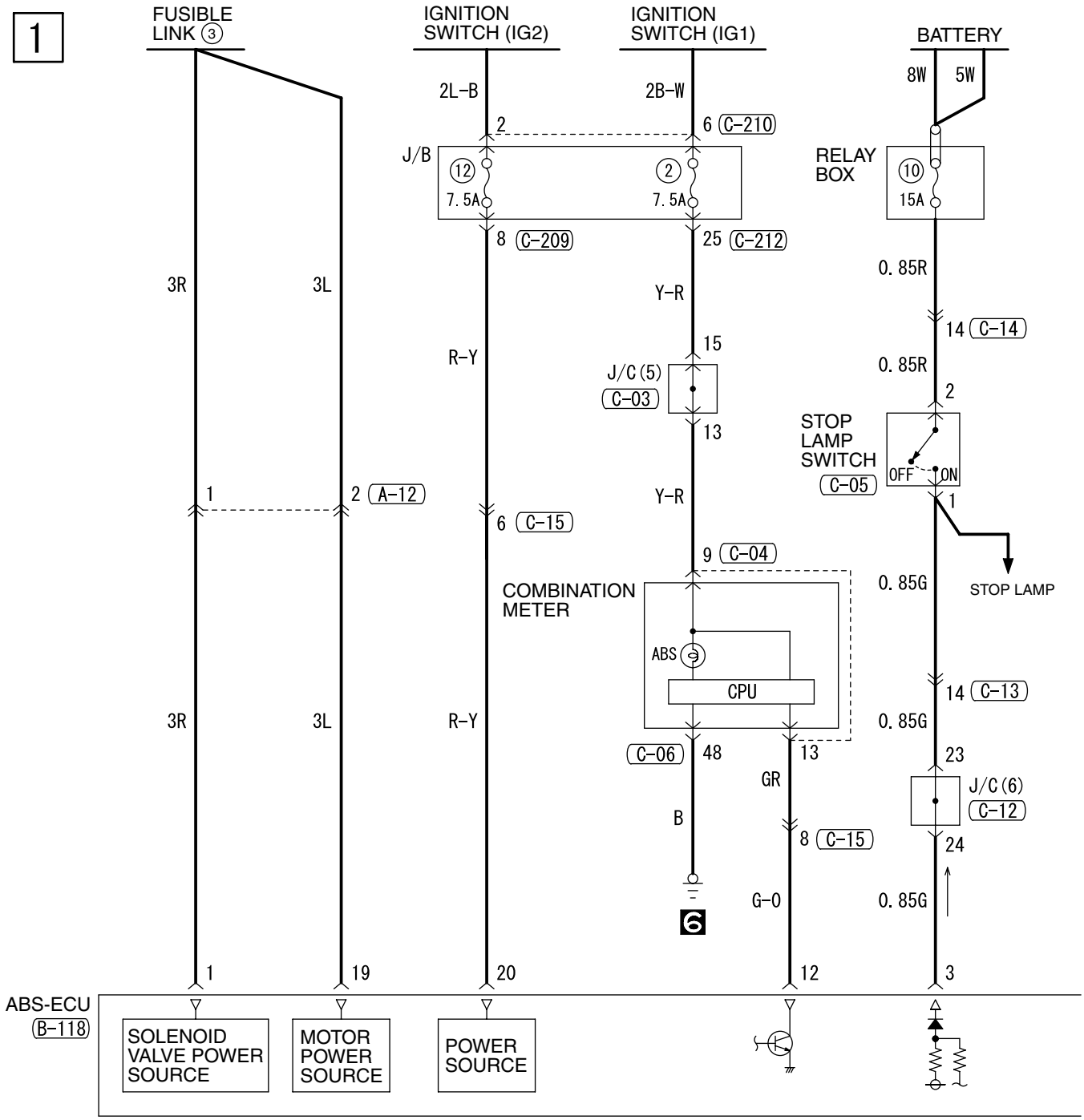

2

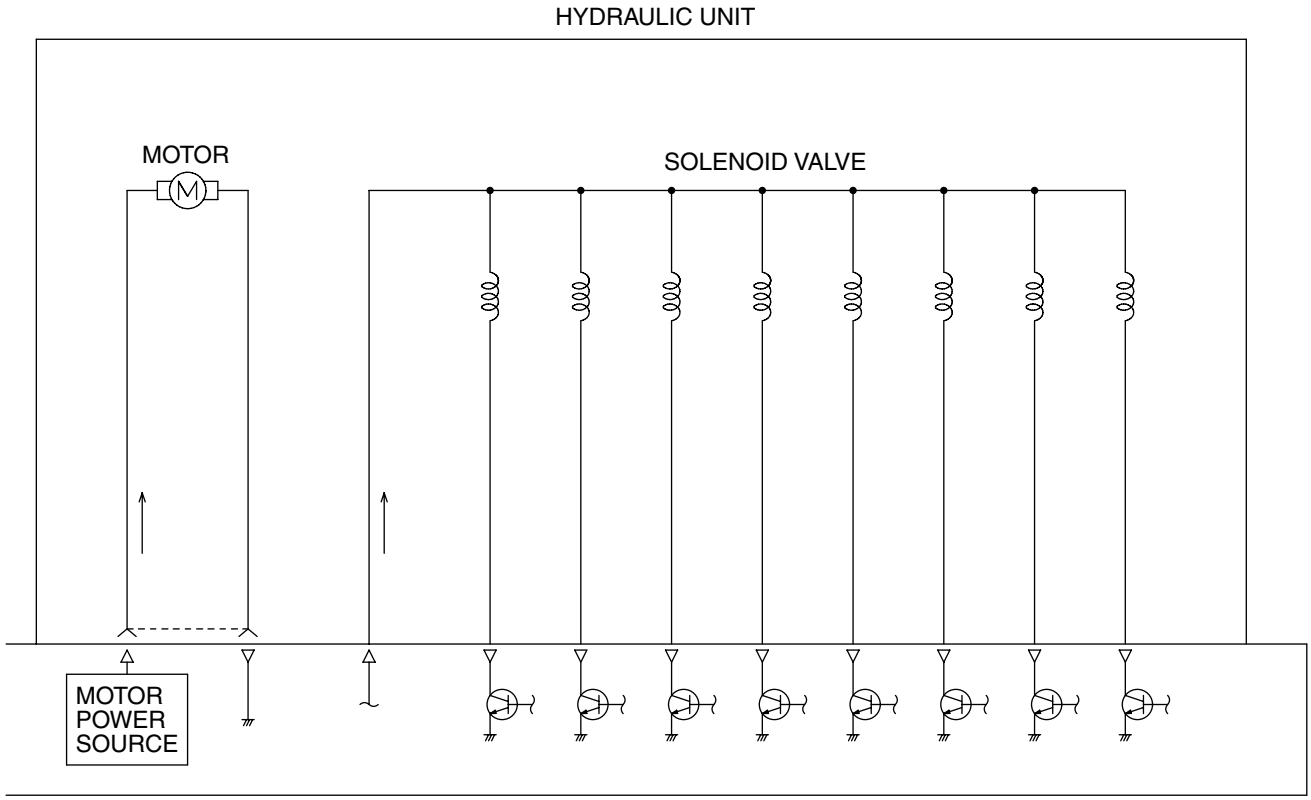

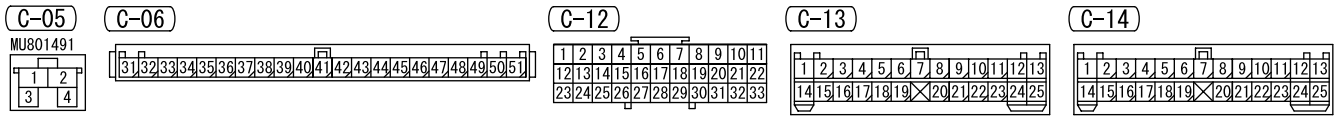

Wire colour code
B : Black LG : Light green G : Green L : Blue W : White Y : Yellow SB : Sky blue
BR : Brown O : Orange GR : Gray R : Red P : Pink V : Violet

H4J15E02AB

ABS <LHD> (CONTINUED)

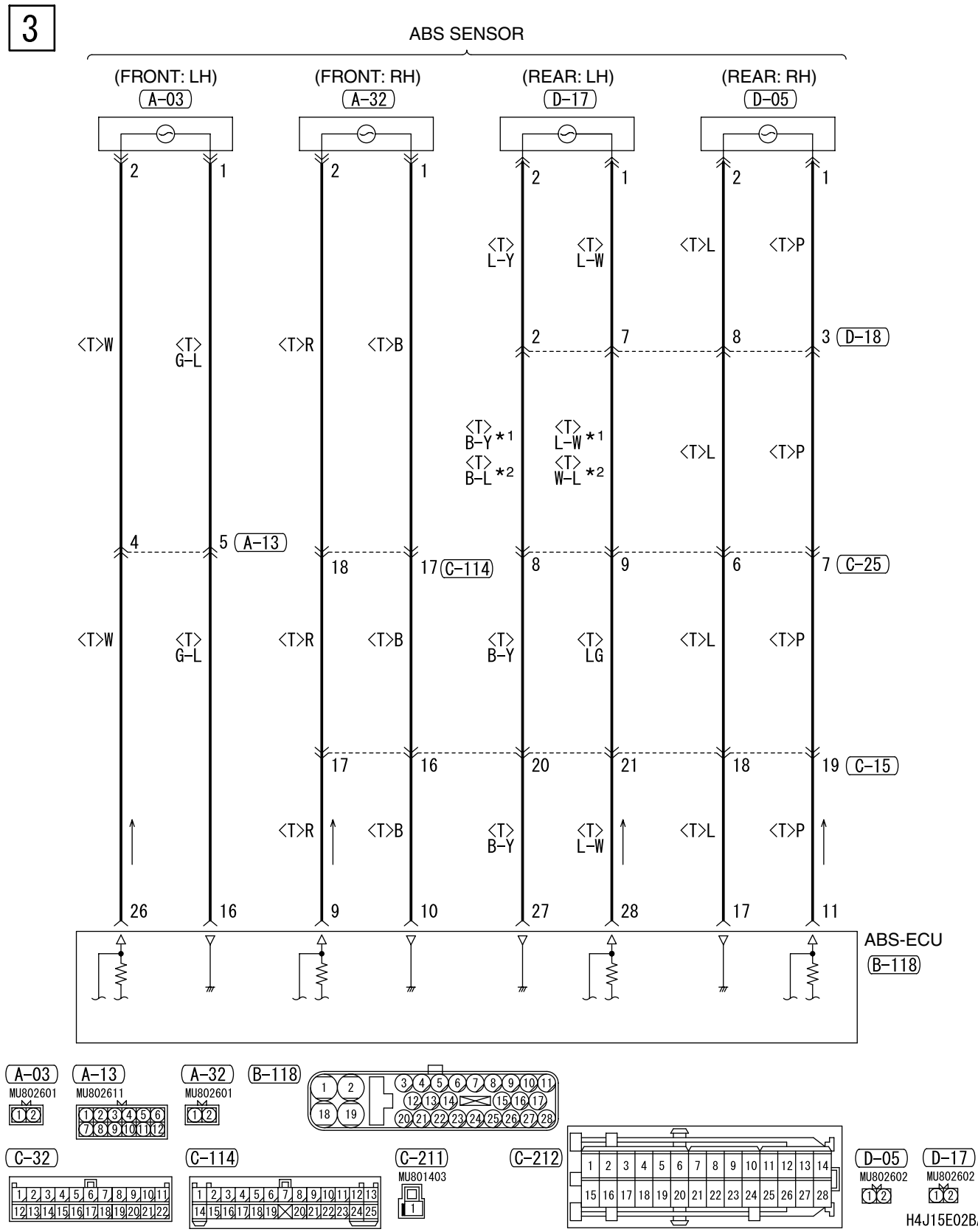

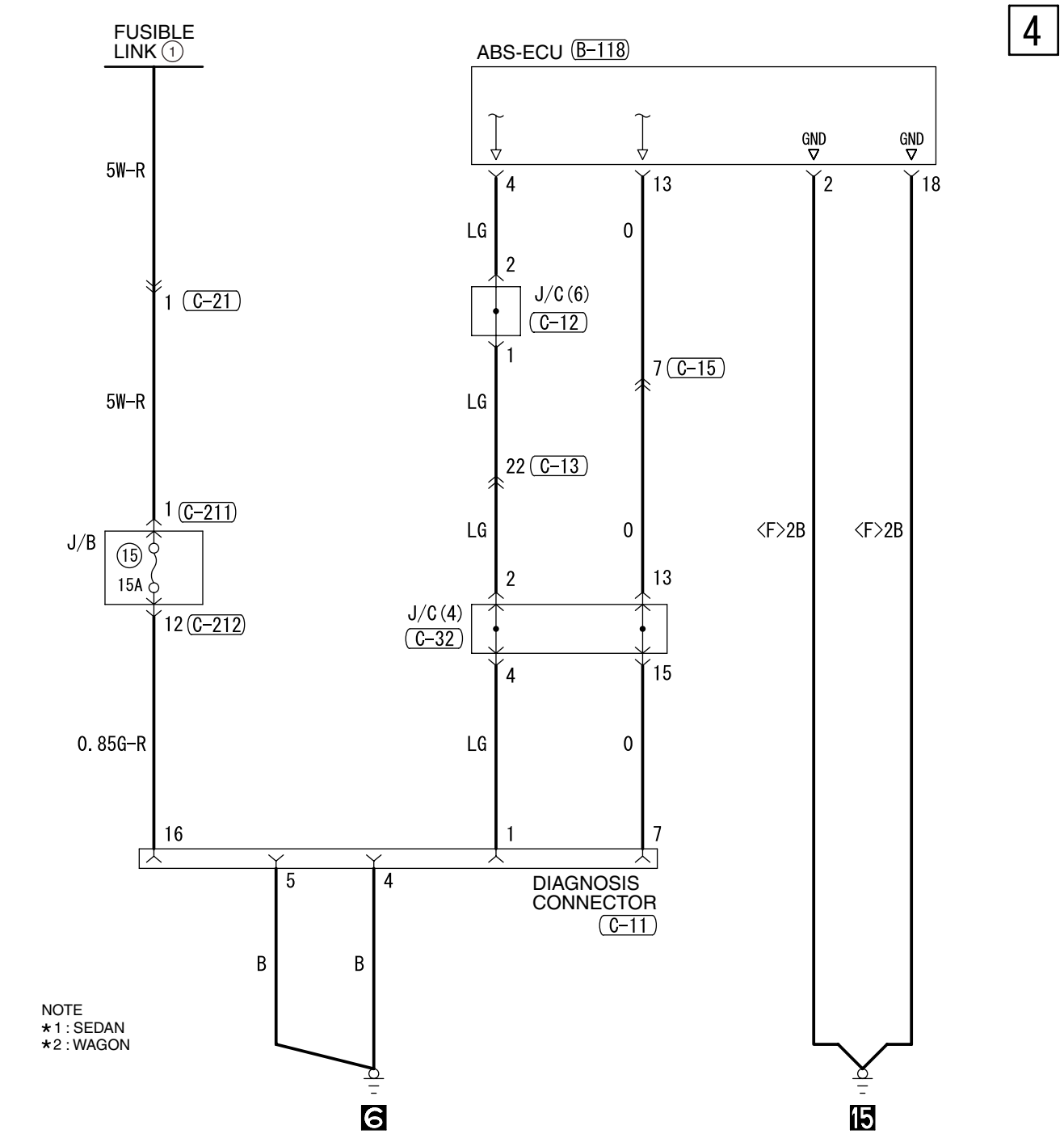

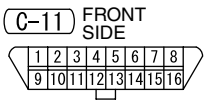

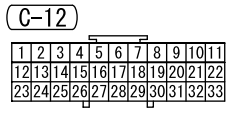

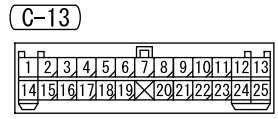

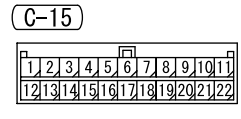

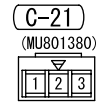

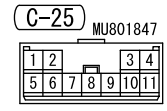

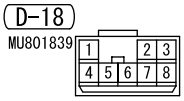

Wire colour code
B : Black LG : Light green G : Green L : Blue W : White Y : Yellow SB : Sky blue
BR : Brown O : Orange GR : Gray R : Red P : Pink V : Violet

H4J15E02BB

ABS <RHD>

M1901019200022

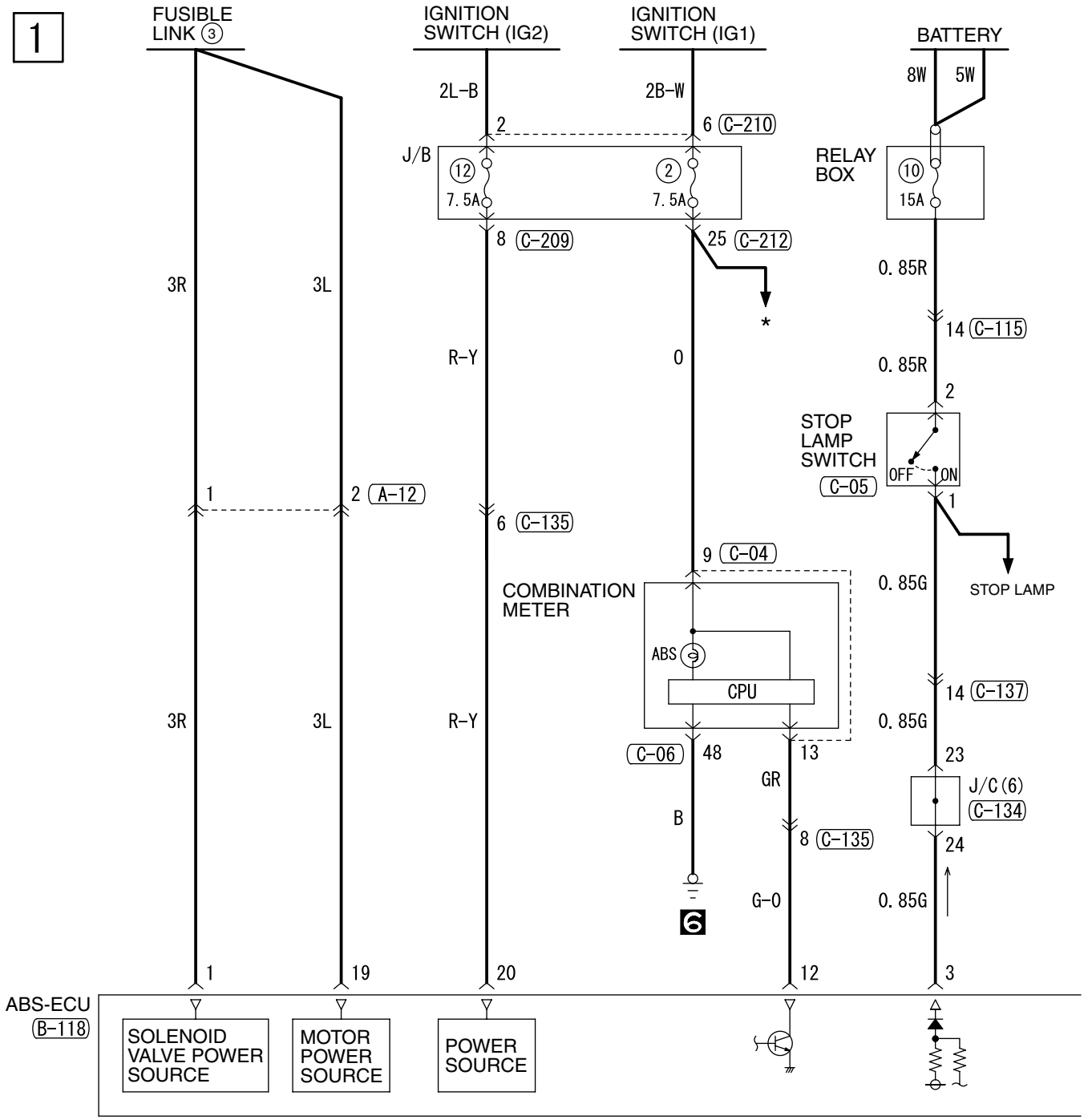

2

NOTE
*: TAIL LAMP,
POSITION LAMP,
LICENCE PLATE
LAMP AND LIGHTING
MONITOR BUZZER

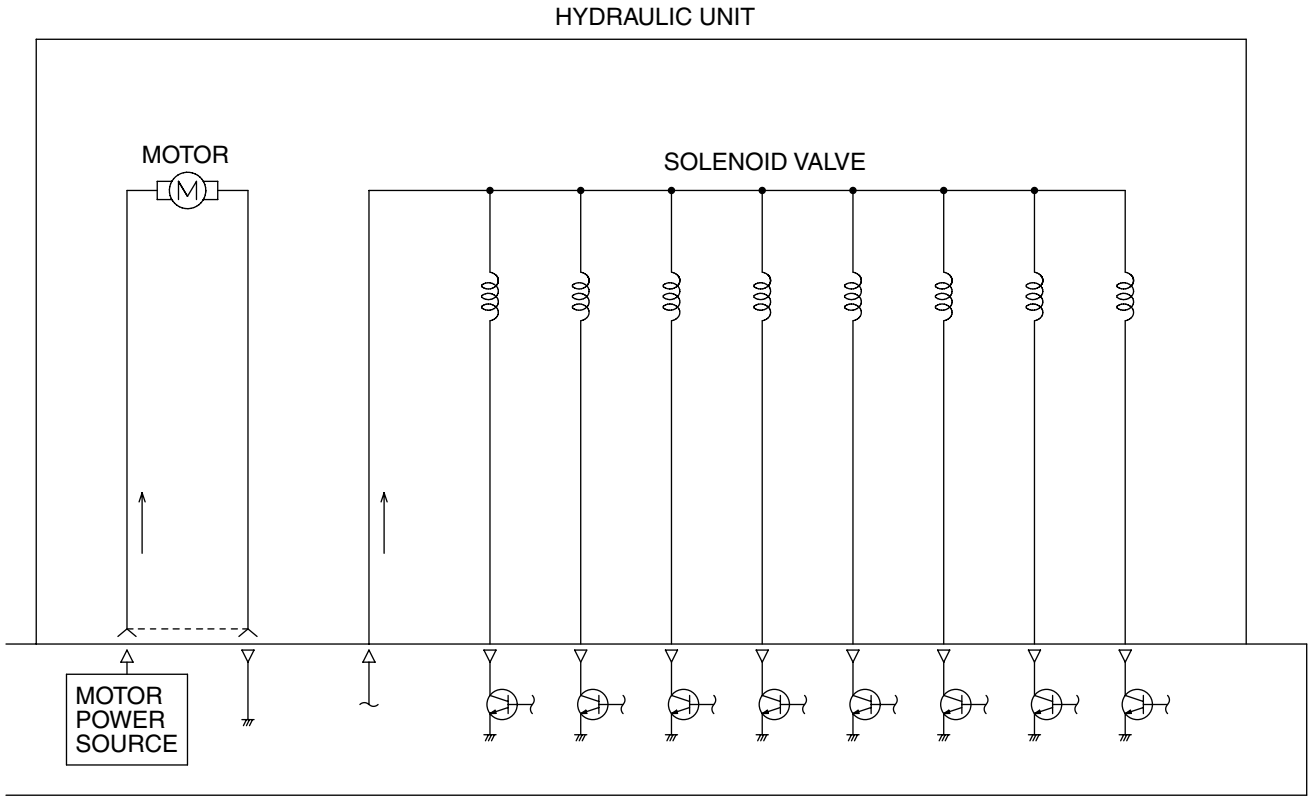

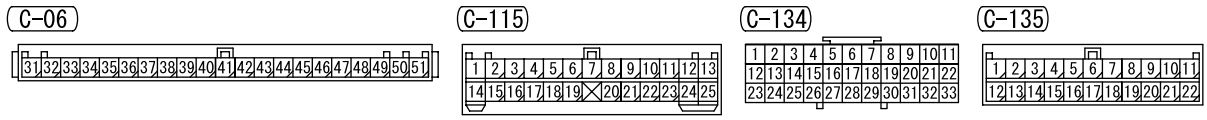

Wire colour code
B : Black LG : Light green G : Green L : Blue W : White Y : Yellow SB : Sky blue
BR : Brown O : Orange GR : Gray R : Red P : Pink V : Violet

H4J15E03AB

ABS <RHD> (CONTINUED)

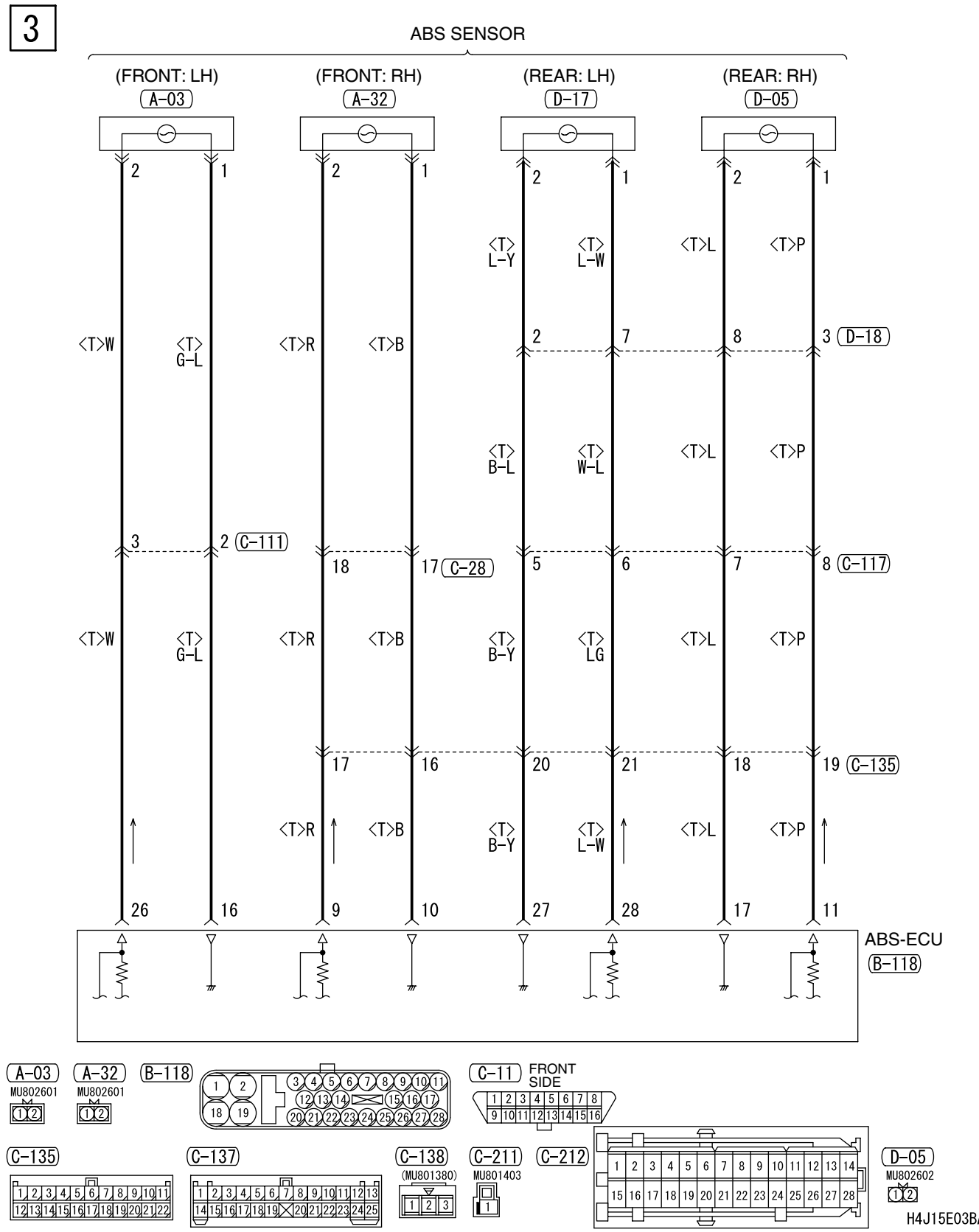

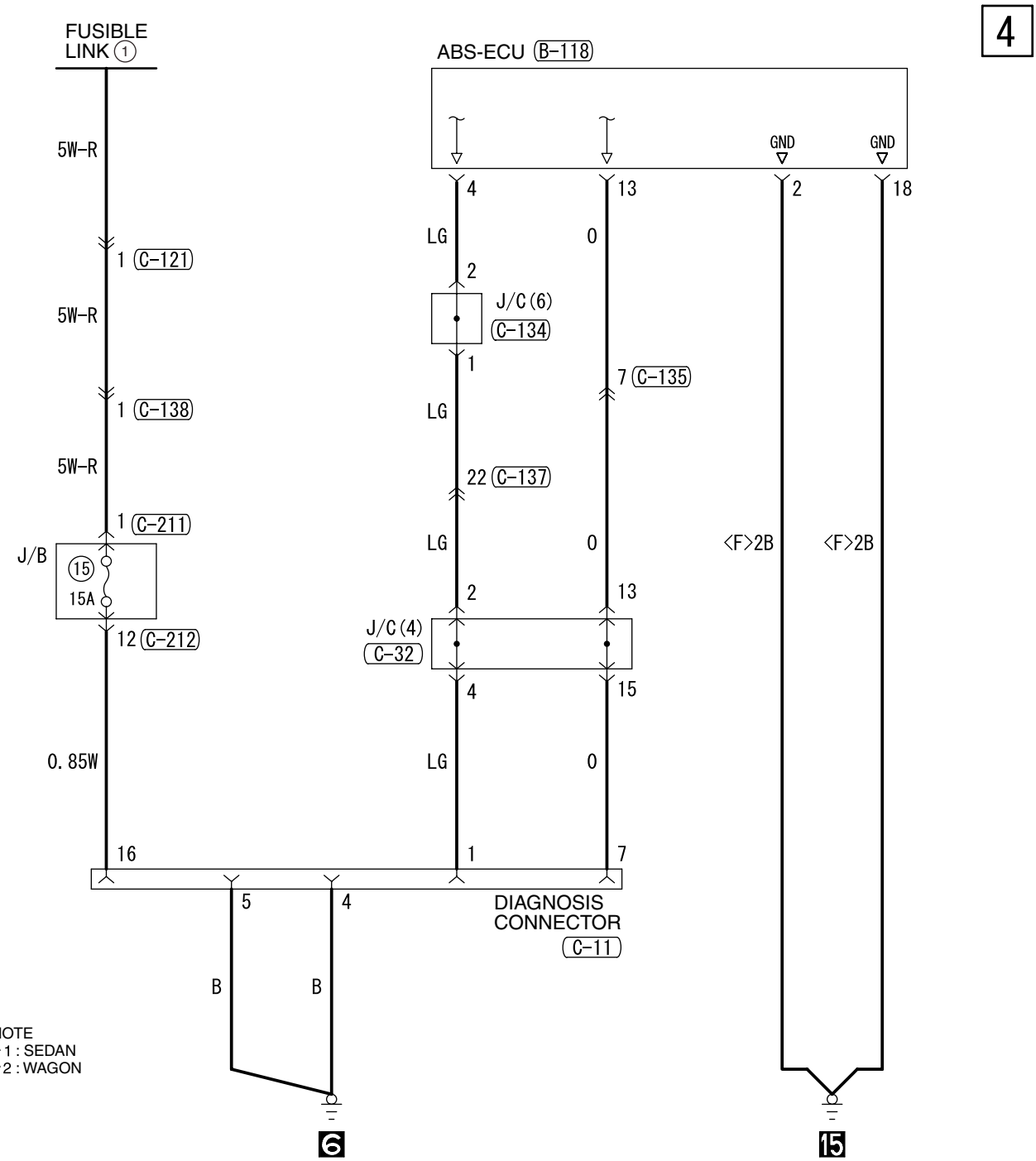

NOTE
*1 : SEDAN
*2 : WAGON

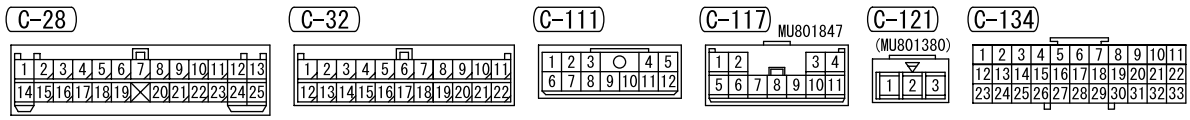

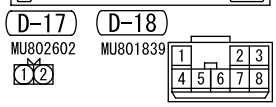

Wire colour code
B : Black LG : Light green G : Green L : Blue W : White Y : Yellow SB : Sky blue
BR : Brown O : Orange GR : Gray R : Red P : Pink V : Violet

H4J15E03BB

HEATED SEAT

M1901010700257

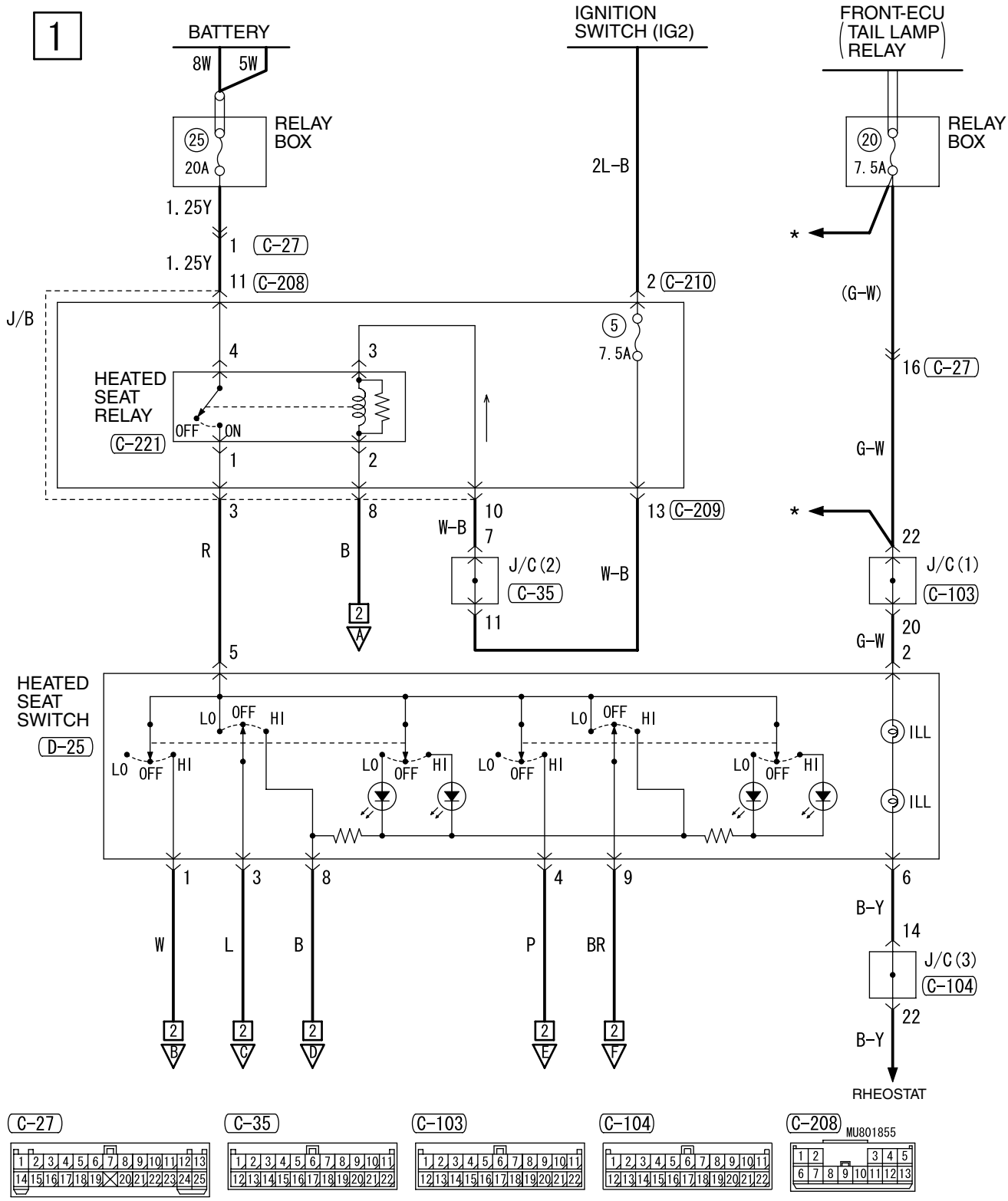

H4J15E06AA

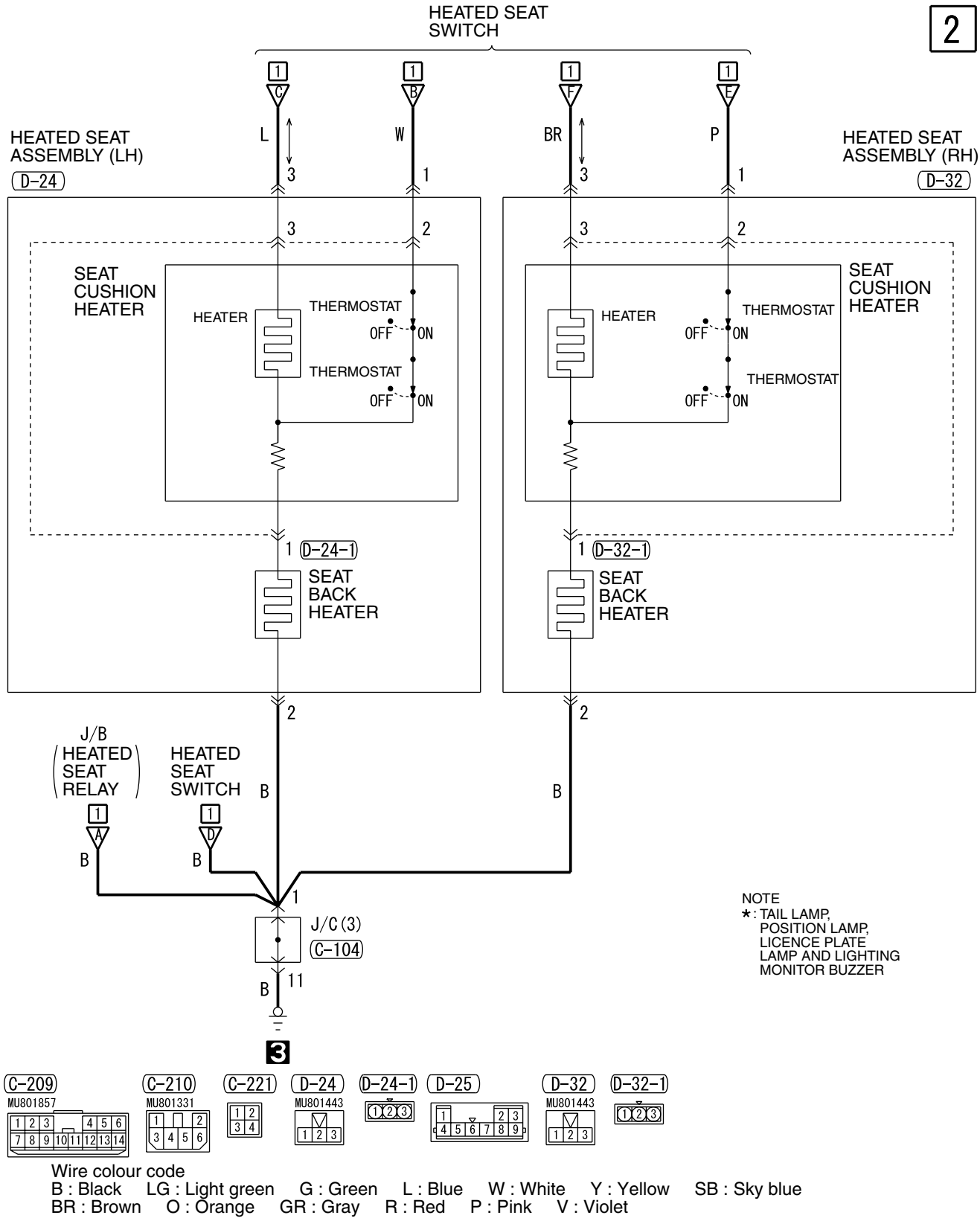

Wire colour code
B : Black LG : Light green G : Green L : Blue W : White Y : Yellow SB : Sky blue
BR : Brown O : Orange GR : Gray R : Red P : Pink V : Violet

H4J15E06AB

RHEOSTAT <LHD>

M1901011100571

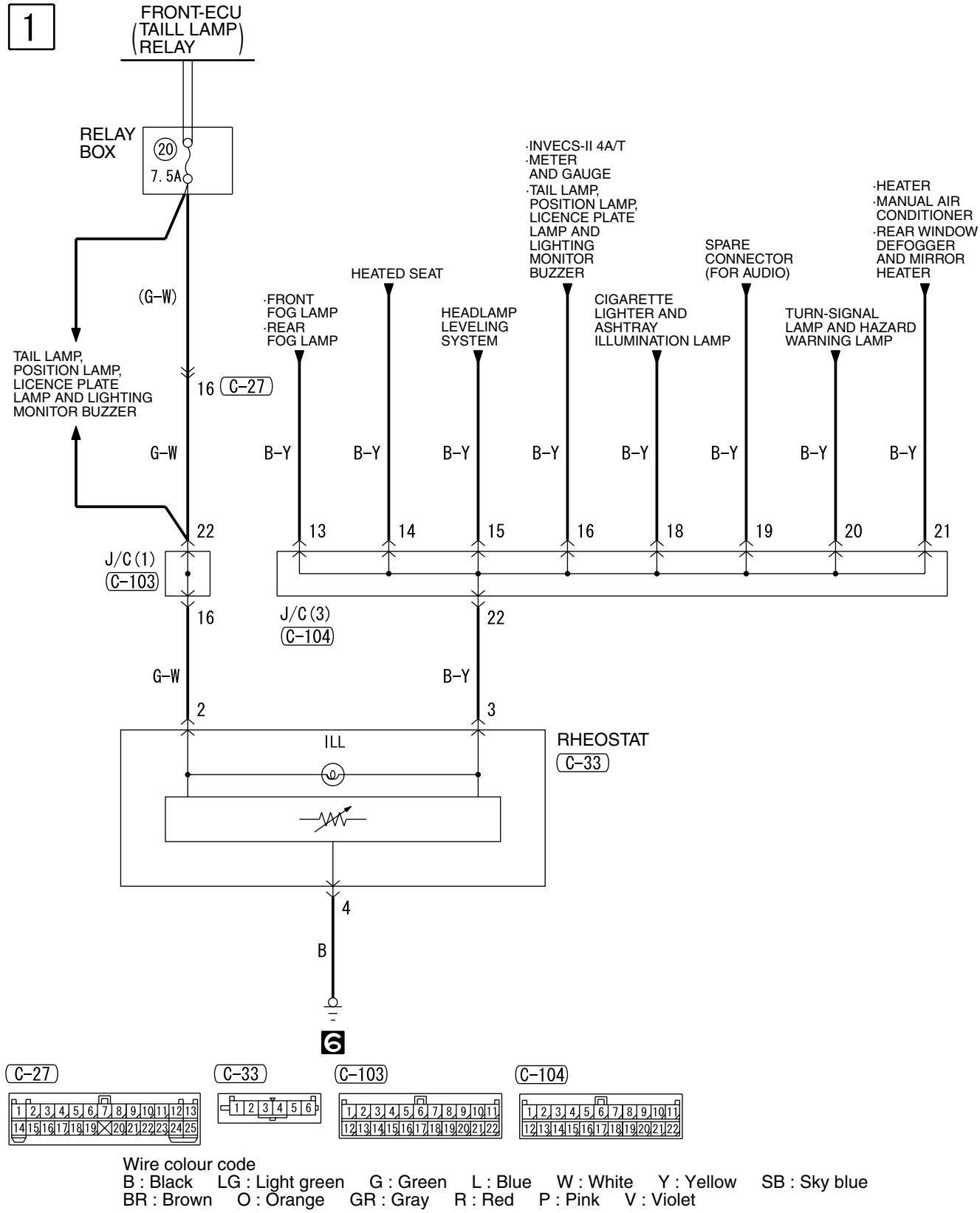

Wire colour code
B : Black LG : Light green G : Green L : Blue W : White Y : Yellow SB : Sky blue
BR : Brown O : Orange GR : Gray R : Red P : Pink V : Violet

H4J15E07AA

RHEOSTAT <RHD>

M1901011100582

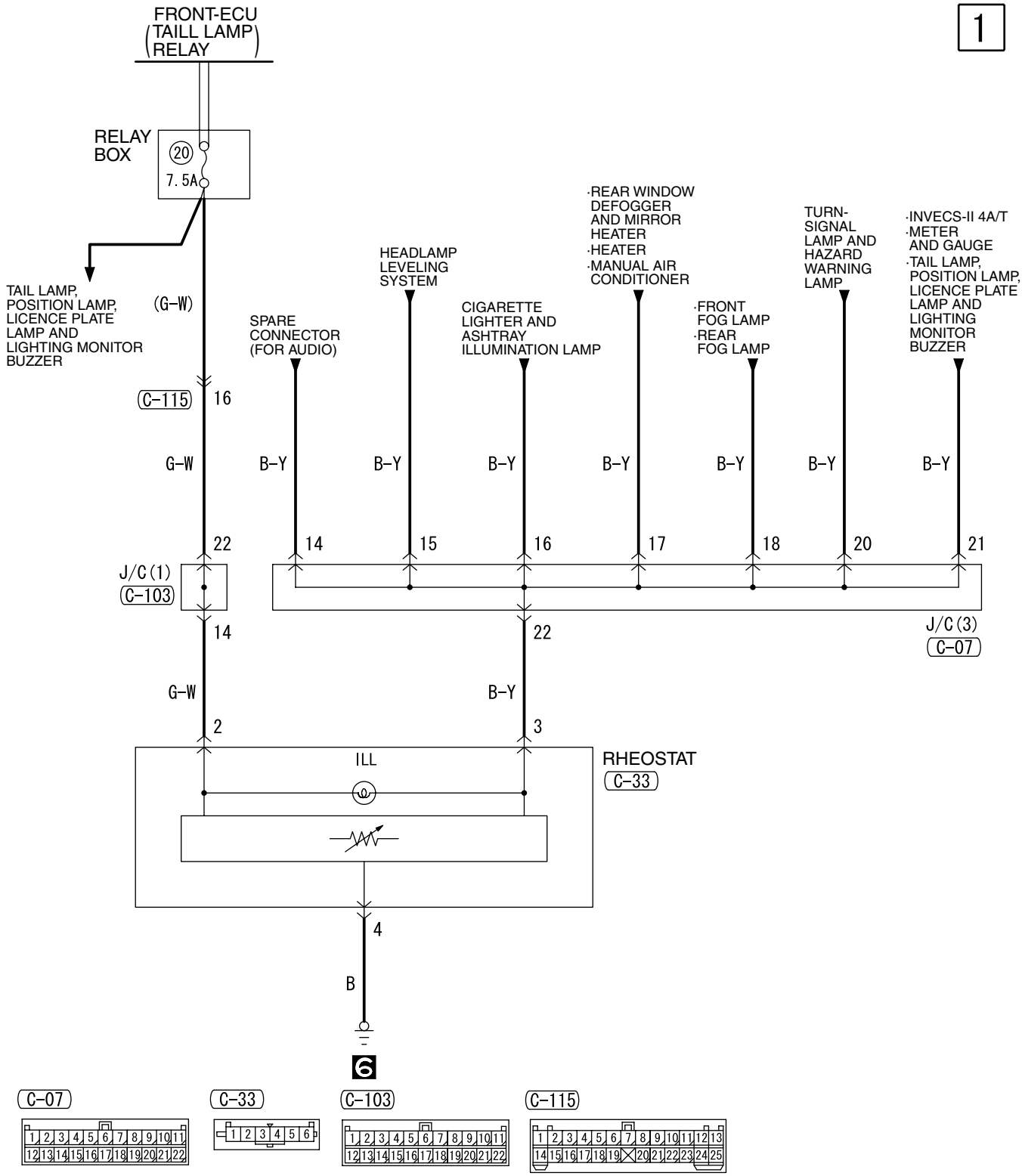

Wire colour code
B : Black LG : Light green G : Green L : Blue W : White Y : Yellow SB : Sky blue
BR : Brown O : Orange GR : Gray R : Red P : Pink V : Violet

H4J15E08AA

SUPPLEMENTAL RESTRAINT SYSTEM (SRS) <LHD>

M1901009700877

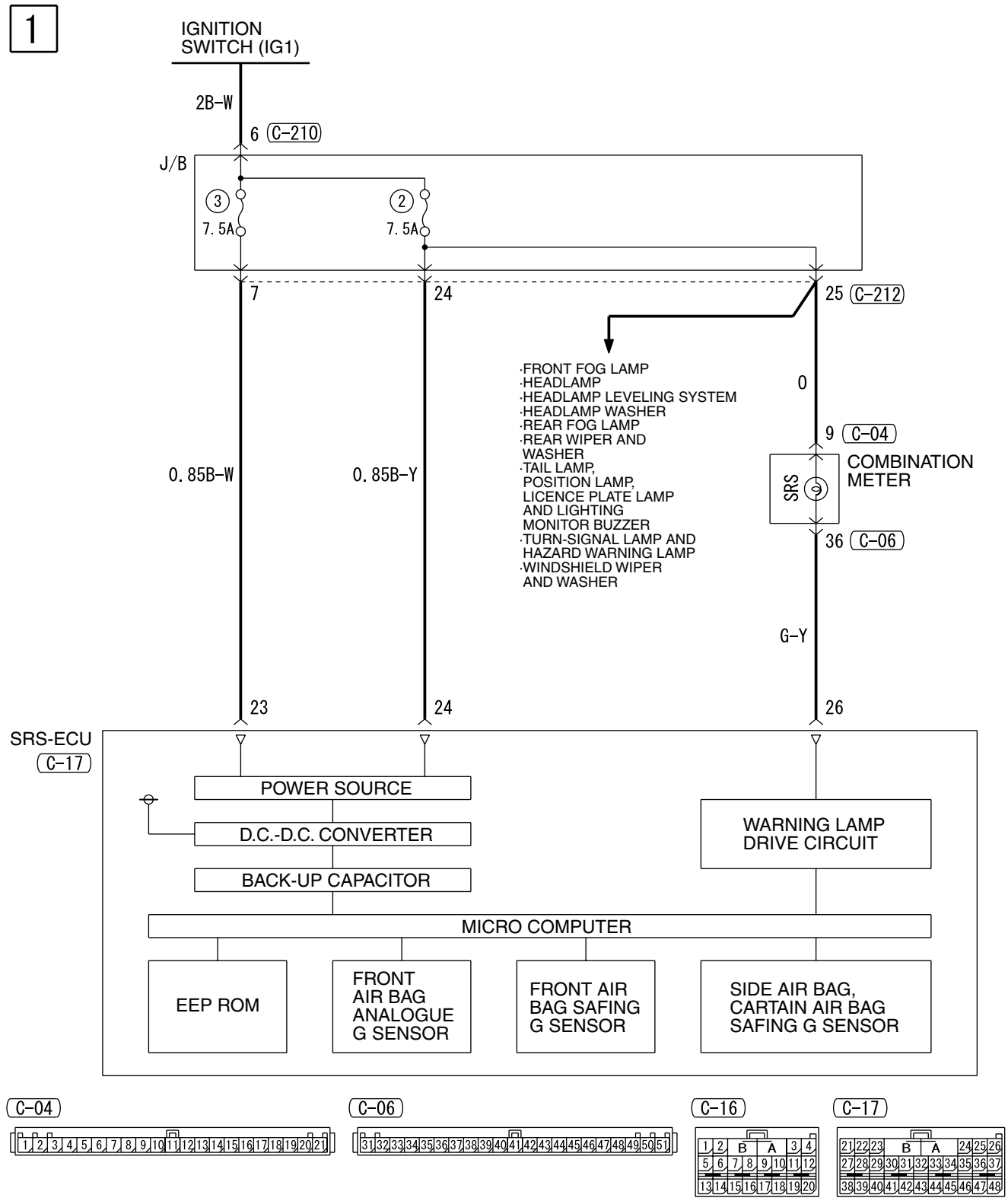

H4J15E10AA

2

NOTE
*1: CONNECTOR COUPLED: ON
CONNECTOR UNCOUPLED: OFF
*2: SEDAN
*3: WAGON

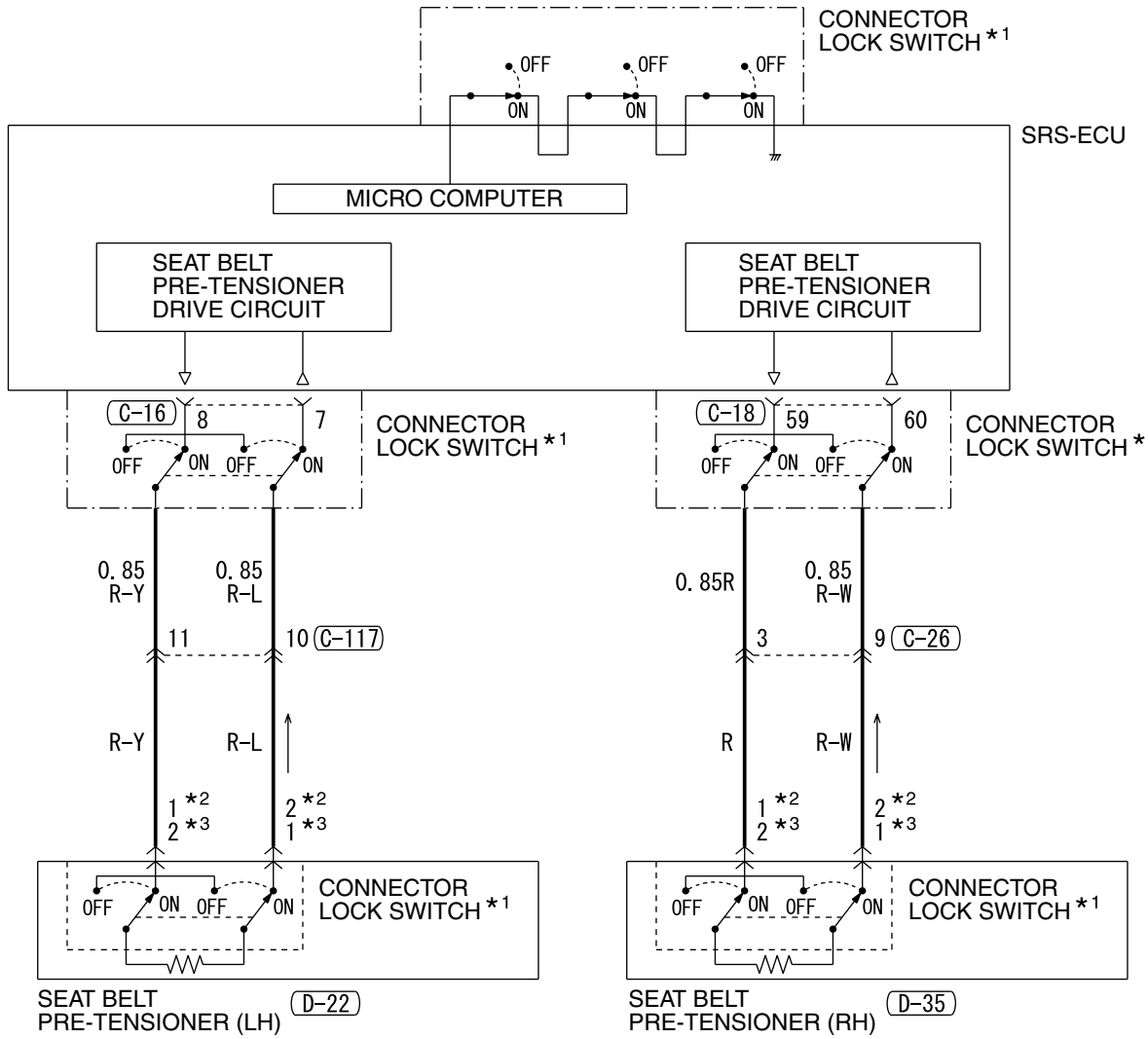

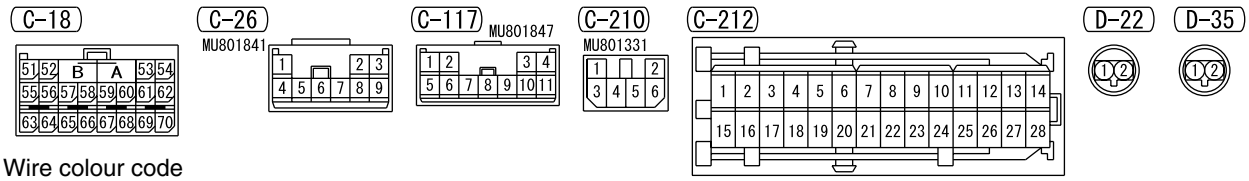

Wire colour code
B : Black LG : Light green G : Green L : Blue W : White Y : Yellow SB : Sky blue
BR : Brown O : Orange GR : Gray R : Red P : Pink V : Violet

H4J15E10AB

SUPPLEMENTAL RESTRAINT SYSTEM (SRS) <LHD> (CONTINUED)

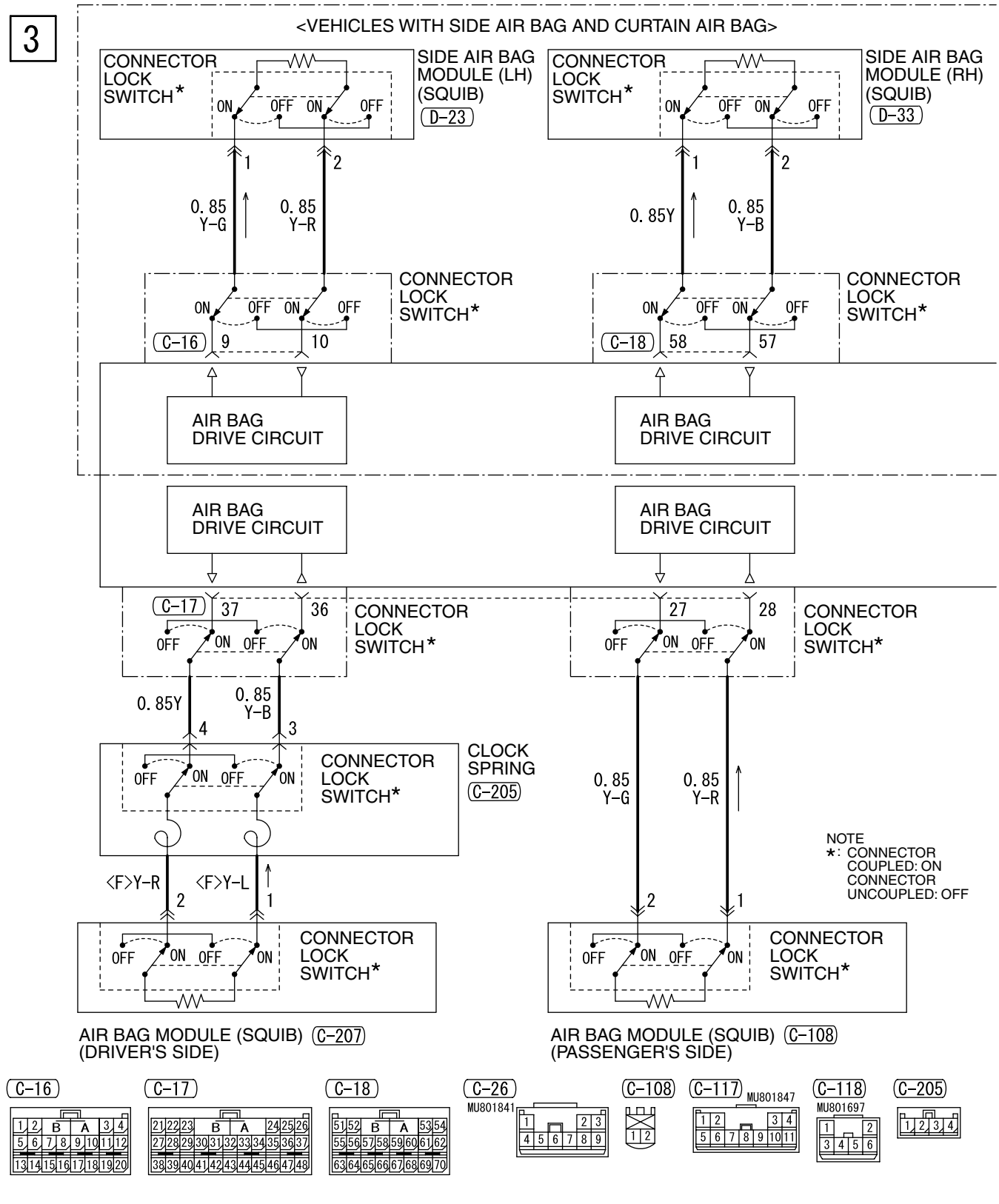

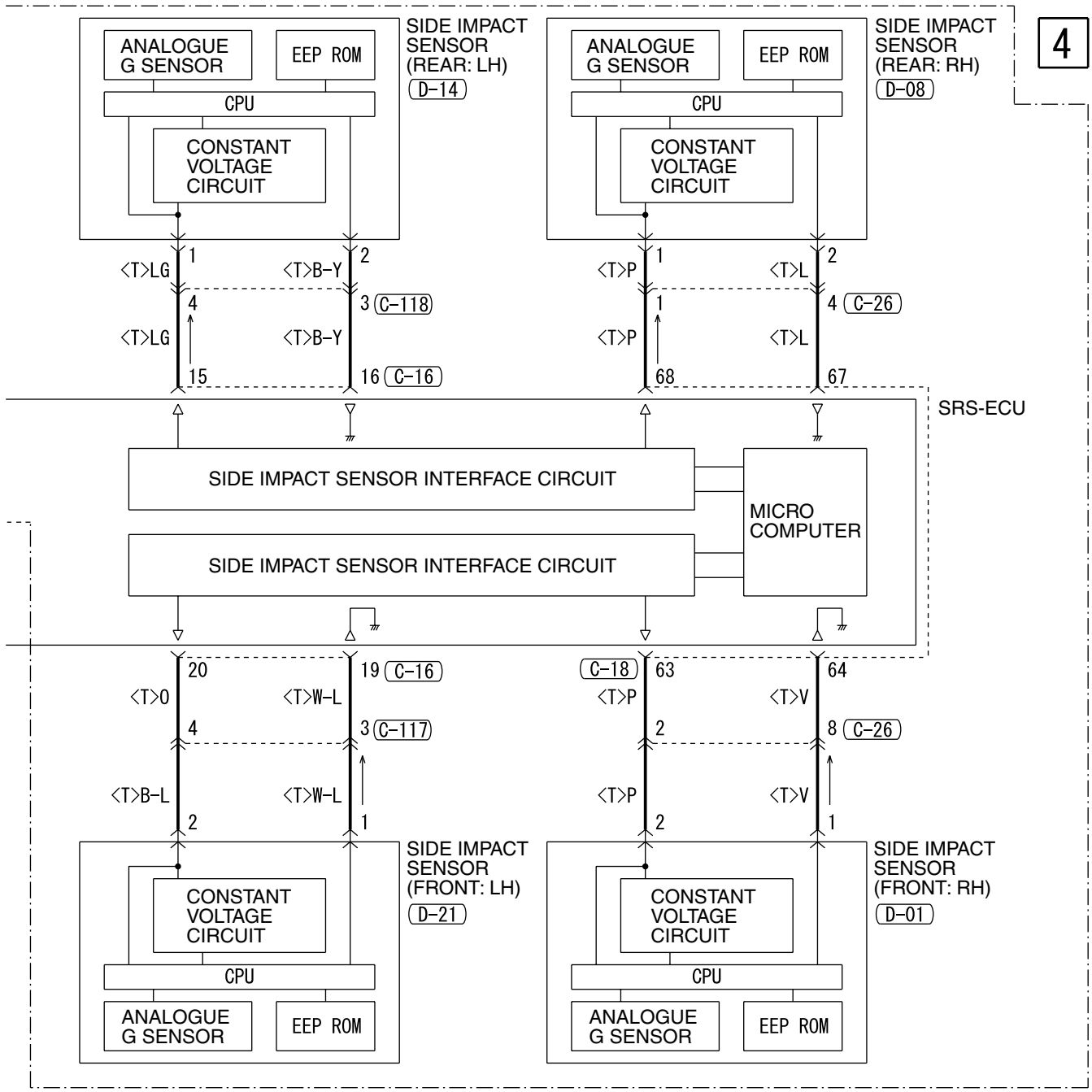

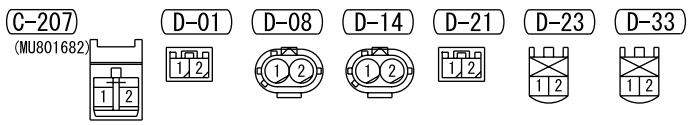

Wire colour code
B : Black LG : Light green G : Green L : Blue W : White Y : Yellow SB : Sky blue
BR : Brown O : Orange GR : Gray R : Red P : Pink V : Violet

H4J15E10BB

SUPPLEMENTAL RESTRAINT SYSTEM (SRS) <LHD> (CONTINUED)

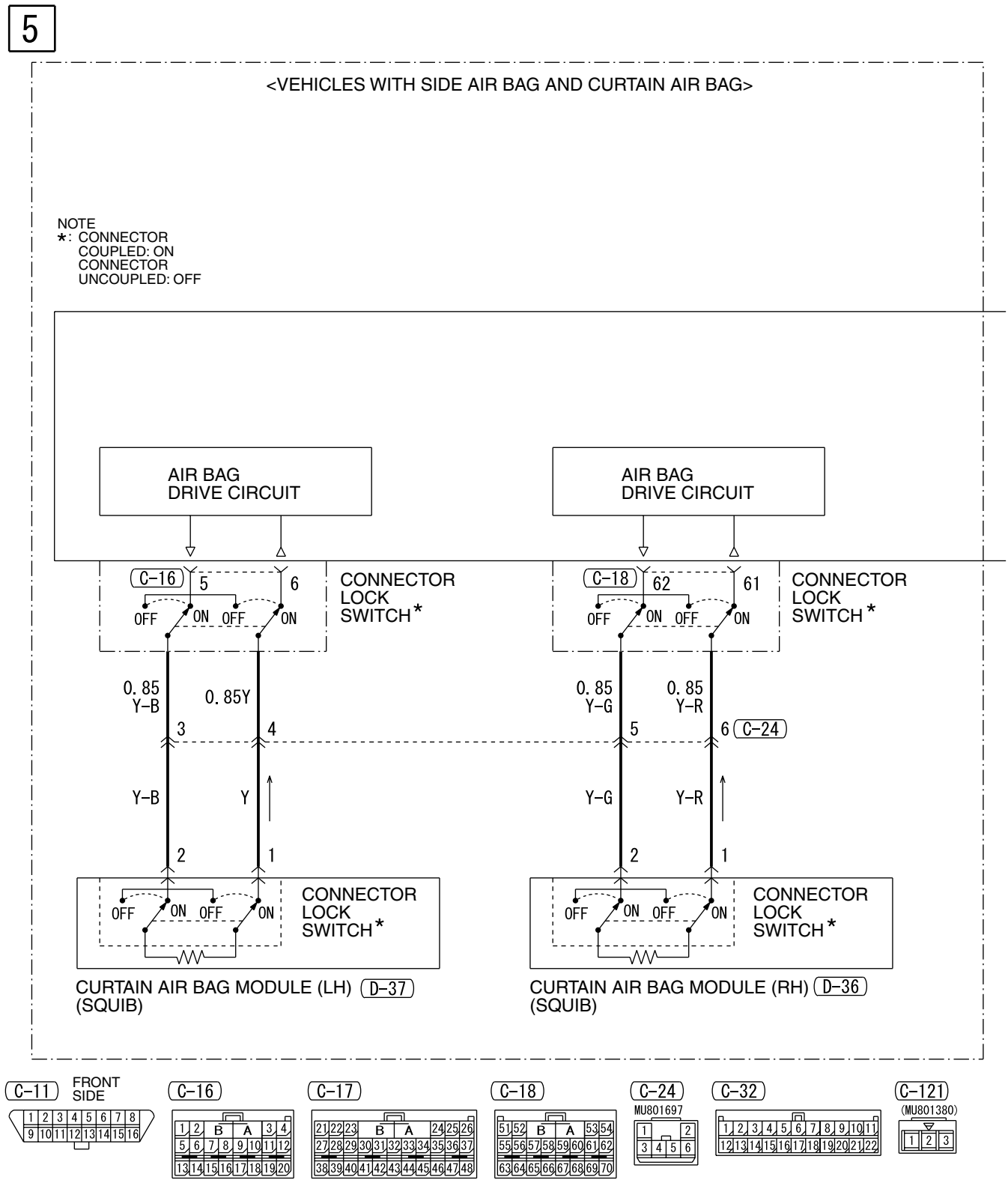

H4J15E10CA

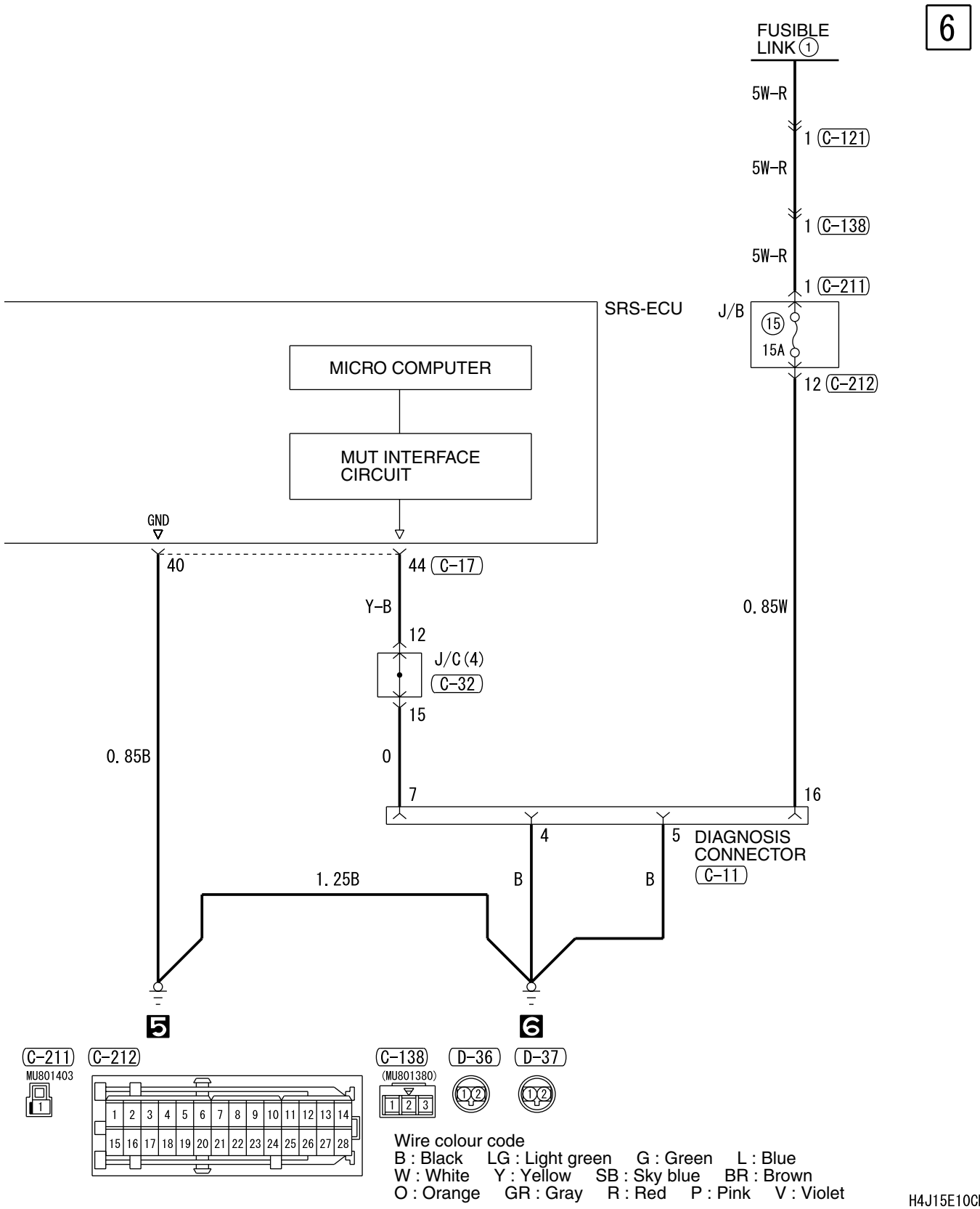
6
FUSIBLE LINK 1
5W-R
1 C-121
5W-R
1 C-138
5W-R
1 C-211
SRS-ECU
J/B
15
15A
12 C-212
MICRO COMPUTER
MUT INTERFACE CIRCUIT
GND
40
44 C-17
Y-B
0.85W
12
J/C (4)
C-32
15
0.85B
0
7
16
4
5
DIAGNOSIS CONNECTOR
C-11
1.25B
B
B
5
6
C-211
MU801403
C-212
C-138
(MU801380)
D-36
D-37
Wire colour code
B : Black LG : Light green G : Green L : Blue
W : White Y : Yellow SB : Sky blue BR : Brown
O : Orange GR : Gray R : Red P : Pink V : Violet
H4J15E10CB

SUPPLEMENTAL RESTRAINT SYSTEM (SRS) <RHD>

M1901009700888

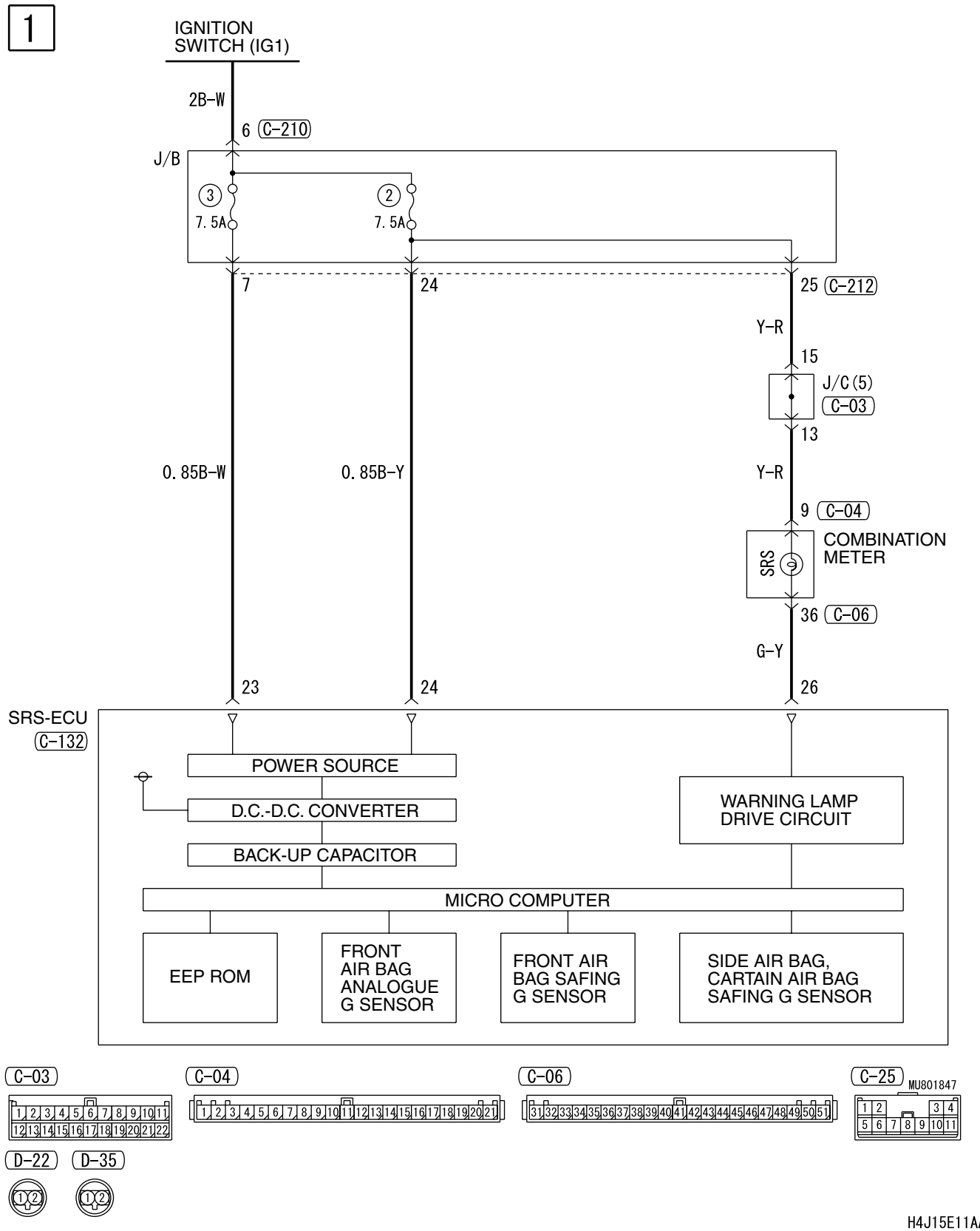

2

NOTE
*1: CONNECTOR COUPLED: ON
CONNECTOR UNCOUPLED: OFF
*2: SEDAN
*3: WAGON

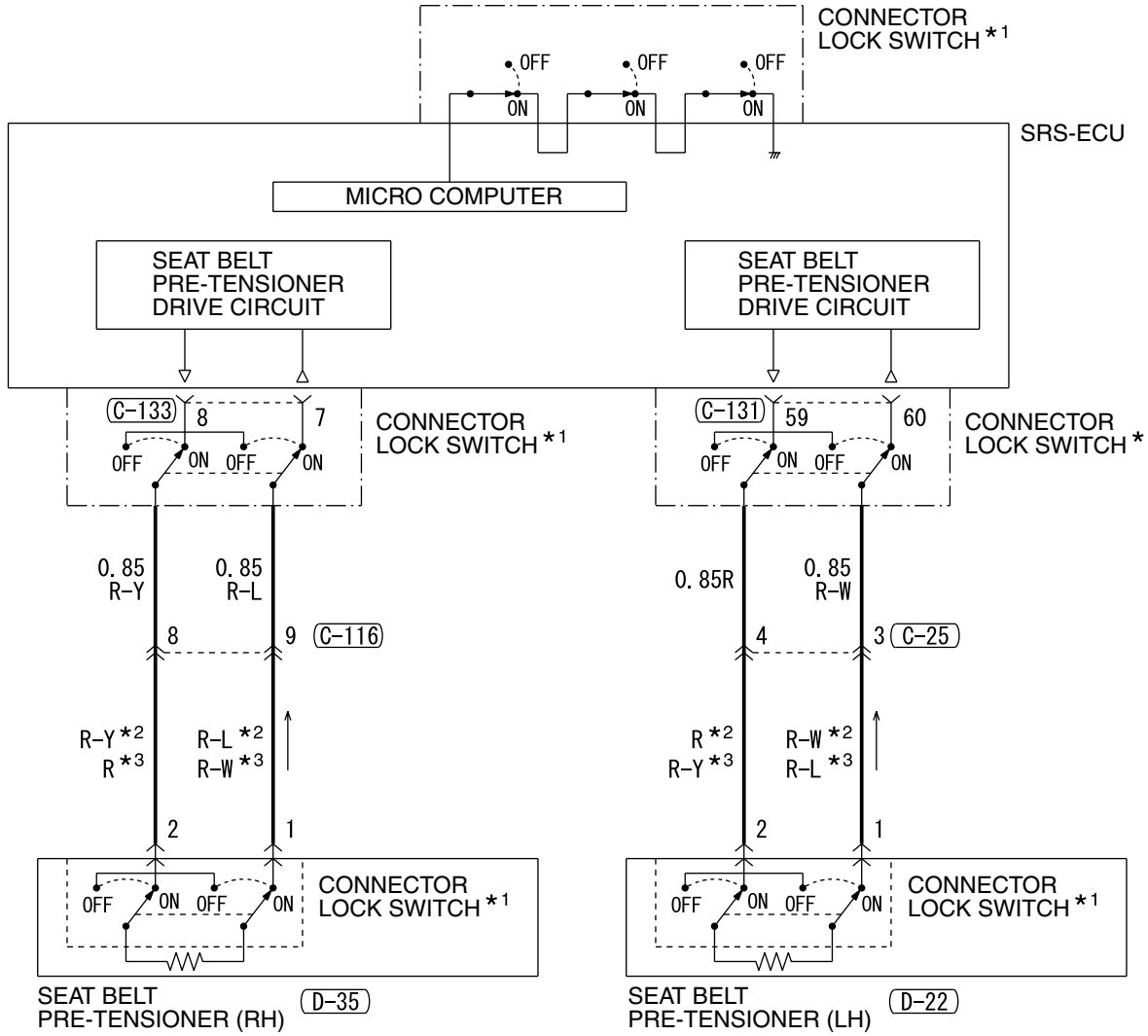

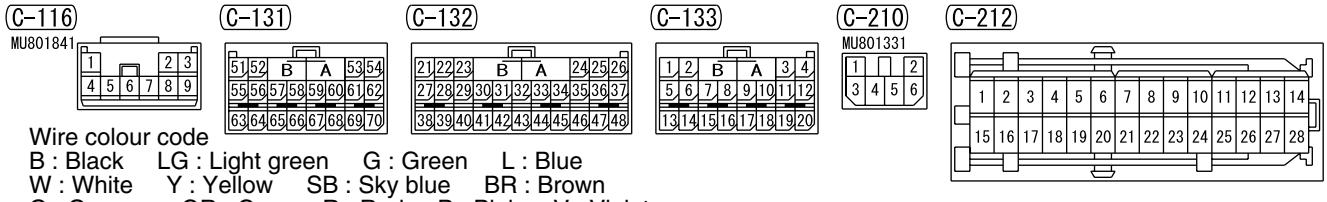

Wire colour code
B : Black LG : Light green G : Green L : Blue
W : White Y : Yellow SB : Sky blue BR : Brown
O : Orange GR : Gray R : Red P : Pink V : Violet

H4J15E11AB

SUPPLEMENTAL RESTRAINT SYSTEM (SRS) <RHD> (CONTINUED)

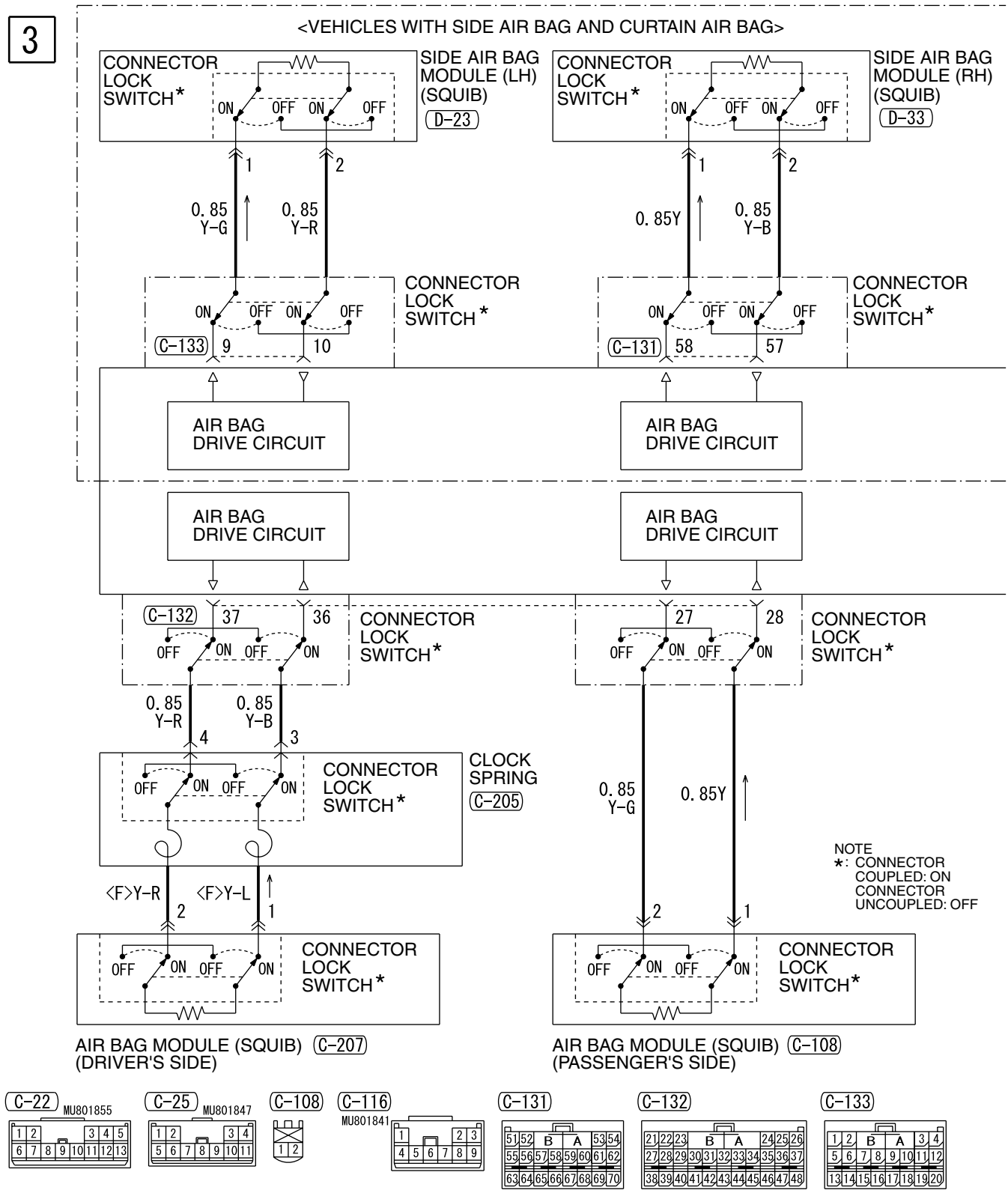

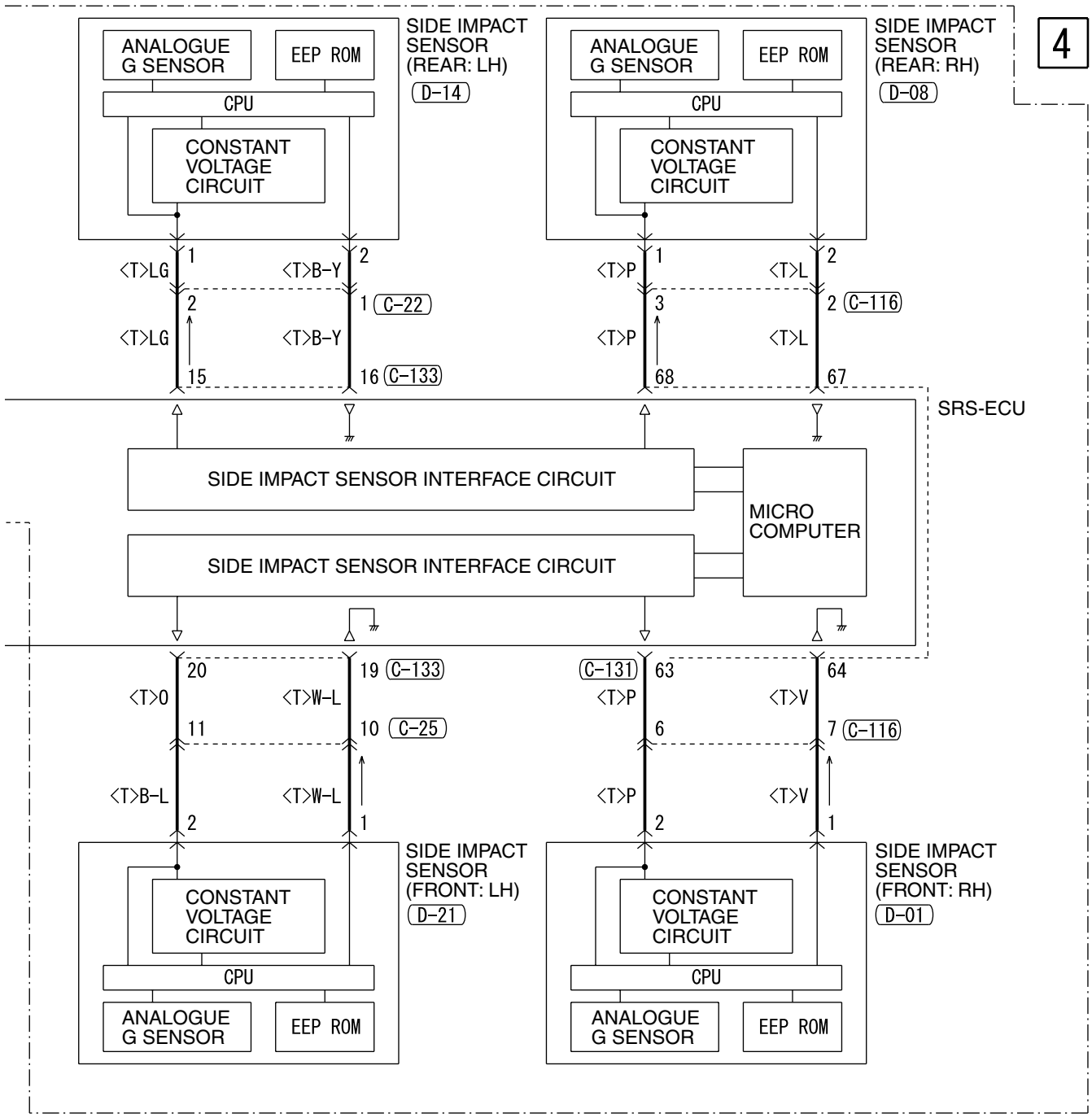

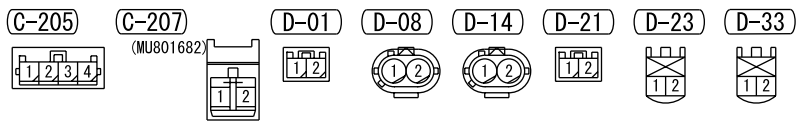

Wire colour code
B : Black LG : Light green G : Green L : Blue W : White Y : Yellow SB : Sky blue
BR : Brown O : Orange GR : Gray R : Red P : Pink V : Violet

H4J15E11BB

SUPPLEMENTAL RESTRAINT SYSTEM (SRS) <RHD> (CONTINUED)

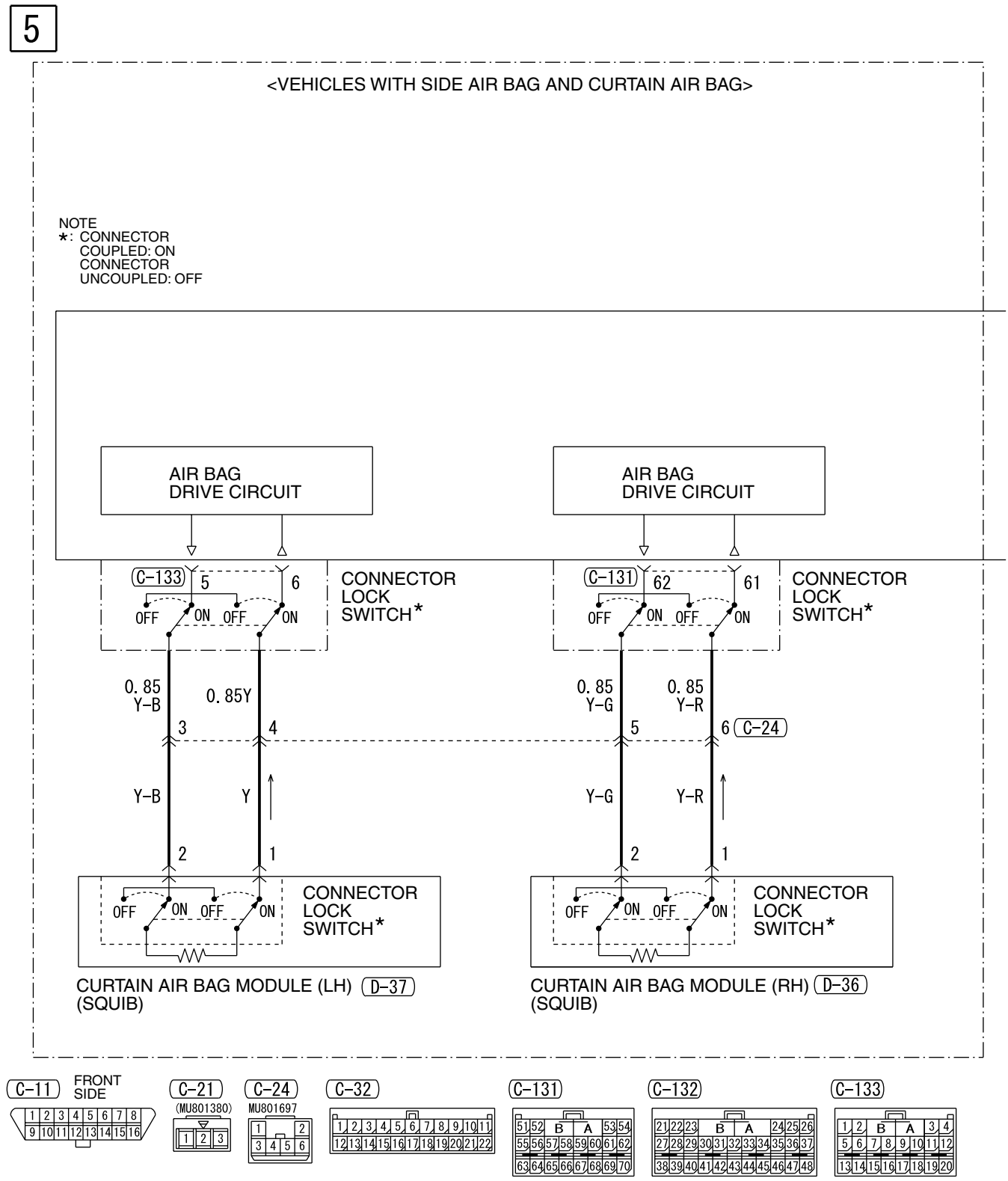

H4J15E11CA

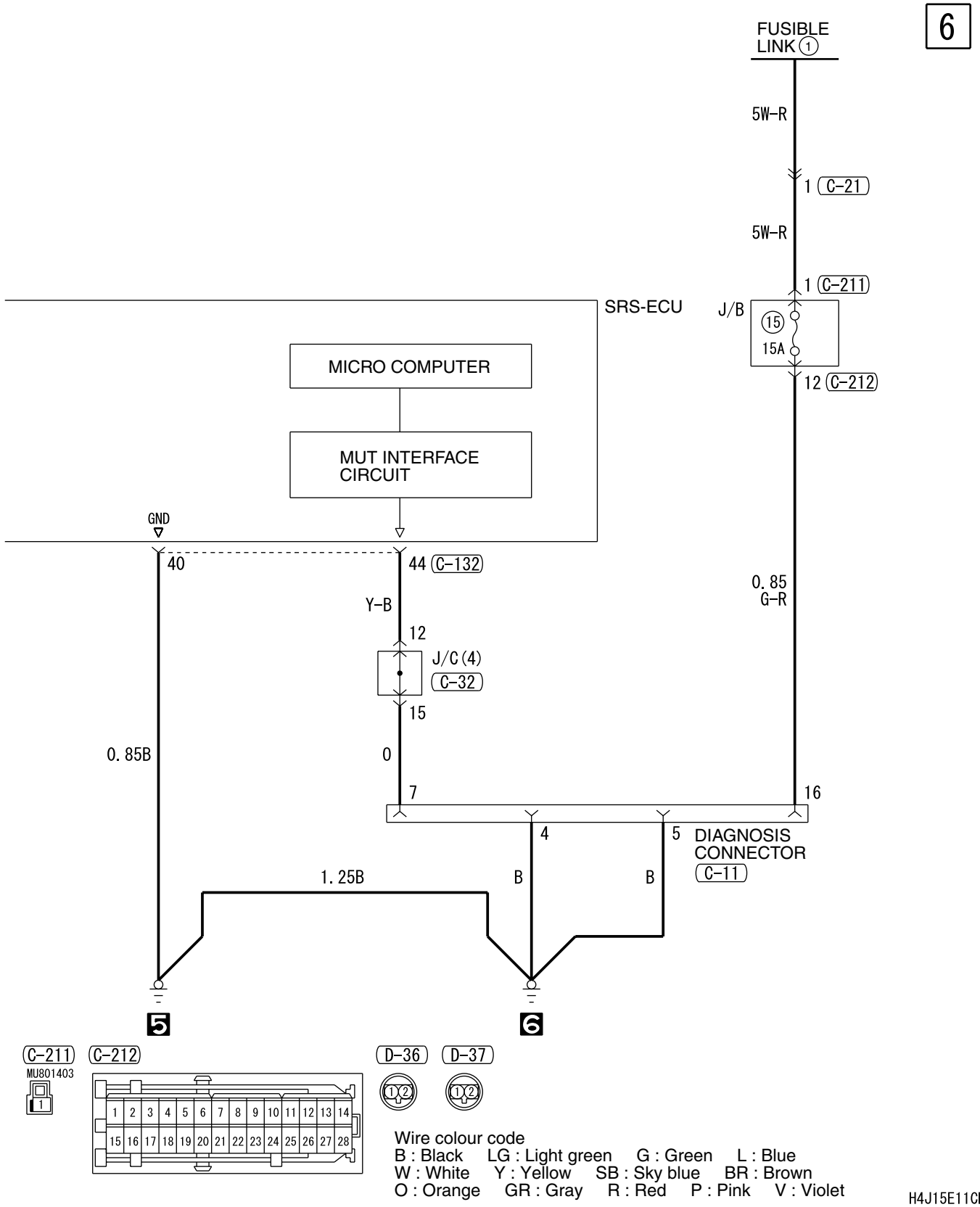
6
FUSIBLE LINK 1
5W-R
1 C-21
5W-R
1 C-211
SRS-ECU
J/B
15
15A
12 C-212
MICRO COMPUTER
MUT INTERFACE CIRCUIT
GND
40
44 C-132
Y-B
12
J/C (4)
C-32
15
0.85
G-R
0.85B
0
7
16
4
5
DIAGNOSIS CONNECTOR
C-11
1.25B
B
B
5
6
C-211
C-212
MU801403
D-36
D-37
Wire colour code
B : Black LG : Light green G : Green L : Blue
W : White Y : Yellow SB : Sky blue BR : Brown
O : Orange GR : Gray R : Red P : Pink V : Violet
H4J15E11CB

NOTES