GROUP 90

CIRCUIT DIAGRAMS

CONTENTS

Continued on next page

Continued on next page

J/B

M1901000201607

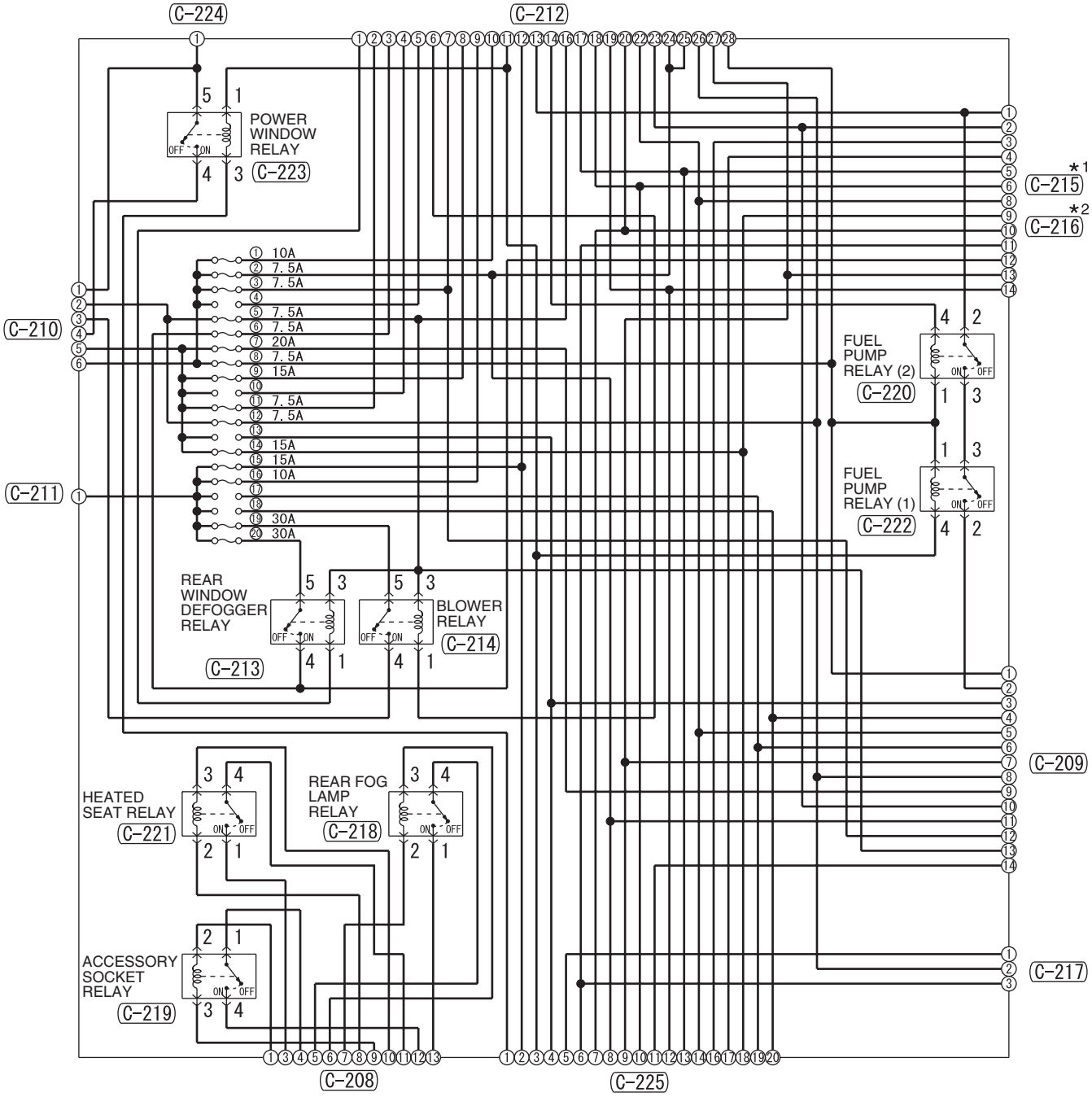

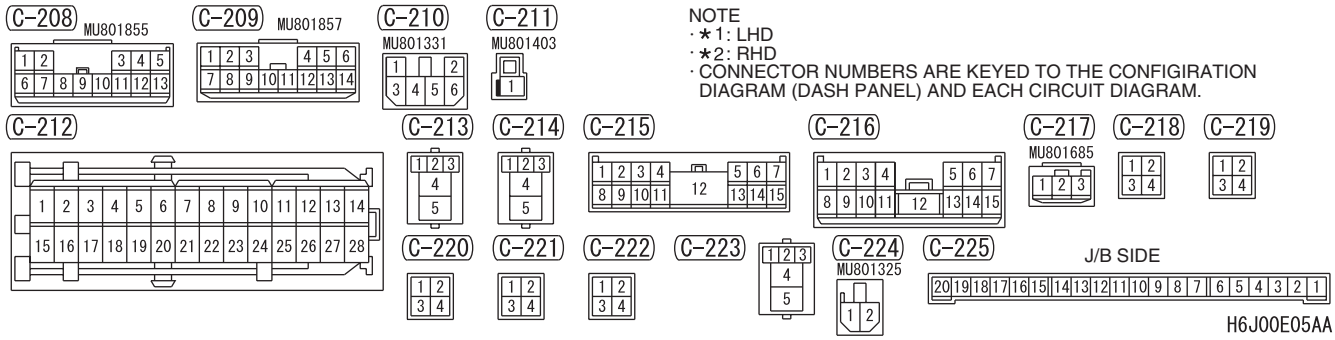

NOTE
- ★1: LHD
- ★2: RHD
- CONNECTOR NUMBERS ARE KEYED TO THE CONFIGIRATION DIAGRAM (DASH PANEL) AND EACH CIRCUIT DIAGRAM.

H6J00E05AA

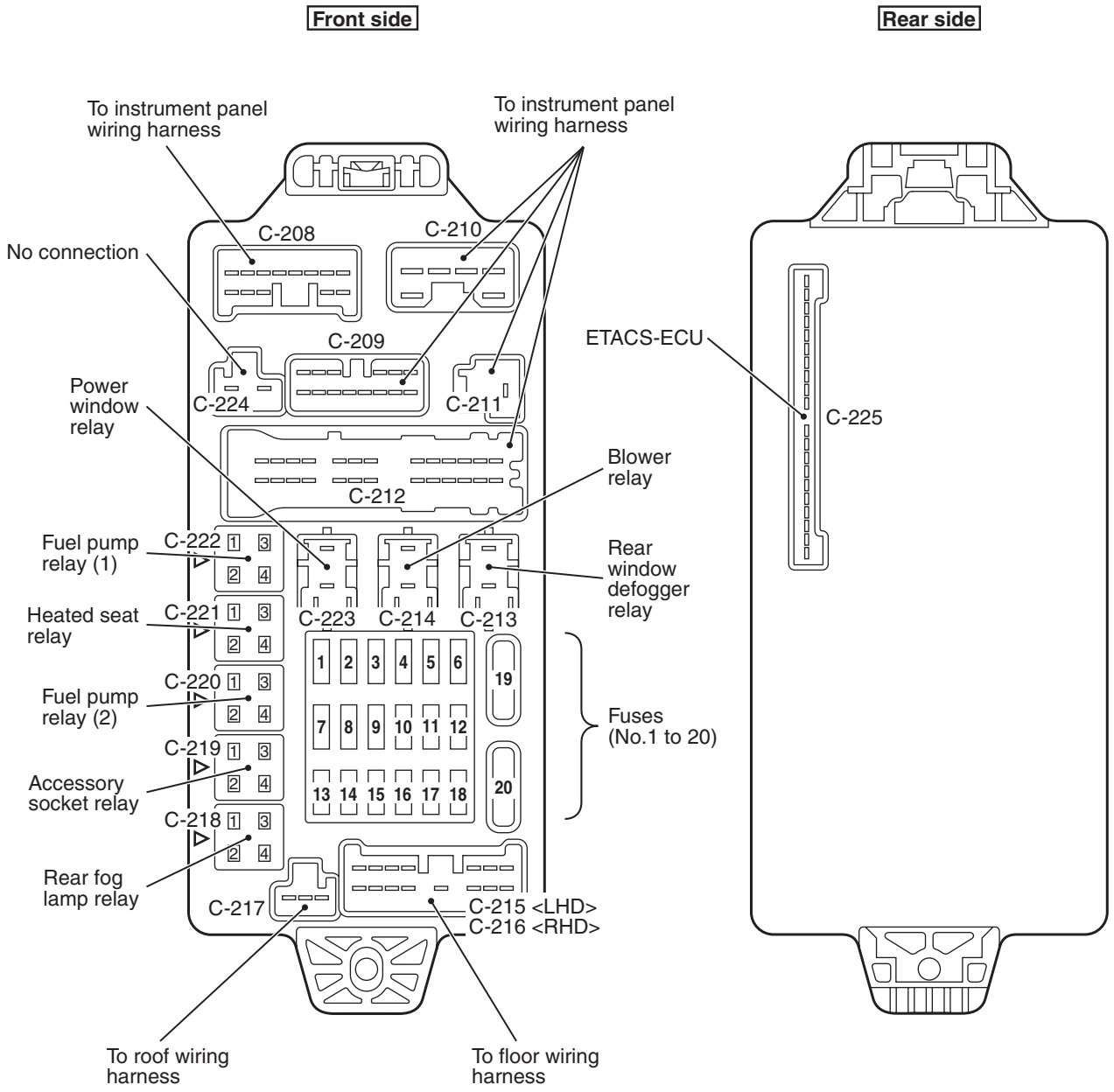

AC209083 AM

NOTE:

- *The triangle mark on the relay housing should face that on the J/B and the relay box.*

J/C

J/C <LHD>

M1901014201956

NOTE: IN ACTUAL VEHICLES, ANY OF THE TERMINALS CONNECTED IN J/C ARE USED. THE TERMINAL ARRANGEMENT DESCRIBED IN THE CIRCUIT DIAGRAM MAY NOT BE IDENTICAL TO THOSE OF THE VEHICLES.

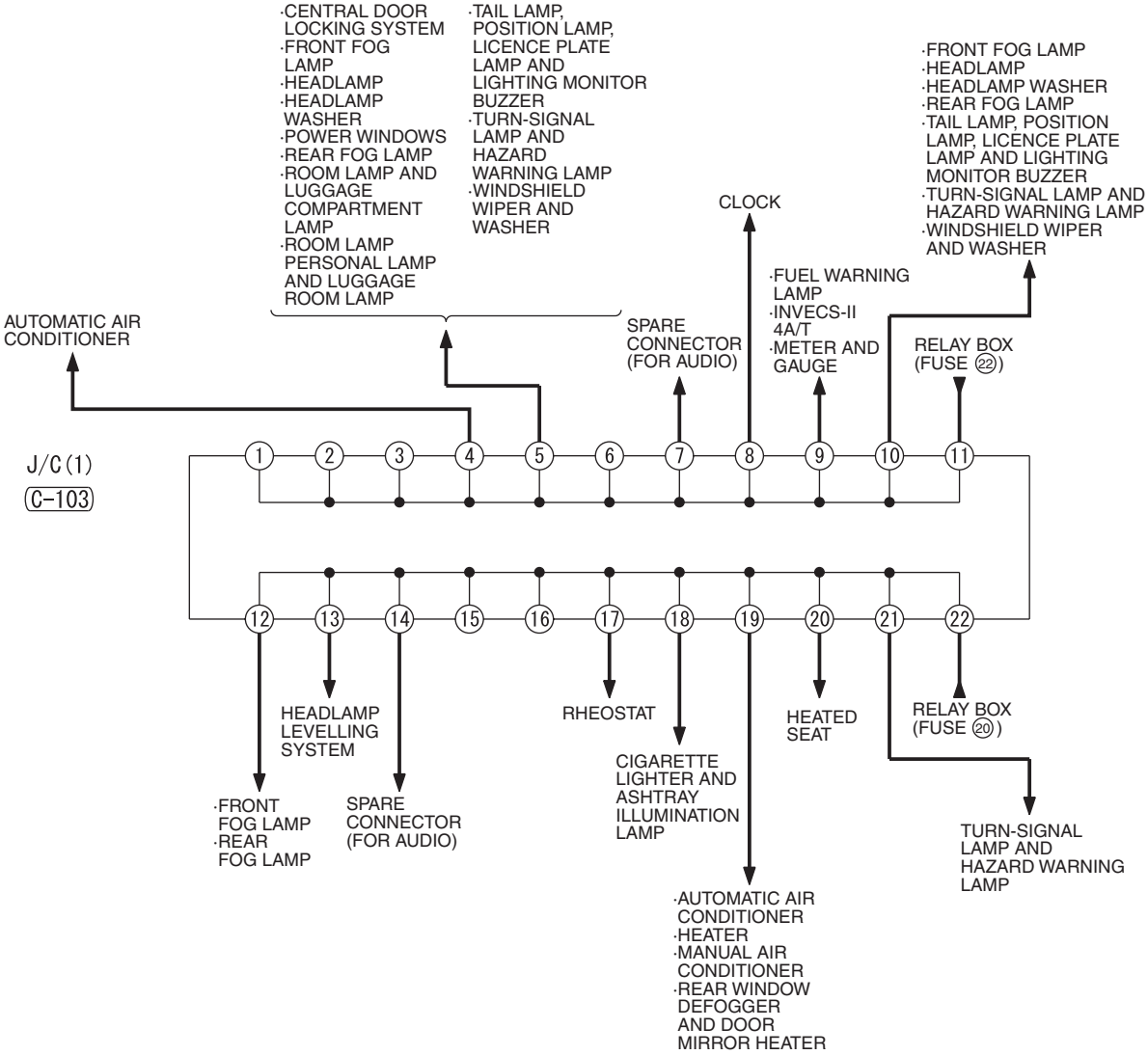

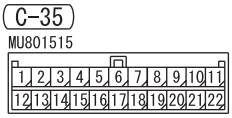

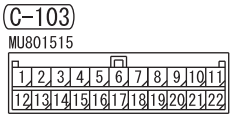

H6J00E06AA

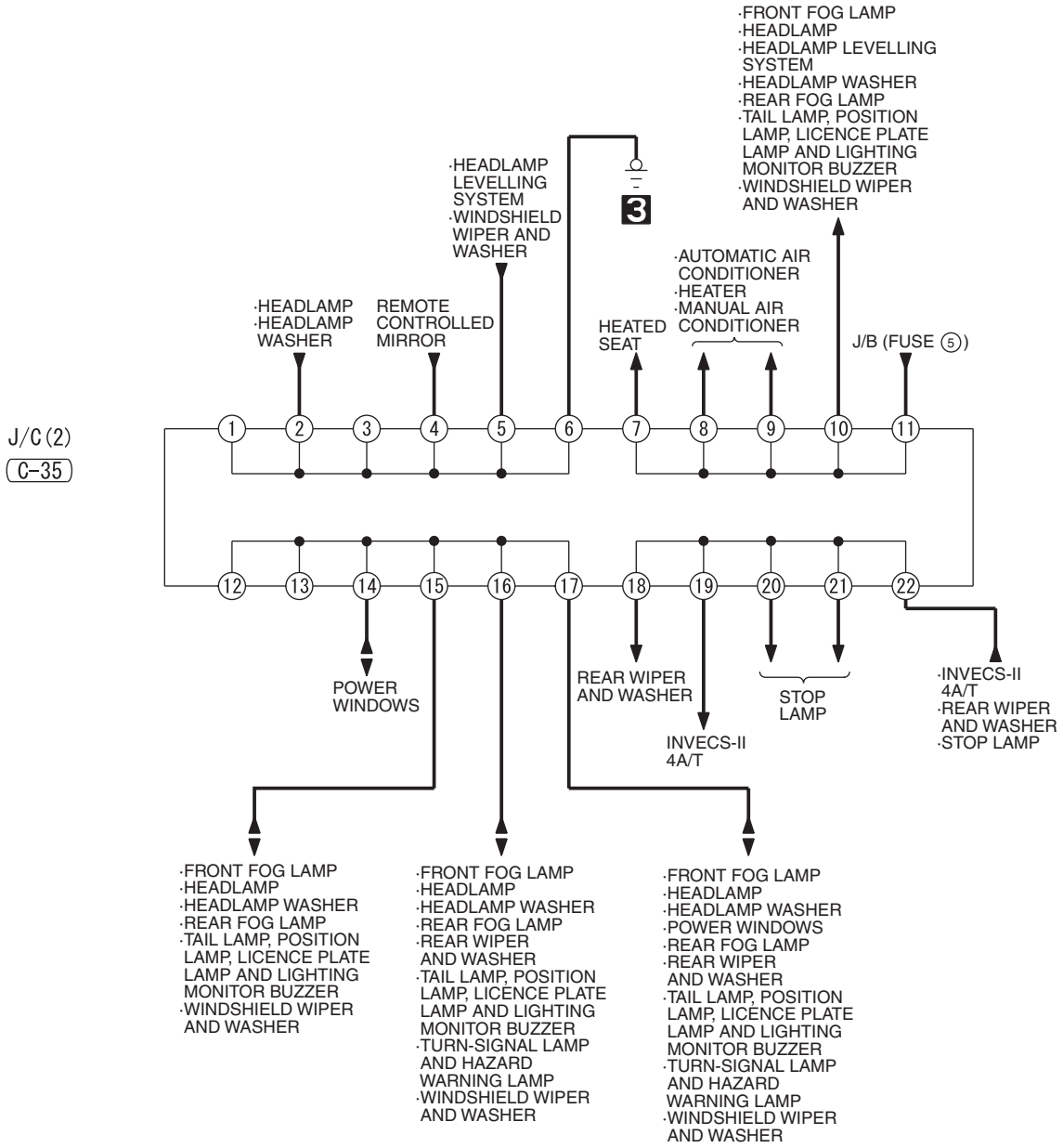
·FRONT FOG LAMP
·HEADLAMP
·HEADLAMP LEVELLING SYSTEM
·HEADLAMP WASHER
·REAR FOG LAMP
·TAIL LAMP, POSITION LAMP, LICENCE PLATE LAMP AND LIGHTING MONITOR BUZZER
·WINDSHIELD WIPER AND WASHER
·HEADLAMP LEVELLING SYSTEM
·WINDSHIELD WIPER AND WASHER
3
·AUTOMATIC AIR CONDITIONER
·HEATER
·MANUAL AIR CONDITIONER
·HEADLAMP
·HEADLAMP WASHER
REMOTE CONTROLLED MIRROR
HEATED SEAT
J/B (FUSE 5)
J/C (2)
C-35
1
2
3
4
5
6
7
8
9
10
11
12
13
14
15
16
17
18
19
20
21
22
POWER WINDOWS
REAR WIPER AND WASHER
INVECS-II 4A/T
STOP LAMP
·INVECS-II 4A/T
·REAR WIPER AND WASHER
·STOP LAMP
·FRONT FOG LAMP
·HEADLAMP
·HEADLAMP WASHER
·REAR FOG LAMP
·TAIL LAMP, POSITION LAMP, LICENCE PLATE LAMP AND LIGHTING MONITOR BUZZER
·WINDSHIELD WIPER AND WASHER
·FRONT FOG LAMP
·HEADLAMP
·HEADLAMP WASHER
·REAR FOG LAMP
·REAR WIPER AND WASHER
·TAIL LAMP, POSITION LAMP, LICENCE PLATE LAMP AND LIGHTING MONITOR BUZZER
·TURN-SIGNAL LAMP AND HAZARD WARNING LAMP
·WINDSHIELD WIPER AND WASHER
·FRONT FOG LAMP
·HEADLAMP
·HEADLAMP WASHER
·POWER WINDOWS
·REAR FOG LAMP
·REAR WIPER AND WASHER
·TAIL LAMP, POSITION LAMP, LICENCE PLATE LAMP AND LIGHTING MONITOR BUZZER
·TURN-SIGNAL LAMP AND HAZARD WARNING LAMP
·WINDSHIELD WIPER AND WASHER

H6J00E06AB

J/C <LHD> (CONTINUED)

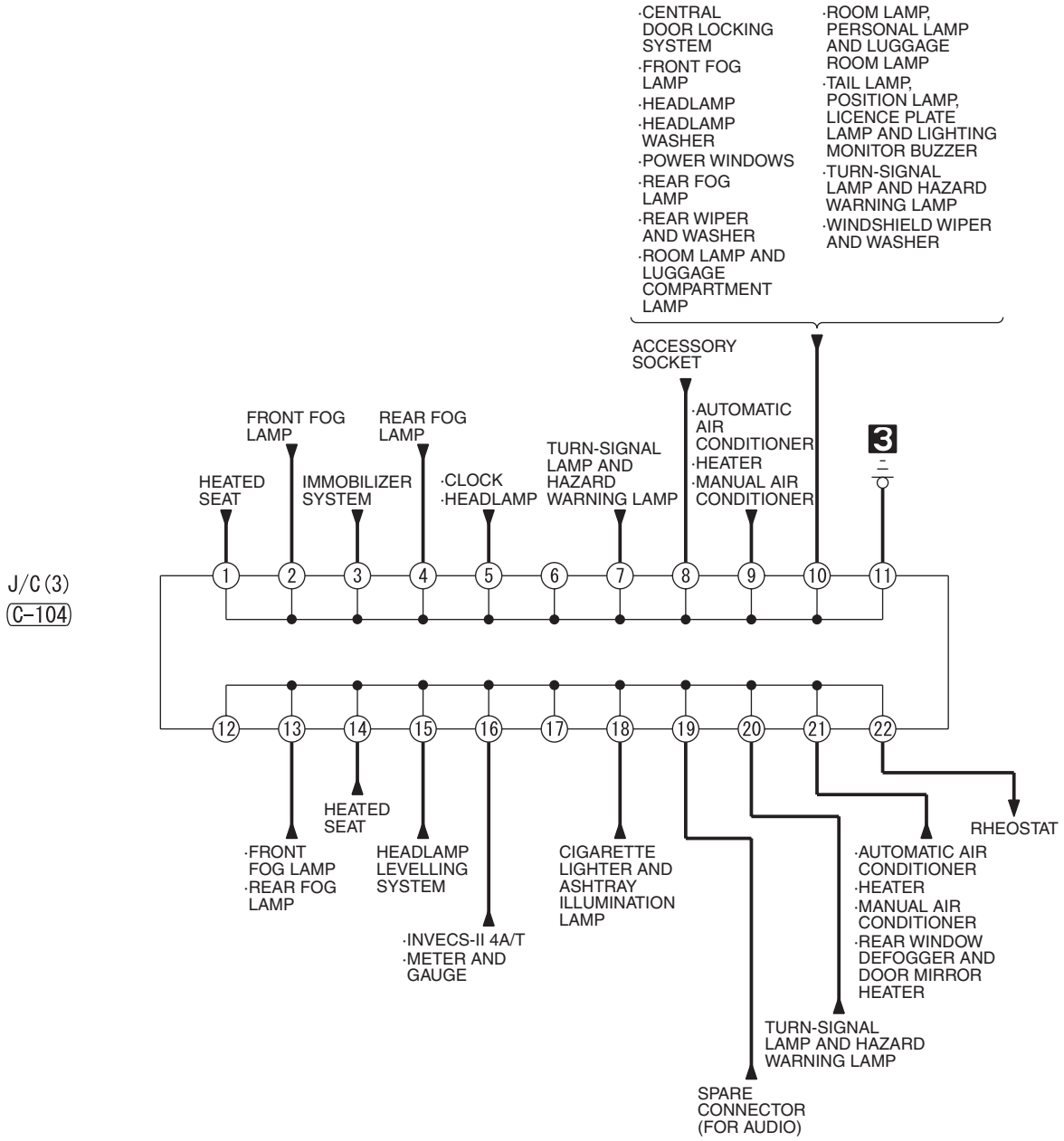

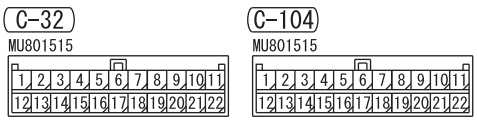

H6J00E06BA

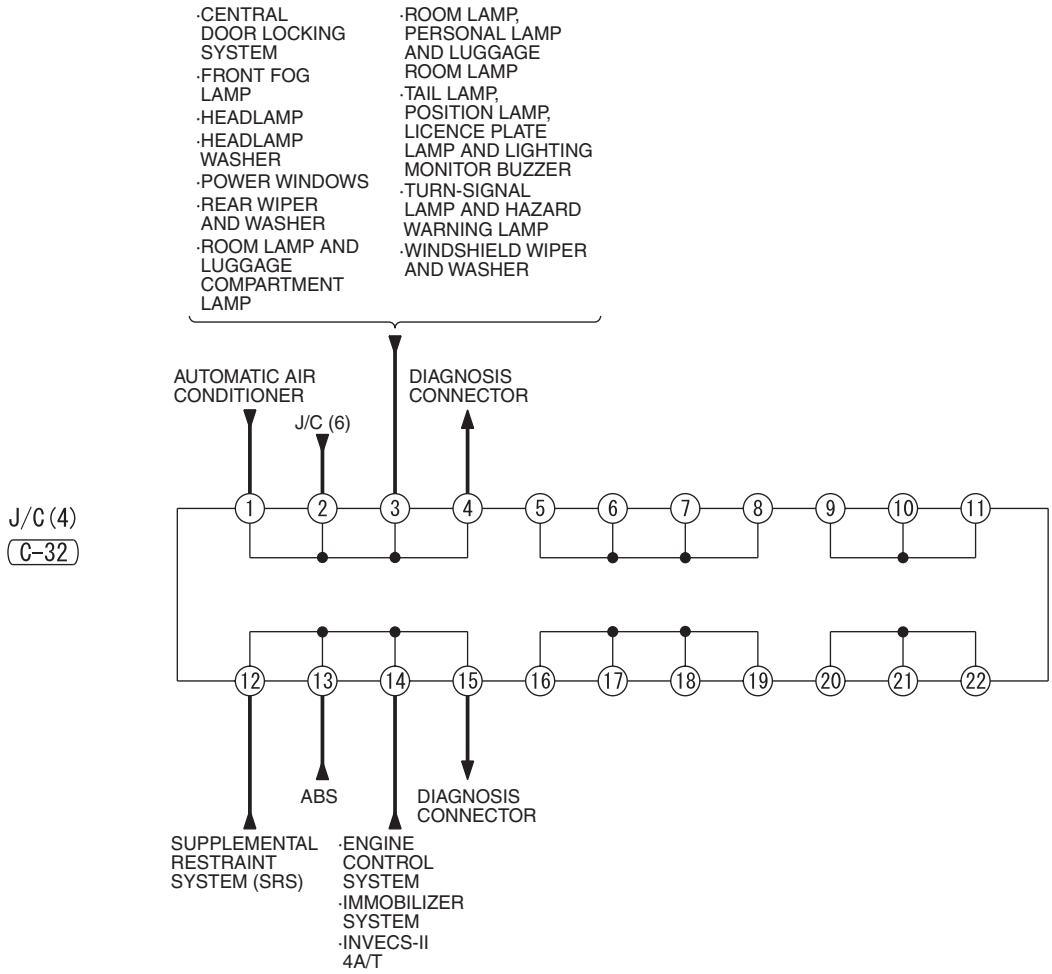
·CENTRAL DOOR LOCKING SYSTEM
·FRONT FOG LAMP
·HEADLAMP
·HEADLAMP WASHER
·POWER WINDOWS
·REAR WIPER AND WASHER
·ROOM LAMP AND LUGGAGE COMPARTMENT LAMP
·ROOM LAMP, PERSONAL LAMP AND LUGGAGE ROOM LAMP
·TAIL LAMP, POSITION LAMP, LICENCE PLATE LAMP AND LIGHTING MONITOR BUZZER
·TURN-SIGNAL LAMP AND HAZARD WARNING LAMP
·WINDSHIELD WIPER AND WASHER
AUTOMATIC AIR CONDITIONER
J/C (6)
DIAGNOSIS CONNECTOR
J/C (4)
C-32
1
2
3
4
5
6
7
8
9
10
11
12
13
14
15
16
17
18
19
20
21
22
ABS
DIAGNOSIS CONNECTOR
SUPPLEMENTAL RESTRAINT SYSTEM (SRS)
·ENGINE CONTROL SYSTEM
·IMMOBILIZER SYSTEM
·INVECS-II 4A/T

H6J00E06BB

J/C <LHD> (CONTINUED)

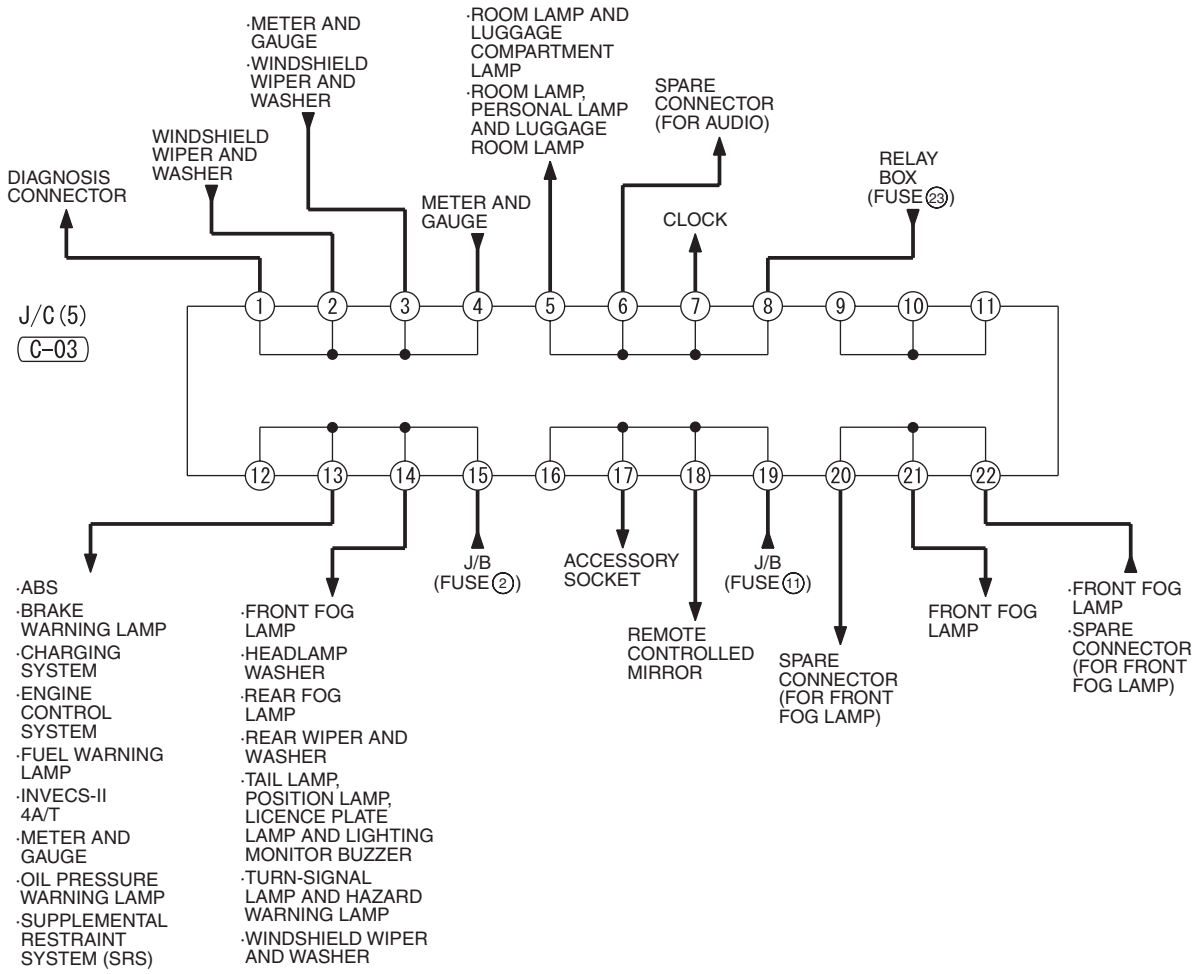

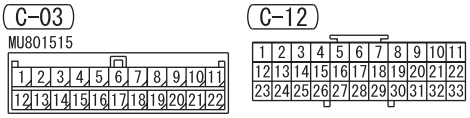

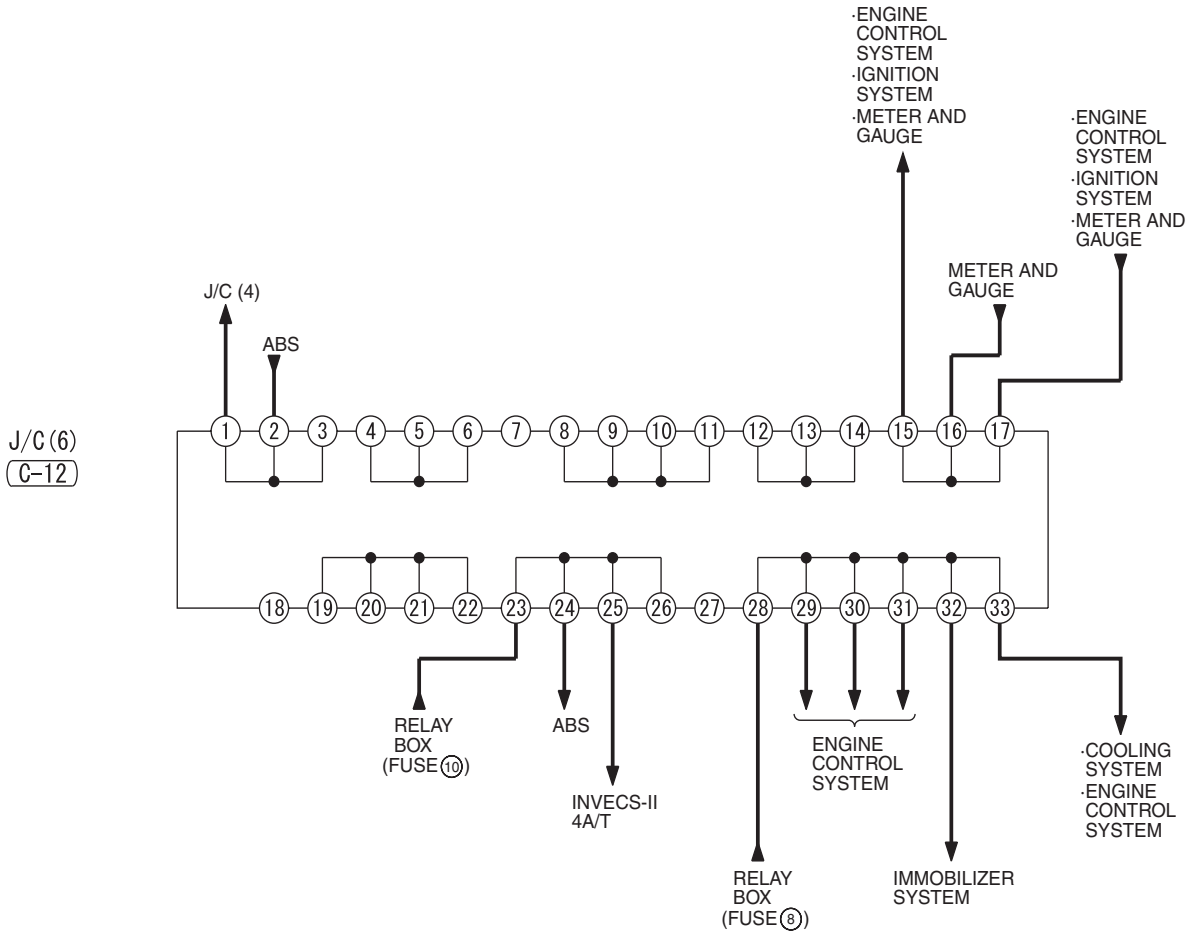
·ENGINE CONTROL SYSTEM
·IGNITION SYSTEM
·METER AND GAUGE
·ENGINE CONTROL SYSTEM
·IGNITION SYSTEM
·METER AND GAUGE
METER AND GAUGE
J/C (4)
ABS
J/C (6)
C-12
1 2 3 4 5 6 7 8 9 10 11 12 13 14 15 16 17
18 19 20 21 22 23 24 25 26 27 28 29 30 31 32 33
RELAY BOX (FUSE 10)
ABS
INVECS-II 4A/T
ENGINE CONTROL SYSTEM
·COOLING SYSTEM
·ENGINE CONTROL SYSTEM
RELAY BOX (FUSE 8)
IMMOBILIZER SYSTEM

J/C <RHD>

M1901014201967

NOTE: IN ACTUAL VEHICLES, ANY OF THE TERMINALS CONNECTED IN J/C ARE USED. THE TERMINAL ARRANGEMENT DESCRIBED IN THE CIRCUIT DIAGRAM MAY NOT BE IDENTICAL TO THOSE OF THE VEHICLES.

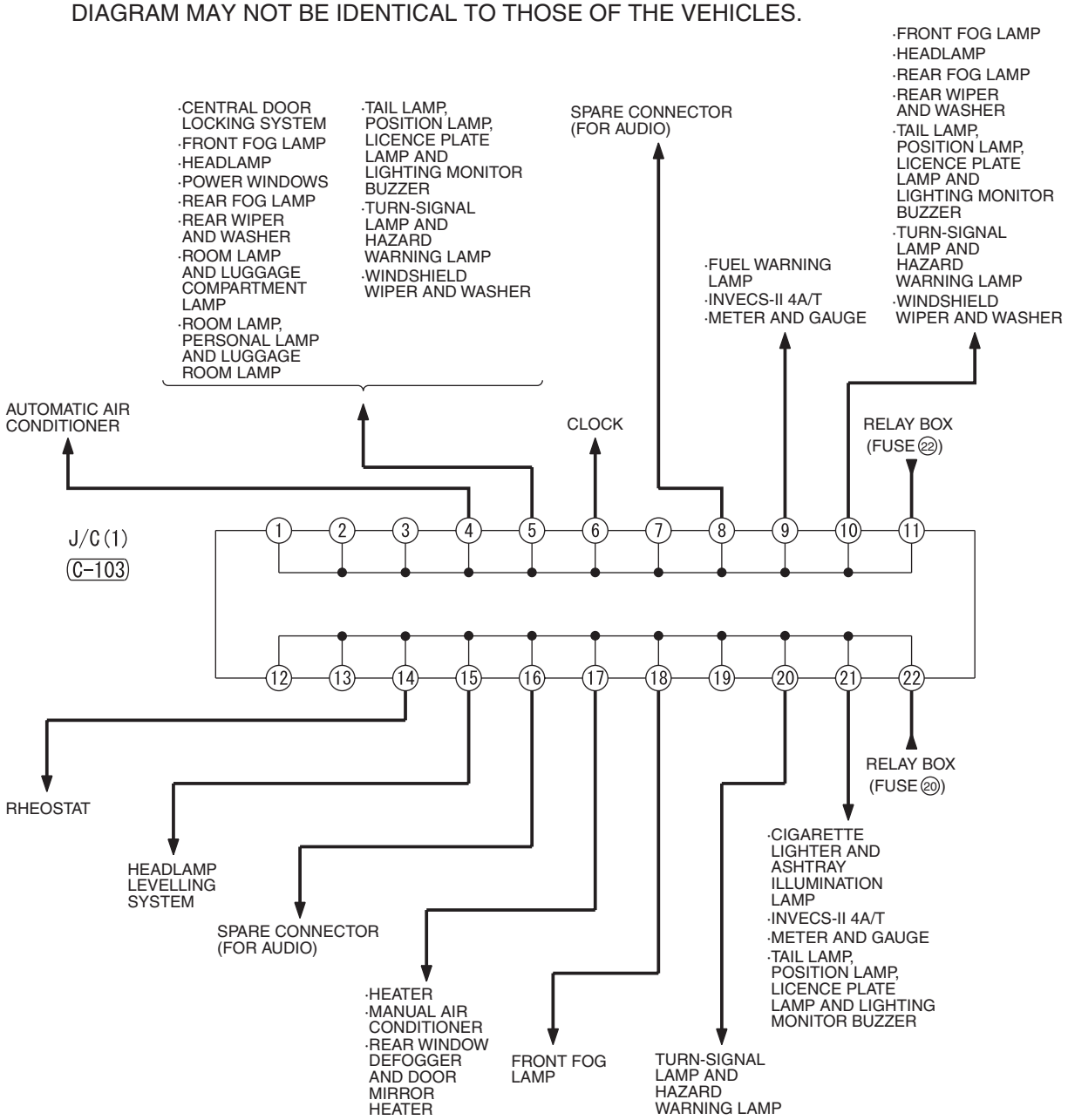

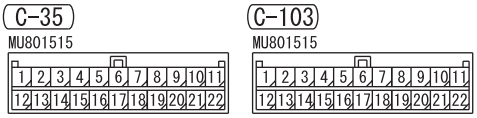

H6J00E07AA

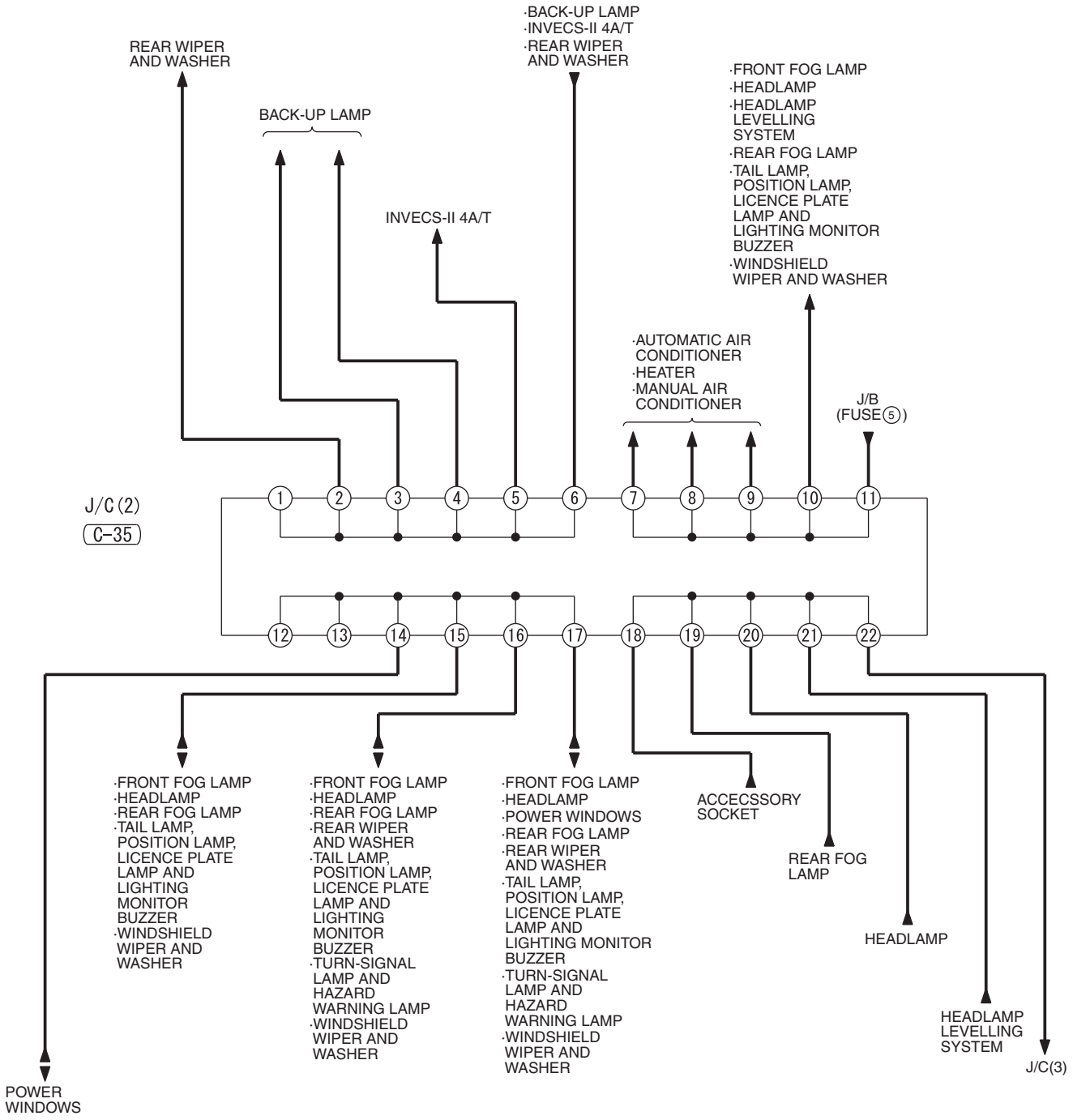
REAR WIPER AND WASHER
BACK-UP LAMP
INVECS-II 4A/T
·BACK-UP LAMP
·INVECS-II 4A/T
·REAR WIPER AND WASHER
·FRONT FOG LAMP
·HEADLAMP
·HEADLAMP LEVELLING SYSTEM
·REAR FOG LAMP
·TAIL LAMP, POSITION LAMP, LICENCE PLATE LAMP AND LIGHTING MONITOR BUZZER
·WINDSHIELD WIPER AND WASHER
·AUTOMATIC AIR CONDITIONER
·HEATER
·MANUAL AIR CONDITIONER
J/B (FUSE 5)
J/C (2)
C-35
1 2 3 4 5 6 7 8 9 10 11
12 13 14 15 16 17 18 19 20 21 22
·FRONT FOG LAMP
·HEADLAMP
·REAR FOG LAMP
·TAIL LAMP, POSITION LAMP, LICENCE PLATE LAMP AND LIGHTING MONITOR BUZZER
·WINDSHIELD WIPER AND WASHER
·FRONT FOG LAMP
·HEADLAMP
·REAR FOG LAMP
·REAR WIPER AND WASHER
·TAIL LAMP, POSITION LAMP, LICENCE PLATE LAMP AND LIGHTING MONITOR BUZZER
·TURN-SIGNAL LAMP AND HAZARD WARNING LAMP
·WINDSHIELD WIPER AND WASHER
·FRONT FOG LAMP
·HEADLAMP
·POWER WINDOWS
·REAR FOG LAMP
·REAR WIPER AND WASHER
·TAIL LAMP, POSITION LAMP, LICENCE PLATE LAMP AND LIGHTING MONITOR BUZZER
·TURN-SIGNAL LAMP AND HAZARD WARNING LAMP
·WINDSHIELD WIPER AND WASHER
ACCECSSORY SOCKET
REAR FOG LAMP
HEADLAMP
HEADLAMP LEVELLING SYSTEM
J/C(3)
POWER WINDOWS

H6J00E07AB

J/C <RHD> (CONTINUED)

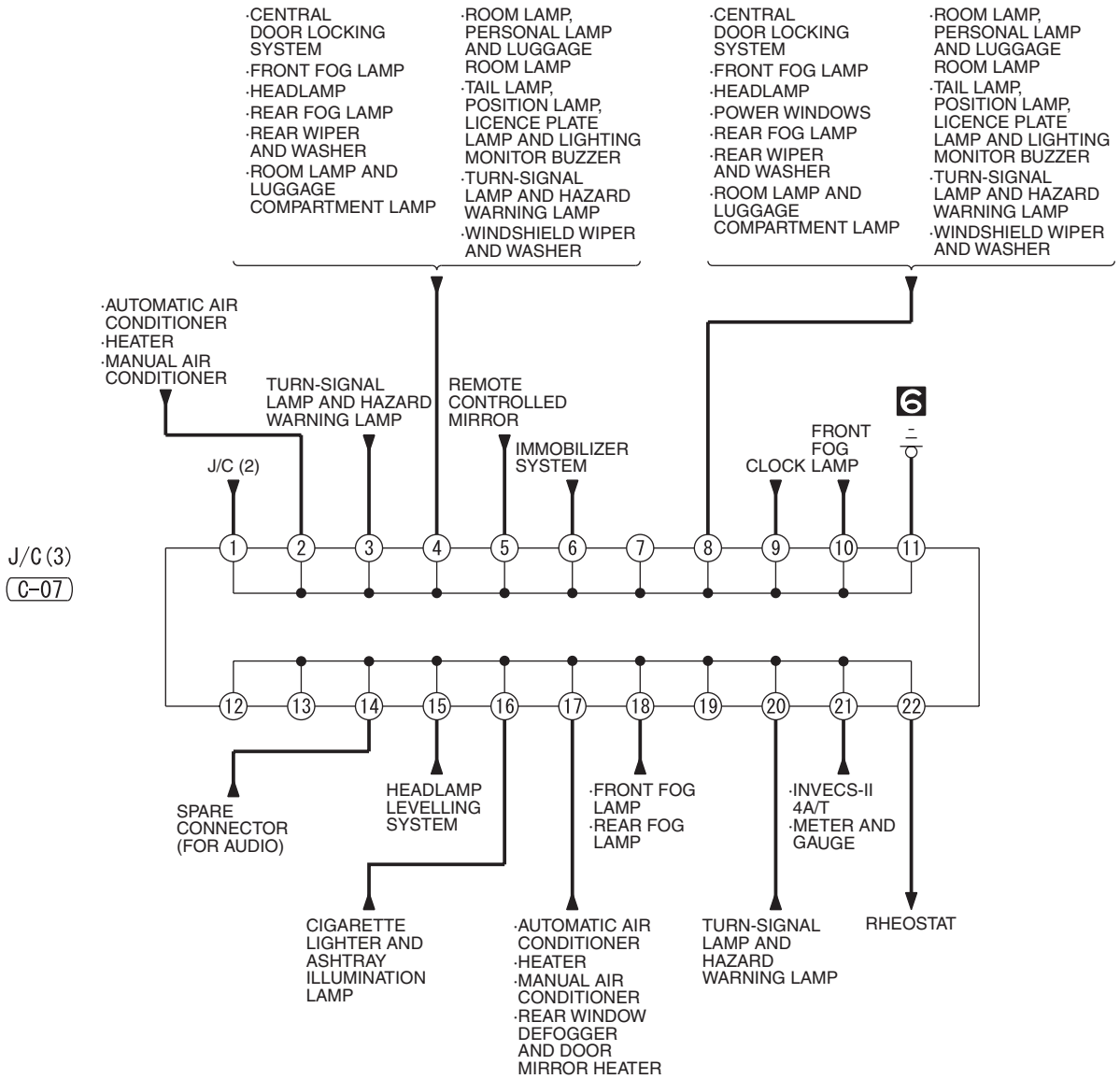

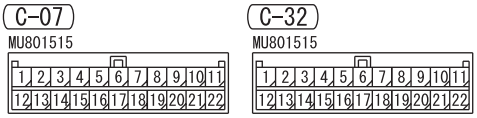

H6J00E07BA

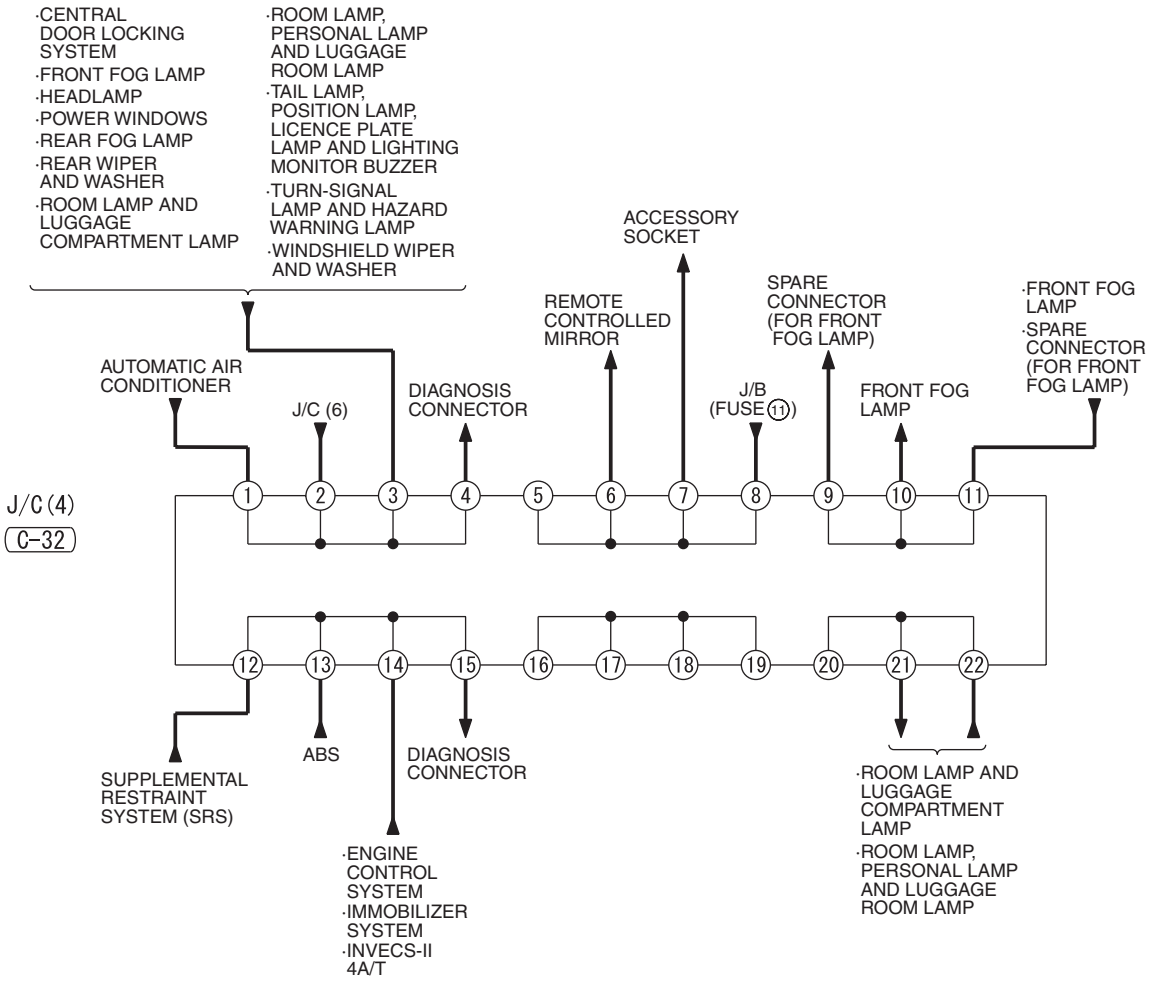
·CENTRAL DOOR LOCKING SYSTEM
·FRONT FOG LAMP
·HEADLAMP
·POWER WINDOWS
·REAR FOG LAMP
·REAR WIPER AND WASHER
·ROOM LAMP AND LUGGAGE COMPARTMENT LAMP
·ROOM LAMP, PERSONAL LAMP AND LUGGAGE ROOM LAMP
·TAIL LAMP, POSITION LAMP, LICENCE PLATE LAMP AND LIGHTING MONITOR BUZZER
·TURN-SIGNAL LAMP AND HAZARD WARNING LAMP
·WINDSHIELD WIPER AND WASHER
ACCESSORY SOCKET
REMOTE CONTROLLED MIRROR
SPARE CONNECTOR (FOR FRONT FOG LAMP)
·FRONT FOG LAMP
·SPARE CONNECTOR (FOR FRONT FOG LAMP)
AUTOMATIC AIR CONDITIONER
J/C (6)
DIAGNOSIS CONNECTOR
J/B (FUSE 11)
FRONT FOG LAMP
J/C (4)
C-32
1
2
3
4
5
6
7
8
9
10
11
12
13
14
15
16
17
18
19
20
21
22
SUPPLEMENTAL RESTRAINT SYSTEM (SRS)
ABS
DIAGNOSIS CONNECTOR
·ENGINE CONTROL SYSTEM
·IMMOBILIZER SYSTEM
·INVECS-II 4A/T
·ROOM LAMP AND LUGGAGE COMPARTMENT LAMP
·ROOM LAMP, PERSONAL LAMP AND LUGGAGE ROOM LAMP

J/C <RHD> (CONTINUED)

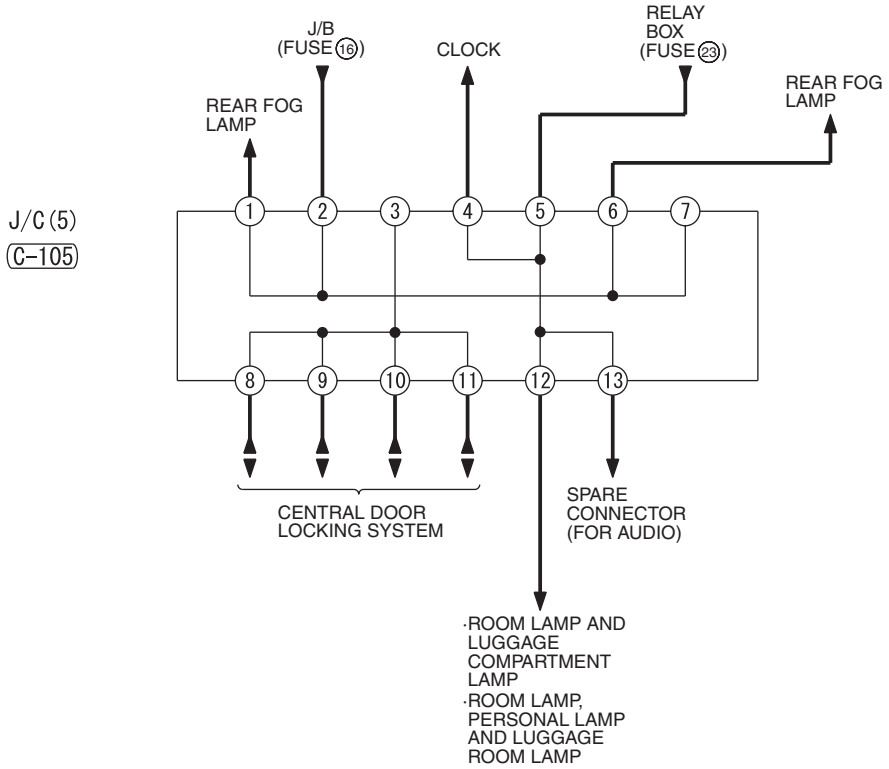

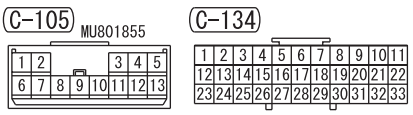

H6J00E07CA

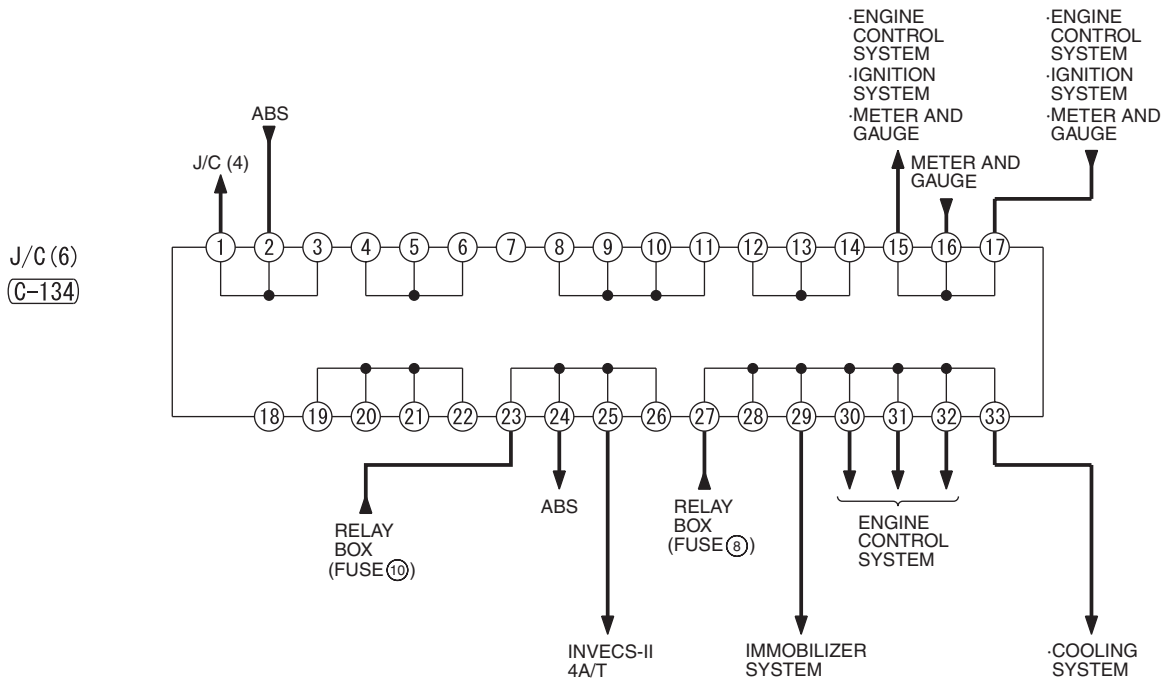
·ENGINE CONTROL SYSTEM
·IGNITION SYSTEM
·METER AND GAUGE
·ENGINE CONTROL SYSTEM
·IGNITION SYSTEM
·METER AND GAUGE
ABS
J/C (4)
METER AND GAUGE
J/C (6)
C-134
1 2 3 4 5 6 7 8 9 10 11 12 13 14 15 16 17
18 19 20 21 22 23 24 25 26 27 28 29 30 31 32 33
RELAY BOX (FUSE 10)
ABS
RELAY BOX (FUSE 8)
ENGINE CONTROL SYSTEM
INVECS-II 4A/T
IMMOBILIZER SYSTEM
·COOLING SYSTEM

H6J00E07CB

CENTRALIZED JUNCTION

M1901000301477

FUSIBLE LINK AND FUSE

ENGINE COMPARTMENT

No.	Power supply circuit	Name	Rated capacity (A)	Housing colour	Load circuit
1	Battery/ Alternator (Fusible link No.26)	Fusible link	60	Yellow	Fuse No.15, 16, 18, 19, 20 (in junction block) circuit
2			50	Red	Fan controller
3			60	Yellow	ABS-ECU
4			40	Green	Ignition switch circuit
5			30	Pink	Power window main switch and power window sub switch
6		Fuse	15	Blue	Front fog lamp, front fog lamp indicator lamp, front fog lamp relay and spare connector (for front fog lamp)
7			10	Red	Horn relay and horn
8			20	Yellow	Air cleaner air flow sensor, camshaft position sensor, emission solenoid valve (EGR system), emission solenoid valve (purge control system), engine-A/T-ECU, engine-ECU, engine control oxygen sensor, engine control relay, engine crank angle sensor, fan control relay, fuel injector, ignition coil relay, immobilizer-ECU and throttle body idle speed control servo
9			10	Red	A/C compressor
10			15	Blue	ABS-ECU, engine-A/T-ECU, high mount stop lamp and rear combination lamp
11			15	Blue	Accessory socket
12			7.5	Brown	Alternator
13			10	Red	ETACS-ECU, front turn signal lamp, rear combination lamp, side turn signal lamp and turn signal indicator lamp
14			20	Yellow	A/T control solenoid valve assembly and engine-A/T-ECU
15			15	Blue	Fuel pump
16	Front-ECU (Headlamp relay: HI)		10	Red	Headlamp (RH)
17			10	Red	Headlamp (LH) and high beam indicator lamp
18	Front-ECU (Headlamp relay: LO)		10	Red	Headlamp (RH)
19			10	Red	Headlamp (LH), headlamp assembly and headlamp levelling switch

No.	Power supply circuit	Name	Rated capacity (A)	Housing colour	Load circuit
20	Front-ECU (Tail lamp relay)	Fuse	7.5	Brown	A/C-ECU, ashtray illumination lamp, cigarette lighter illumination lamp, combination meter, fog lamp switch, front turn signal lamp, hazard warning switch, headlamp assembly (RH), headlamp levelling switch, heated seat switch, heater control unit, licence plate lamp, rear combination lamp, rheostat, side turn signal lamp and spare connector (for audio)
21			7.5	Brown	Combination meter, headlamp assembly (LH), licence plate lamp, position lamp (LH) and rear combination lamp (LH)
22	Battery/ Alternator (Fusible link No.26)		10	Red	Combination meter, column switch, ETACS-ECU and front-ECU
23	Ignition switch (ACC)		10	Red	Clock, ETACS-ECU and spare connector (for audio)
24	–		–	–	–
25	Battery/ Alternator (Fusible link No.26)		20	Yellow	Heated seat assembly and heated seat switch
26	Alternator	Fusible link	100 <4G1> 120 <4G6>	–	Battery, fusible link No.1, 2, 3, 4, 5, fuse No.6, 7, 8, 9, 10, 11, 12, 13, 14, 15, 22 (relay box) and front-ECU

(Relay box in engine compartment)

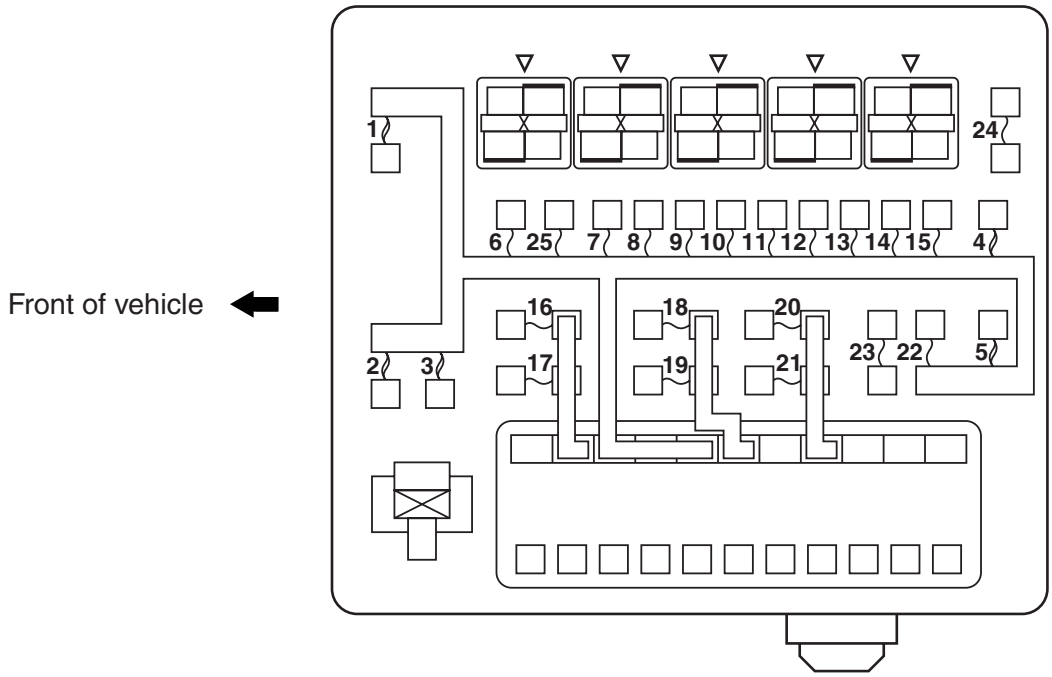

AC208462 AO

(Connected directly to battery positive terminal)

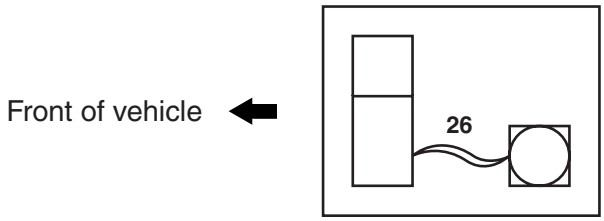

AC207745 AF

PASSENGER COMPARTMENT

No.	Power supply circuit	Name	Rated capacity (A)	Housing colour	Load circuit
1	Ignition switch (IG1)	Fuse	10	Red	Capacitor and ignition coil
2			7.5	Brown	ABS warning lamp, brake warning lamp, charging warning lamp, check engine warning lamp, column switch, combination meter, ETACS-ECU, low fuel warning lamp, oil pressure warning lamp, SRS air bag warning lamp, SRS-ECU and vehicle speed sensor
3			7.5	Brown	A/T control relay, combination meter, engine-A/T-ECU, ETACS-ECU, input shaft speed sensor, output shaft speed sensor, rear combination lamp and SRS-ECU
4			–	–	–
5	Ignition switch (IG2)		7.5	Brown	A/C compressor relay, A/C-ECU, blower relay, rear window defogger relay, front-ECU, heated seat relay, heater control unit and outside/inside air selection damper control motor
6	Rear window defogger relay		7.5	Brown	Remote controlled mirror
7	Ignition switch (ACC)		20	Yellow	Front-ECU and windshield wiper motor
8	Ignition switch (IG1)		7.5	Brown	Engine-A/T-ECU, engine-ECU, fuel pump relay (1) and fuel pump relay (2)
9	Ignition switch (ACC)		15	Blue	Cigarette lighter
10			–	–	–
11			7.5	Brown	Accessory socket relay and Remote controlled mirror
12	Ignition switch (IG2)		7.5	Brown	ABS-ECU
13	Ignition switch (ACC)		–	–	–
14			15	Blue	ETACS-ECU and rear wiper motor

No.	Power supply circuit	Name	Rated capacity (A)	Housing colour	Load circuit
15	Fusible link No.1	Fuse	15	Blue	Diagnosis connector
16			10	Red	Rear fog lamp, rear fog lamp indicator lamp and rear fog lamp relay
17			–	–	–
18			–	–	–
19			30	Green	A/C-ECU, blower motor, heater control unit and resistor
20			30	Green	Rear window defogger

(in junction block)

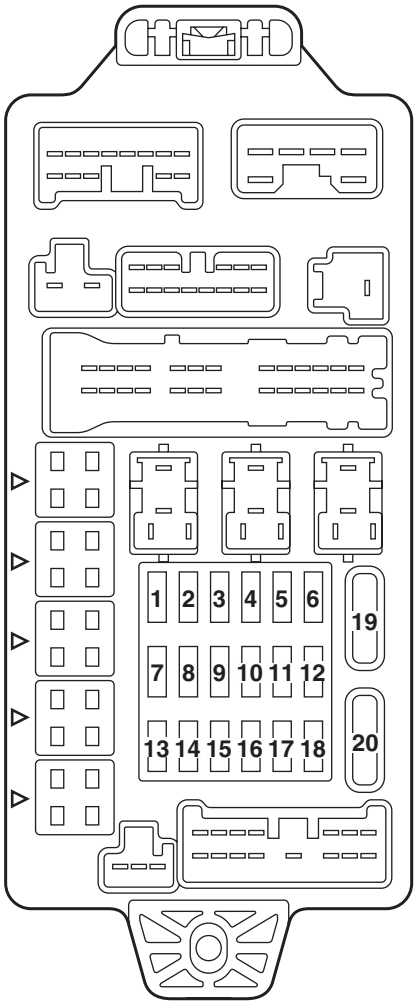

AC209082 AE

CENTRALIZED RELAY

Connector No.	Name	Connector No.	Name
A-04X	Front fog lamp relay	B-10X	Engine speed detection connector
A-05X	Horn relay	B-11X	–
A-06X	–	B-12X	–
A-07X	–	B-13X	–
A-08X	–	B-14X	Ignition coil relay
A-09X	Fan control relay	B-15X	A/T control relay
A-10X	Front-ECU	B-16X	Engine control relay
A-11X	Front-ECU	B-17X	A/C compressor relay

(Relay box in engine compartment)

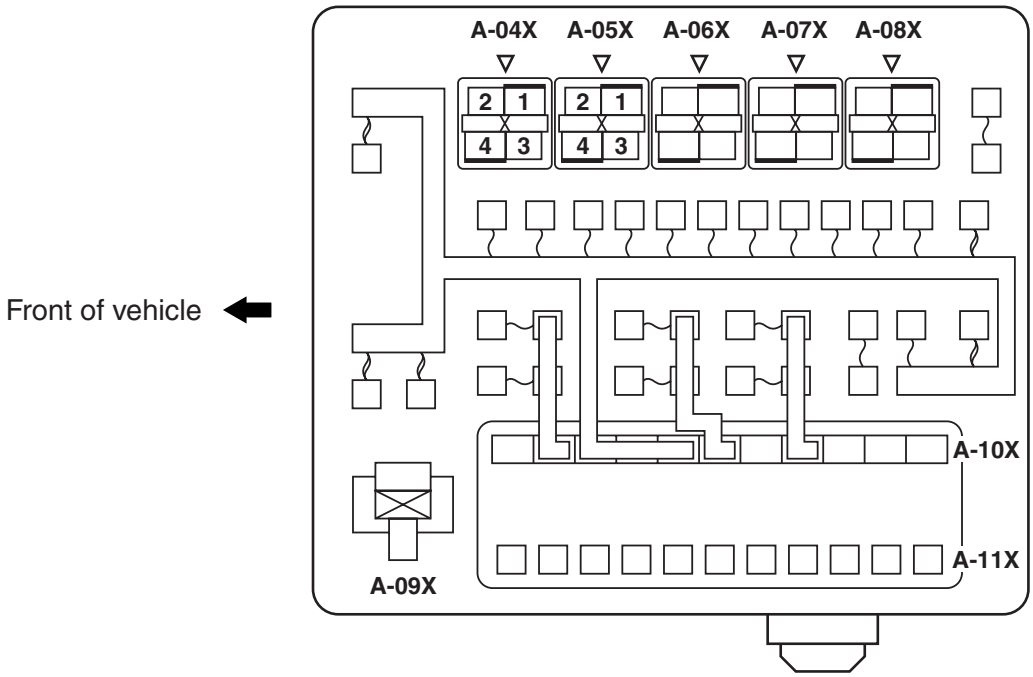

AC208462 AP

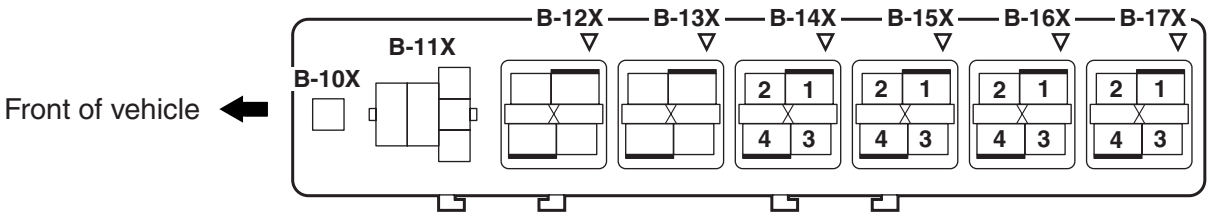

AC208464 AJ

NOTE:

- *The triangle mark on the relay housing should face that on the J/B and the relay box.*

NOTES

POWER DISTRIBUTION SYSTEM

POWER DISTRIBUTION SYSTEM <LHD>

M1901000402002

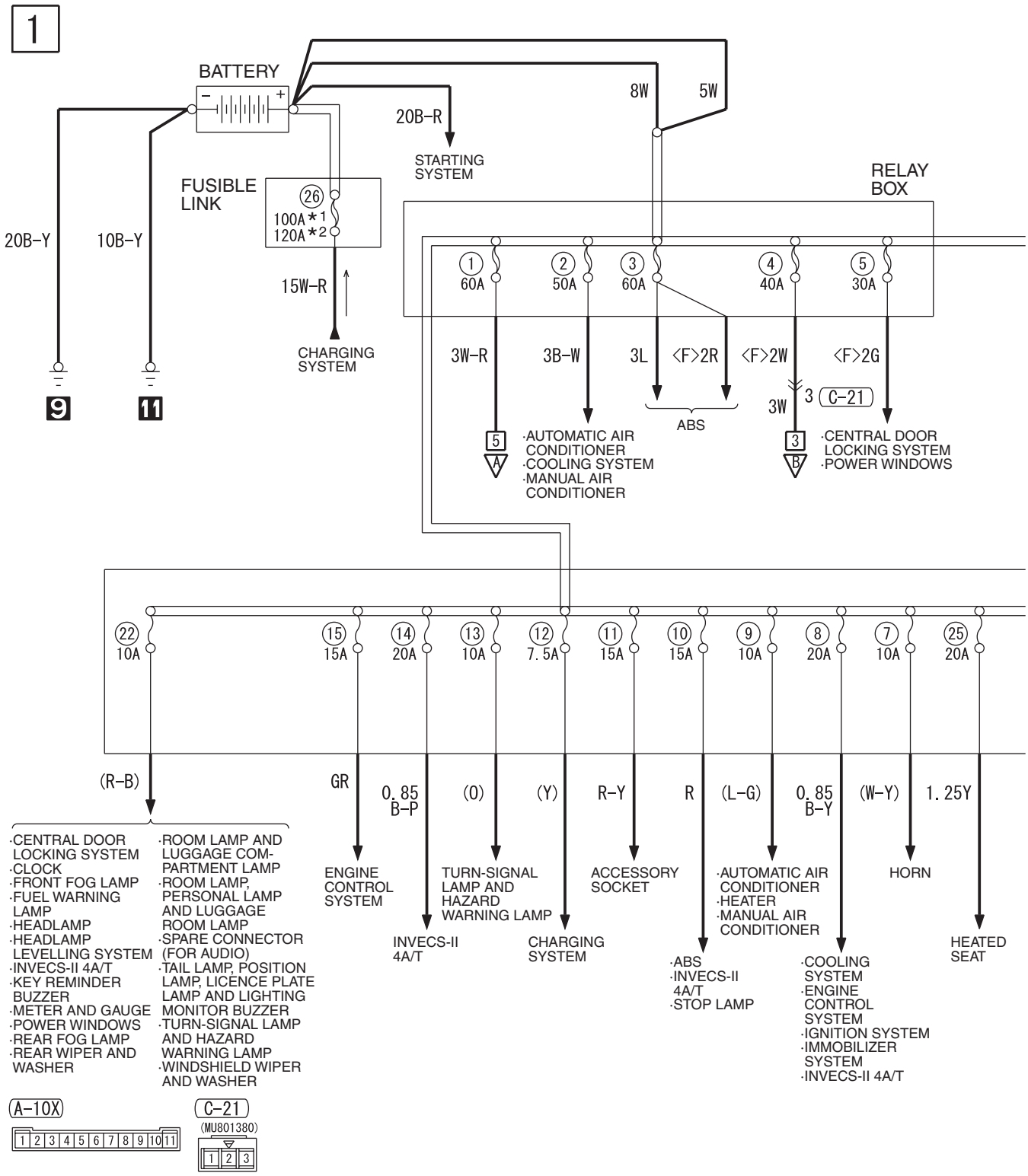

H6J01E03AA

2

NOTE
*1: 4G1
*2: 4G6

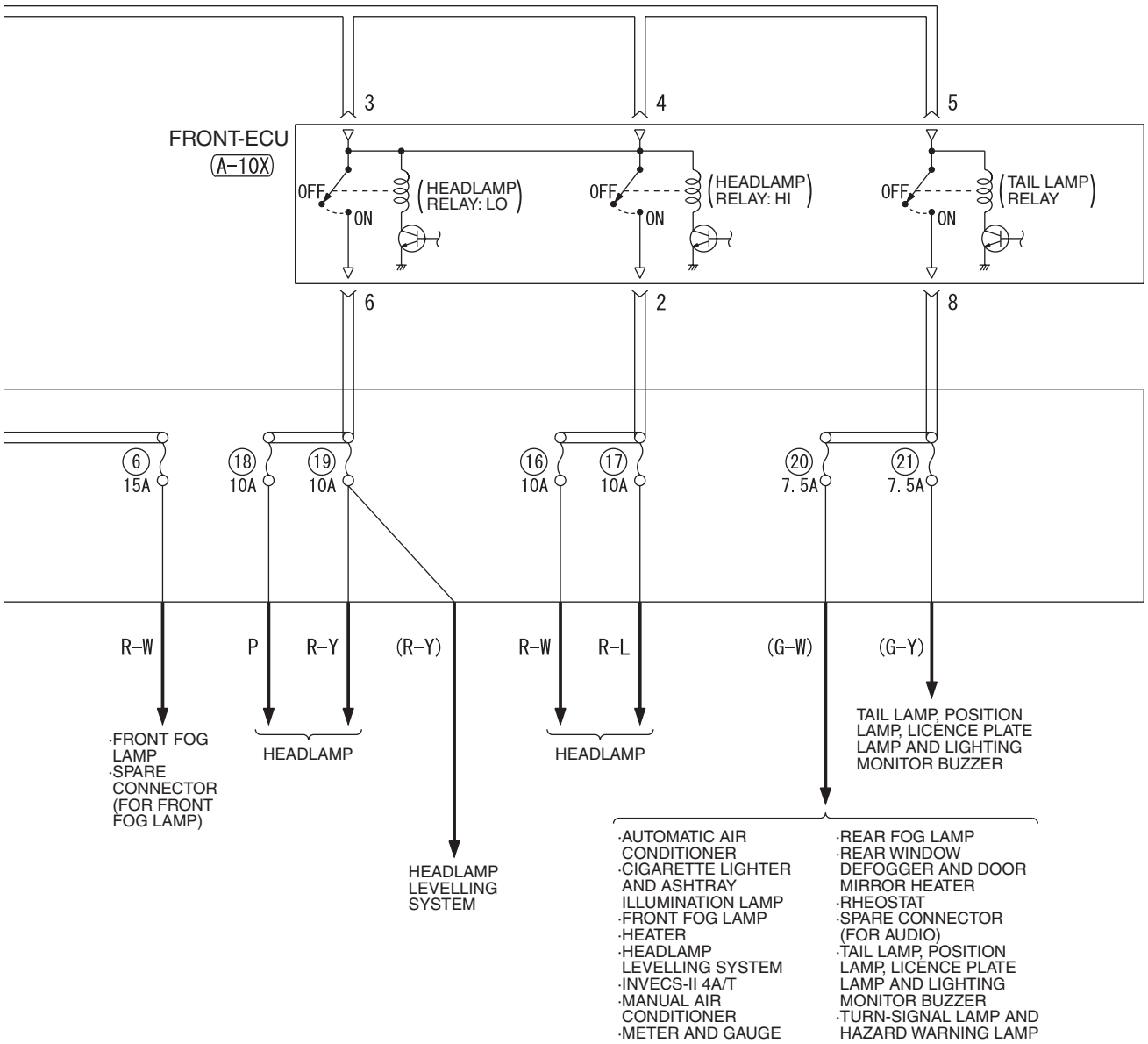

Wire colour code
B : Black LG : Light green G : Green L : Blue W : White Y : Yellow SB : Sky blue
BR : Brown O : Orange GR : Grey R : Red P : Pink V : Violet PU : Purple

H6J01E03AB

POWER DISTRIBUTION SYSTEM <LHD> (CONTINUED)

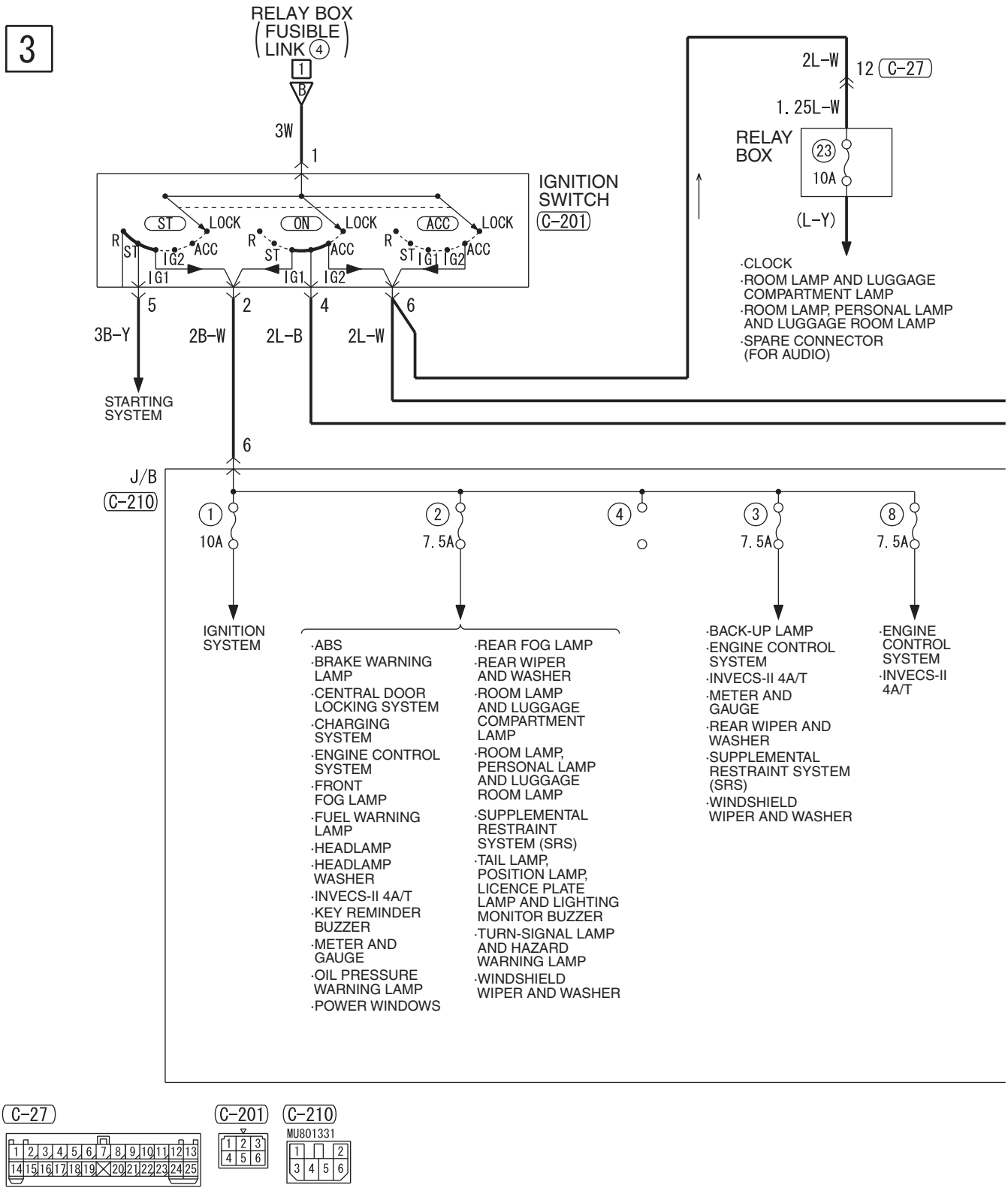

H6J01E03BA

4

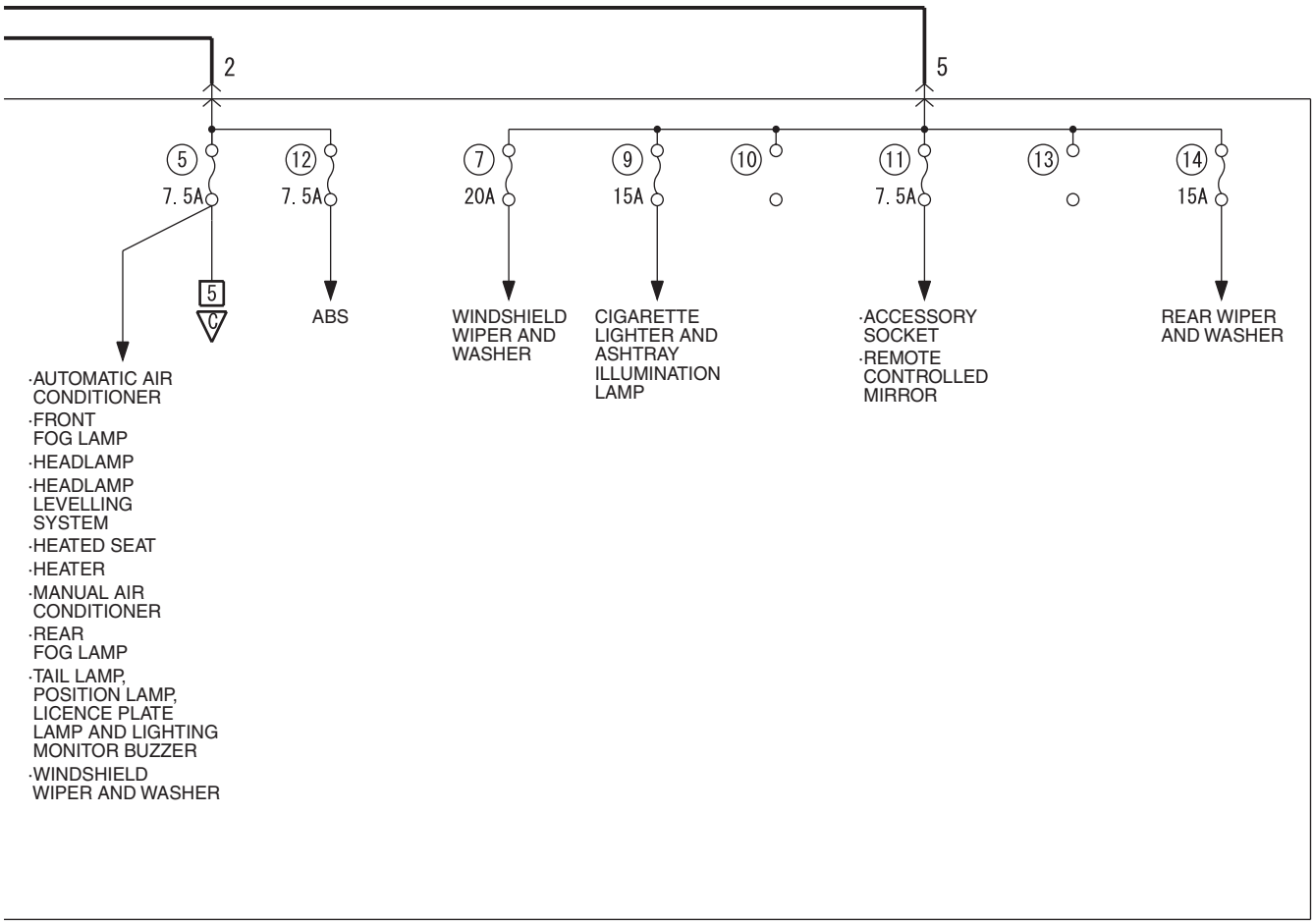

Wire colour code
B : Black LG : Light green G : Green L : Blue W : White Y : Yellow SB : Sky blue
BR : Brown O : Orange GR : Grey R : Red P : Pink V : Violet PU : Purple

H6J01E03BB

POWER DISTRIBUTION SYSTEM <LHD> (CONTINUED)

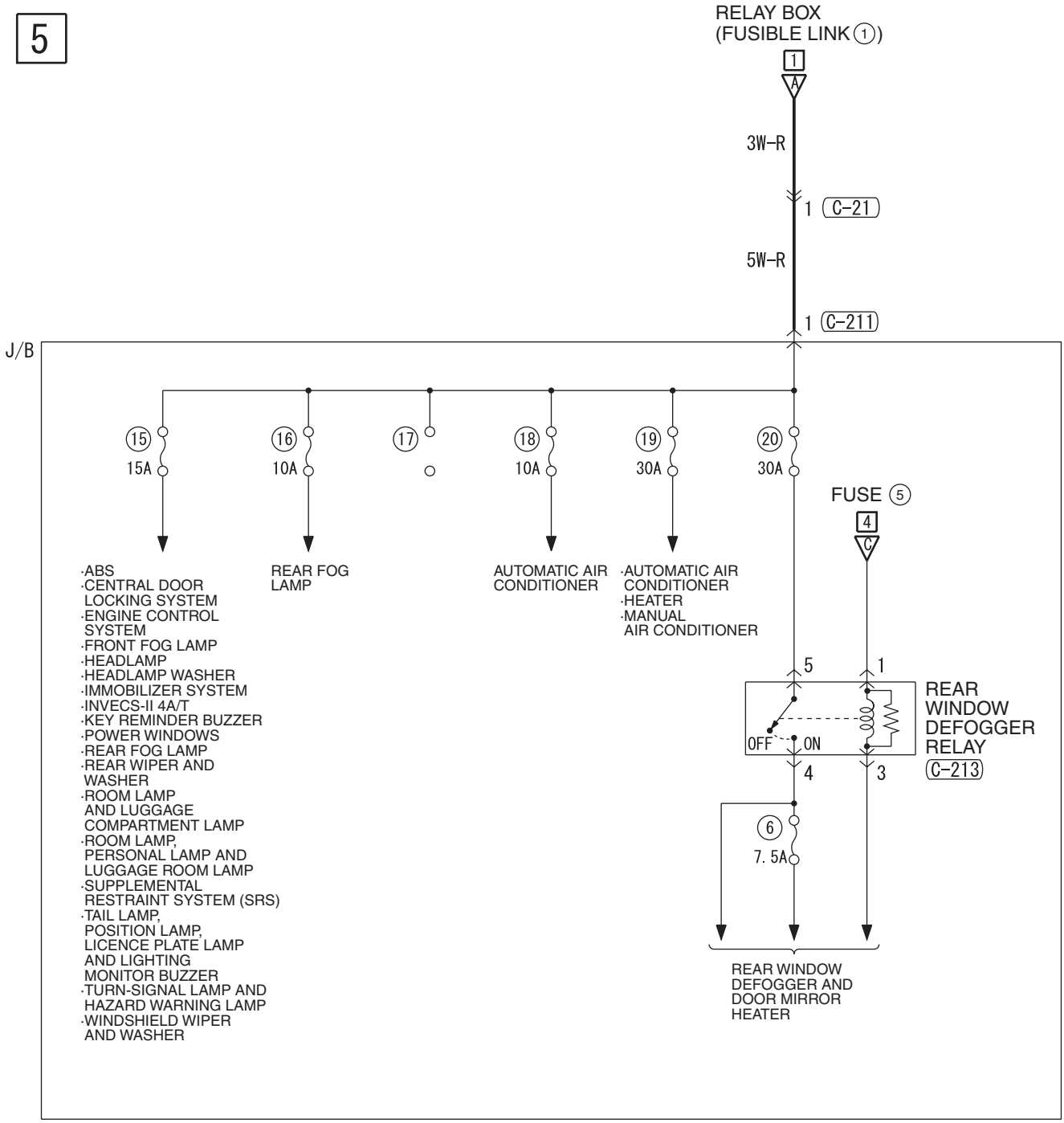

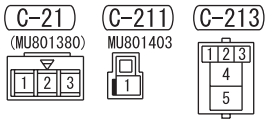

Wire colour code
B : Black LG : Light green G : Green L : Blue W : White Y : Yellow SB : Sky blue
BR : Brown O : Orange GR : Grey R : Red P : Pink V : Violet PU : Purple

H6J01E03CA

NOTES

POWER DISTRIBUTION SYSTEM <RHD>

M1901000402013

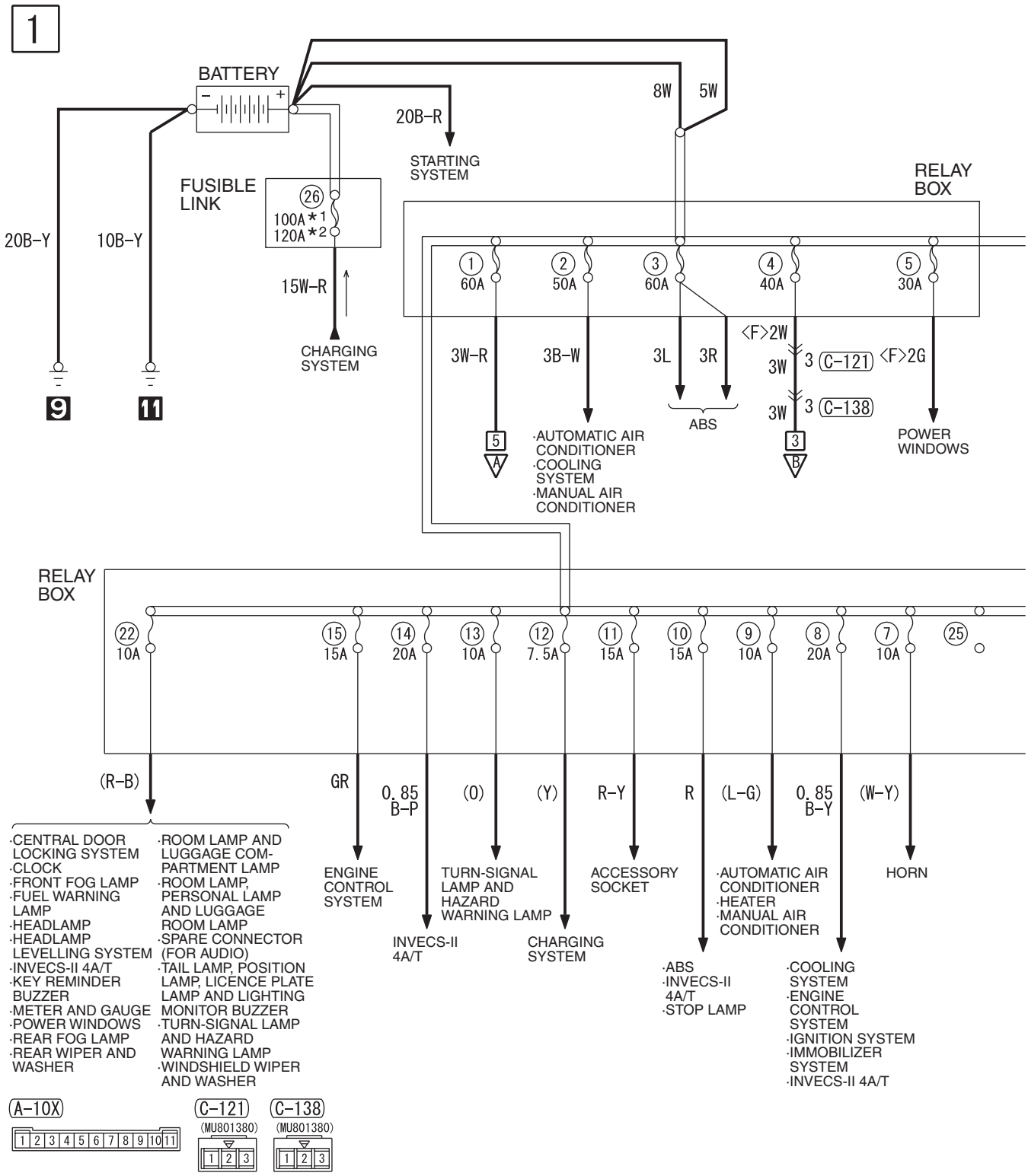

H6J01E04AA

2

NOTE
*1: 4G1
*2: 4G6

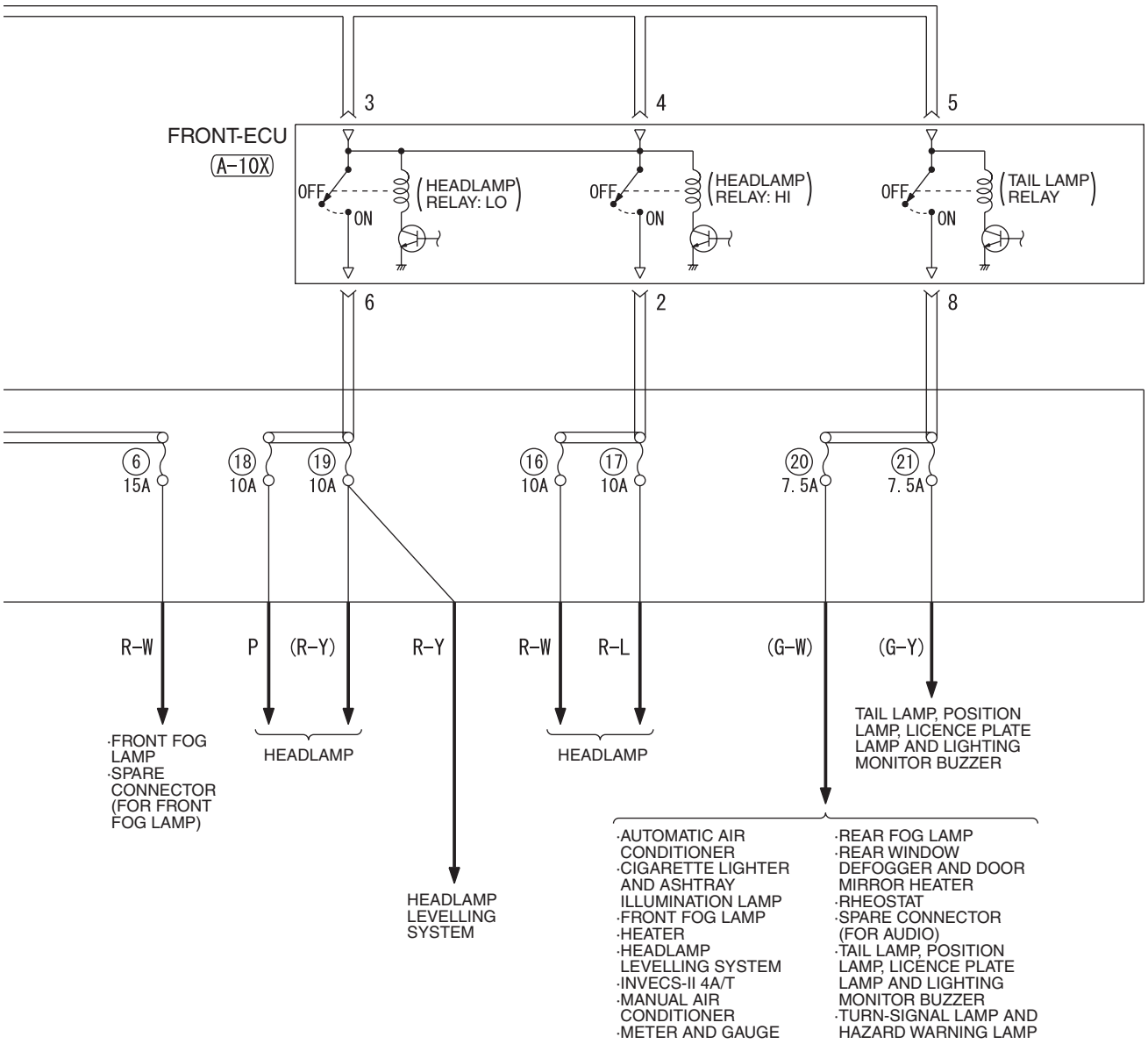

Wire colour code
B : Black LG : Light green G : Green L : Blue W : White Y : Yellow SB : Sky blue
BR : Brown O : Orange GR : Grey R : Red P : Pink V : Violet PU : Purple

H6J01E04AB

POWER DISTRIBUTION SYSTEM <RHD> (CONTINUED)

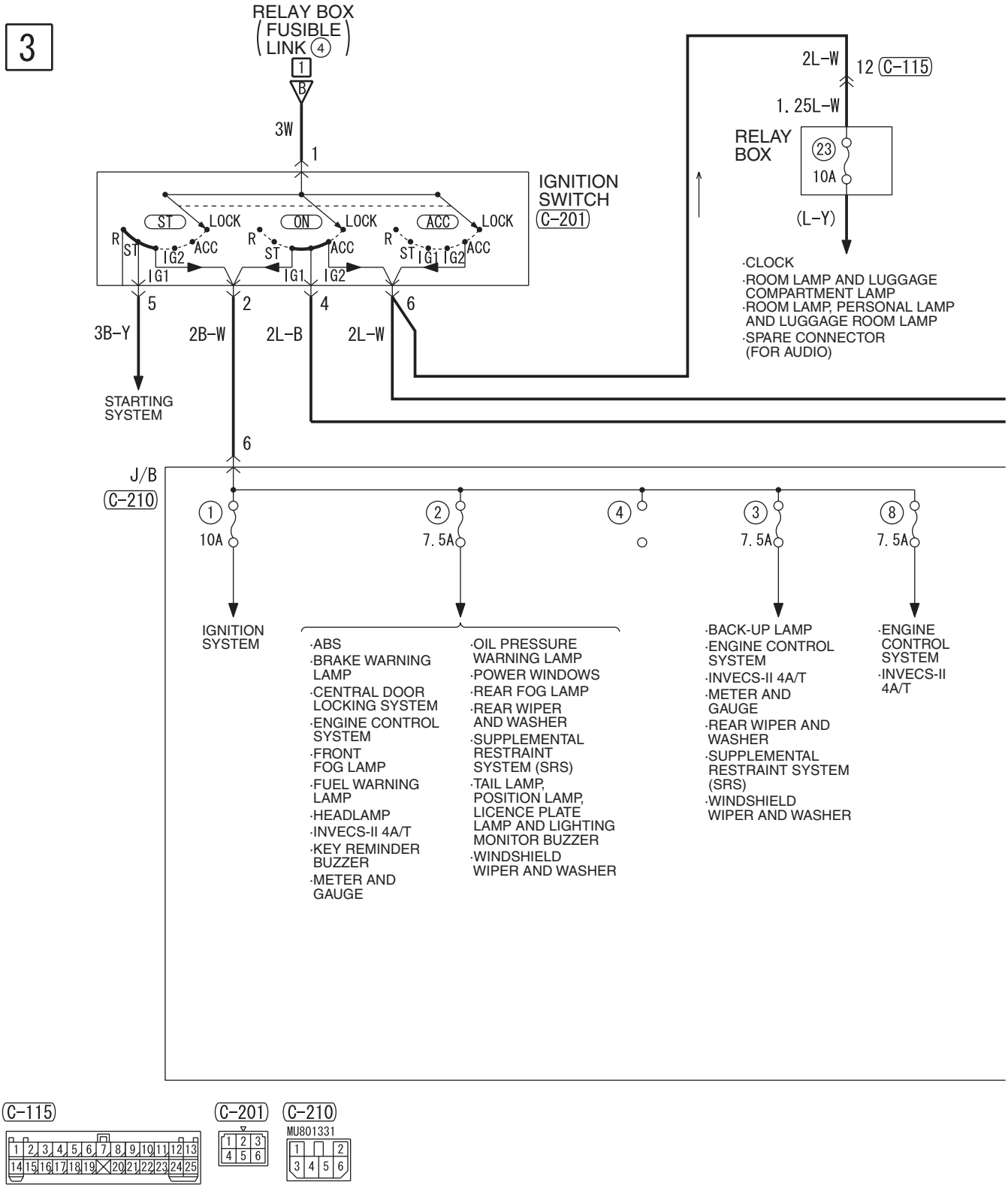

H6J01E04BA

4

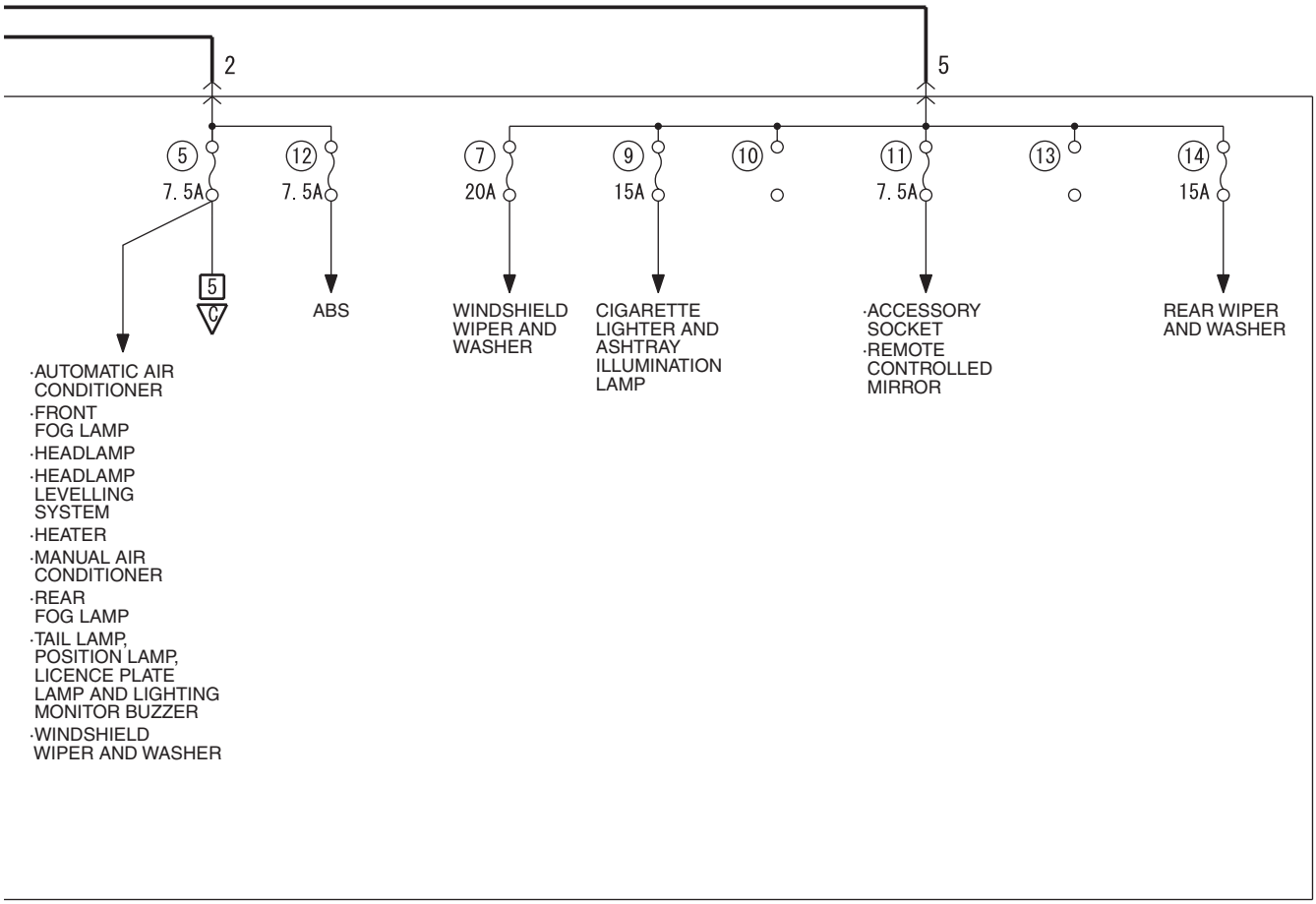

Wire colour code
B : Black LG : Light green G : Green L : Blue W : White Y : Yellow SB : Sky blue
BR : Brown O : Orange GR : Grey R : Red P : Pink V : Violet PU : Purple

H6J01E04BB

POWER DISTRIBUTION SYSTEM <RHD> (CONTINUED)

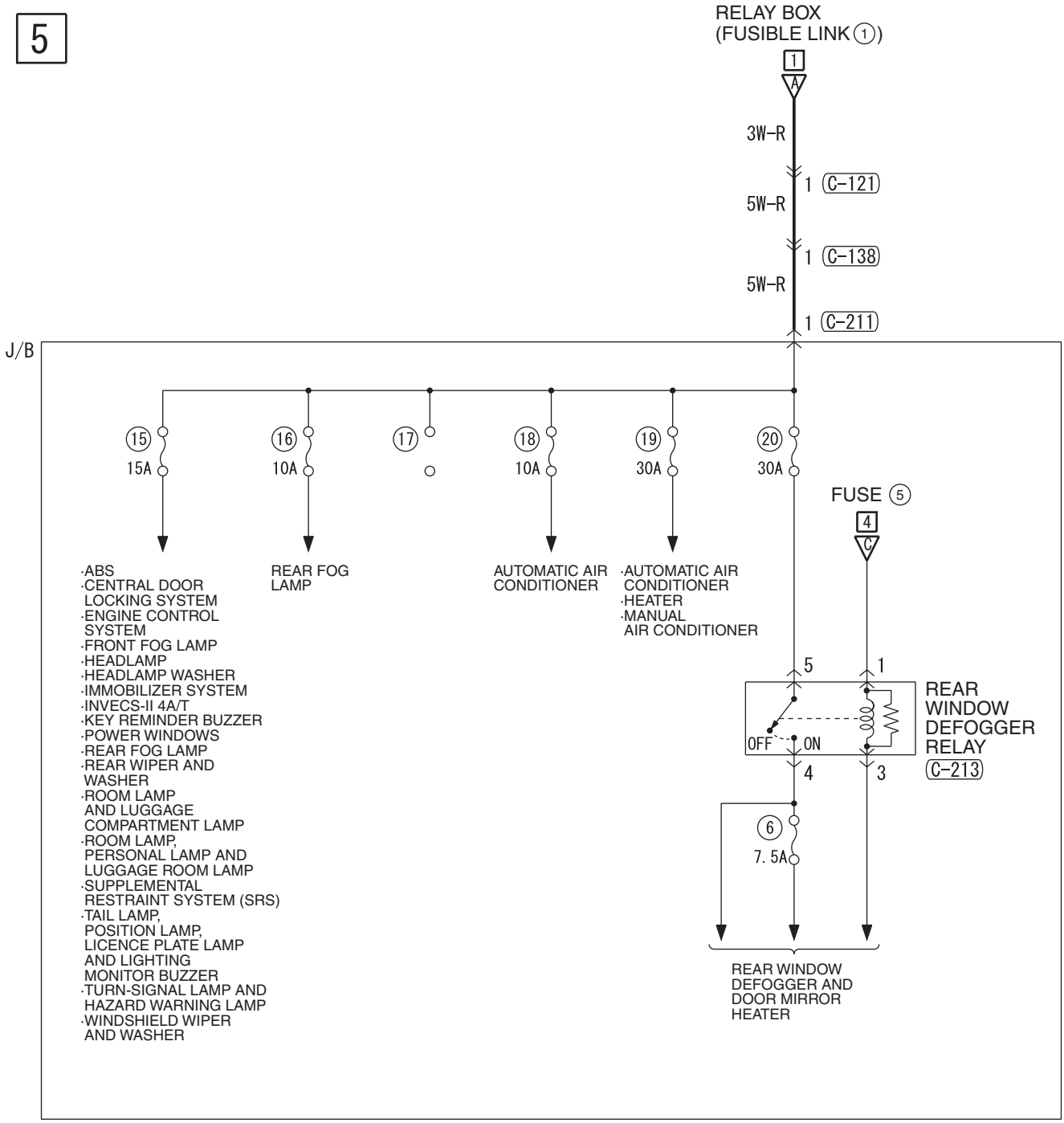

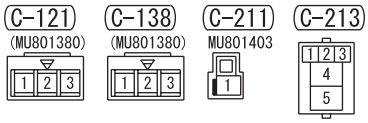

Wire colour code
B : Black LG : Light green G : Green L : Blue W : White Y : Yellow SB : Sky blue
BR : Brown O : Orange GR : Grey R : Red P : Pink V : Violet PU : Purple

H6J01E04CA

NOTES

STARTING SYSTEM

STARTING SYSTEM <M/T>

M1901000502269

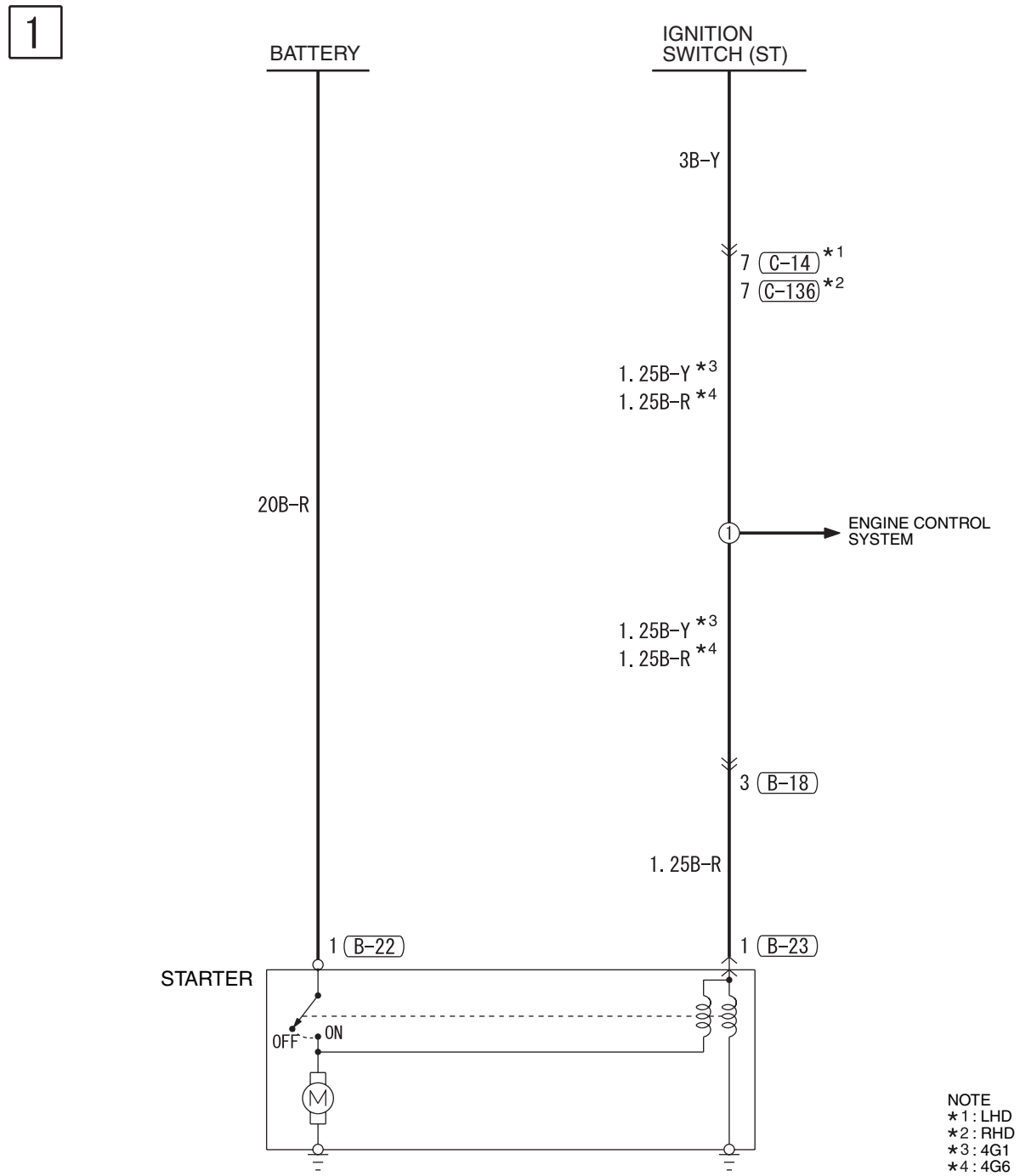

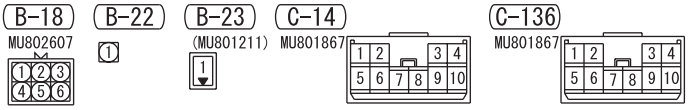

Wire colour code
B : Black LG : Light green G : Green L : Blue W : White Y : Yellow SB : Sky blue
BR : Brown O : Orange GR : Grey R : Red P : Pink V : Violet PU : Purple

H6J02E02AA

STARTING SYSTEM <A/T>

M1901000502270

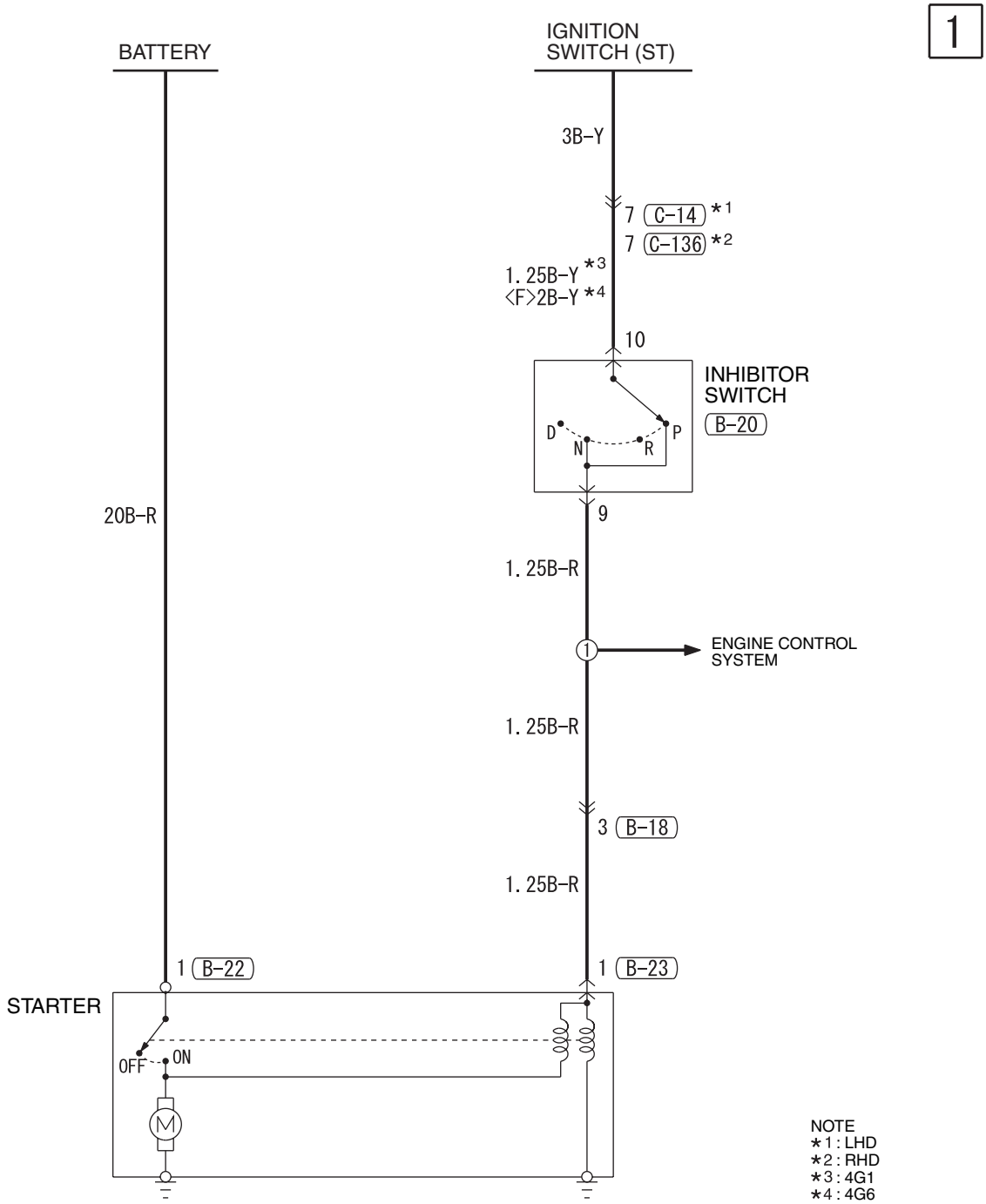

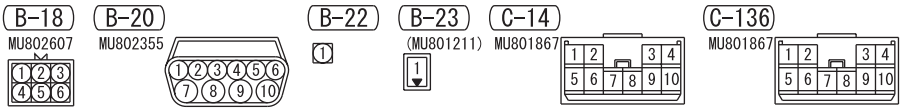

Wire colour code
B : Black LG : Light green G : Green L : Blue W : White Y : Yellow SB : Sky blue
BR : Brown O : Orange GR : Grey R : Red P : Pink V : Violet PU : Purple

H6J02E03AA

IGNITION SYSTEM

IGNITION SYSTEM <4G1-M/T (LHD)>

M1901000603065

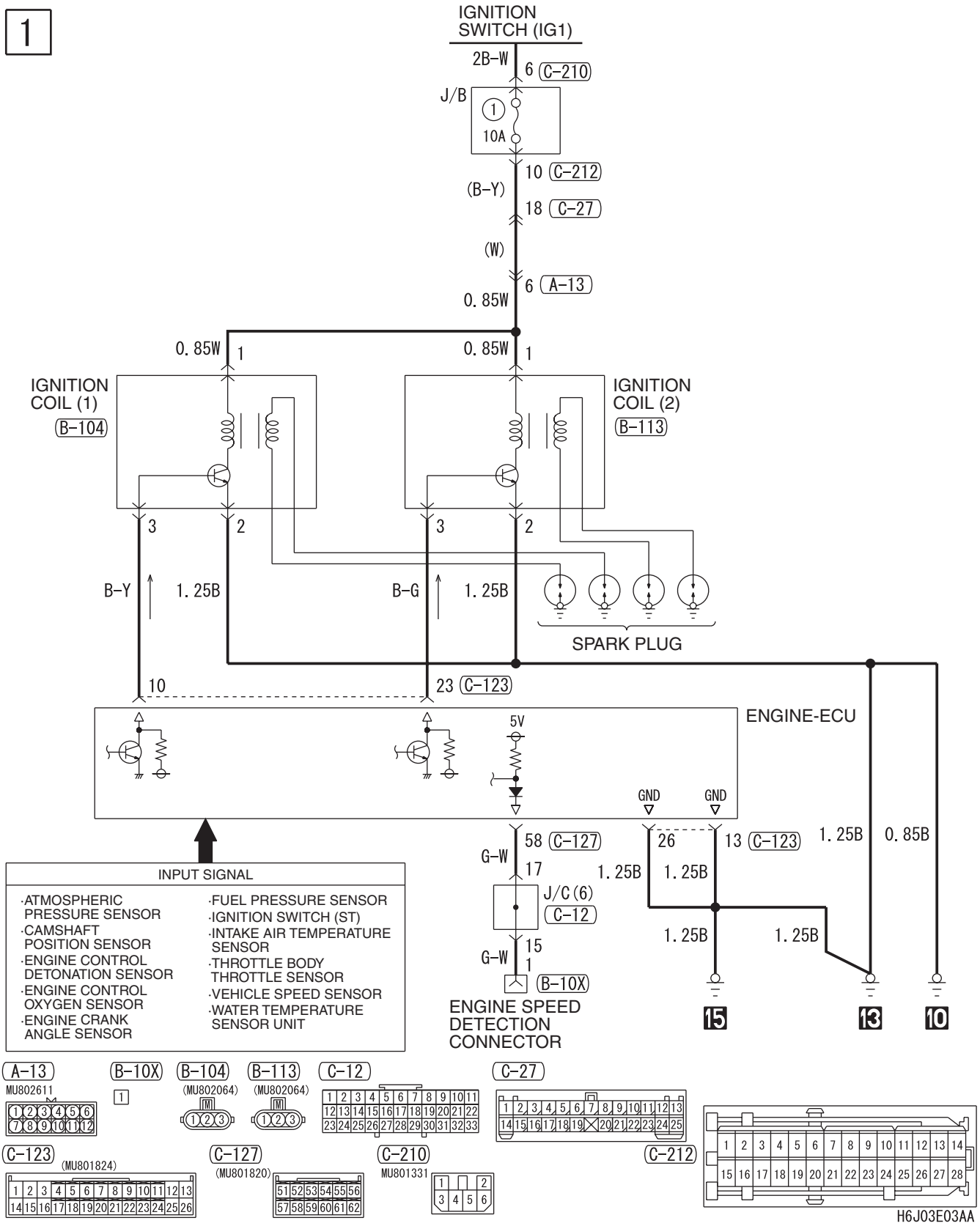

IGNITION SYSTEM <4G1-M/T (RHD)>

M1901000603076

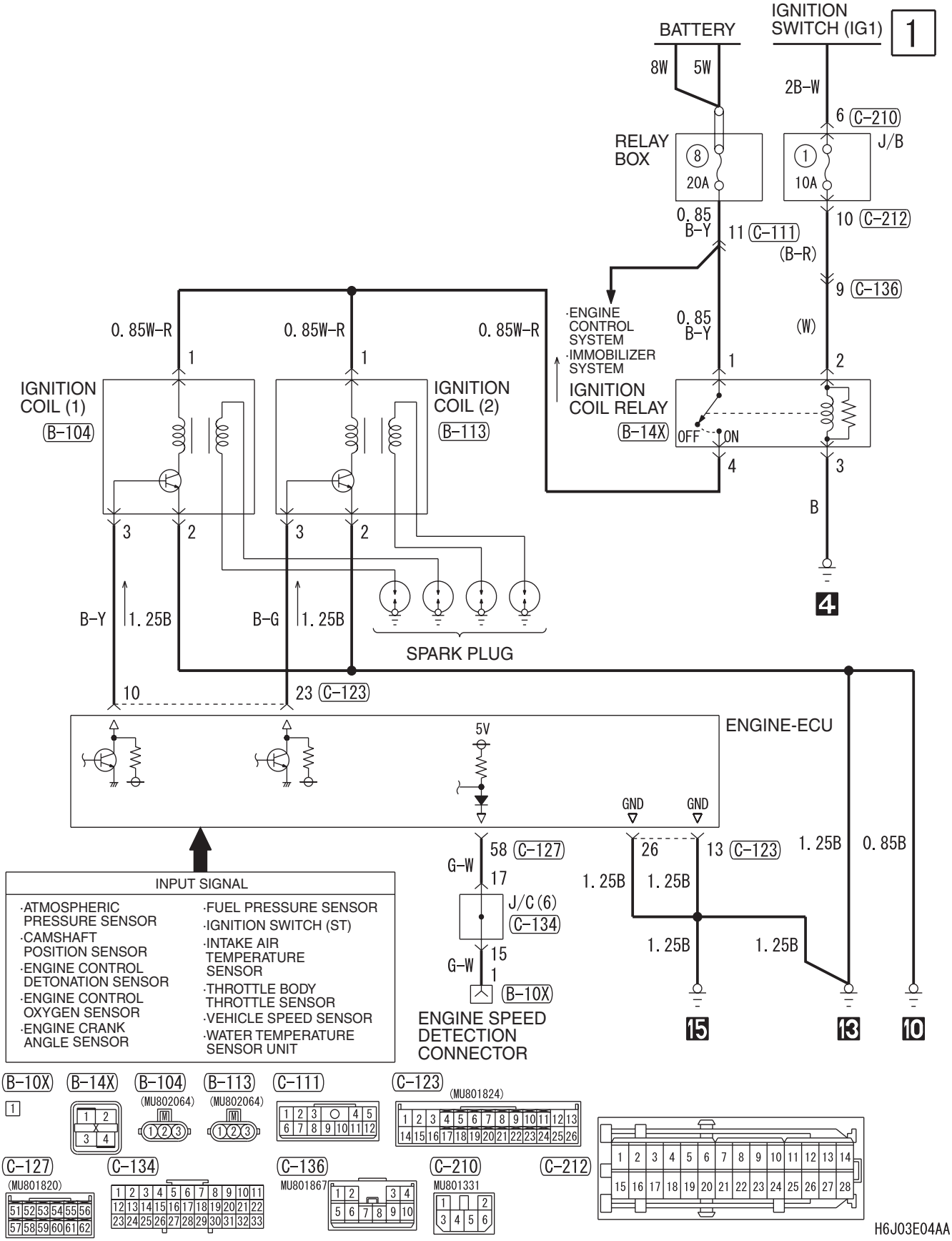

IGNITION SYSTEM <4G1-A/T (LHD)>

M1901000603087

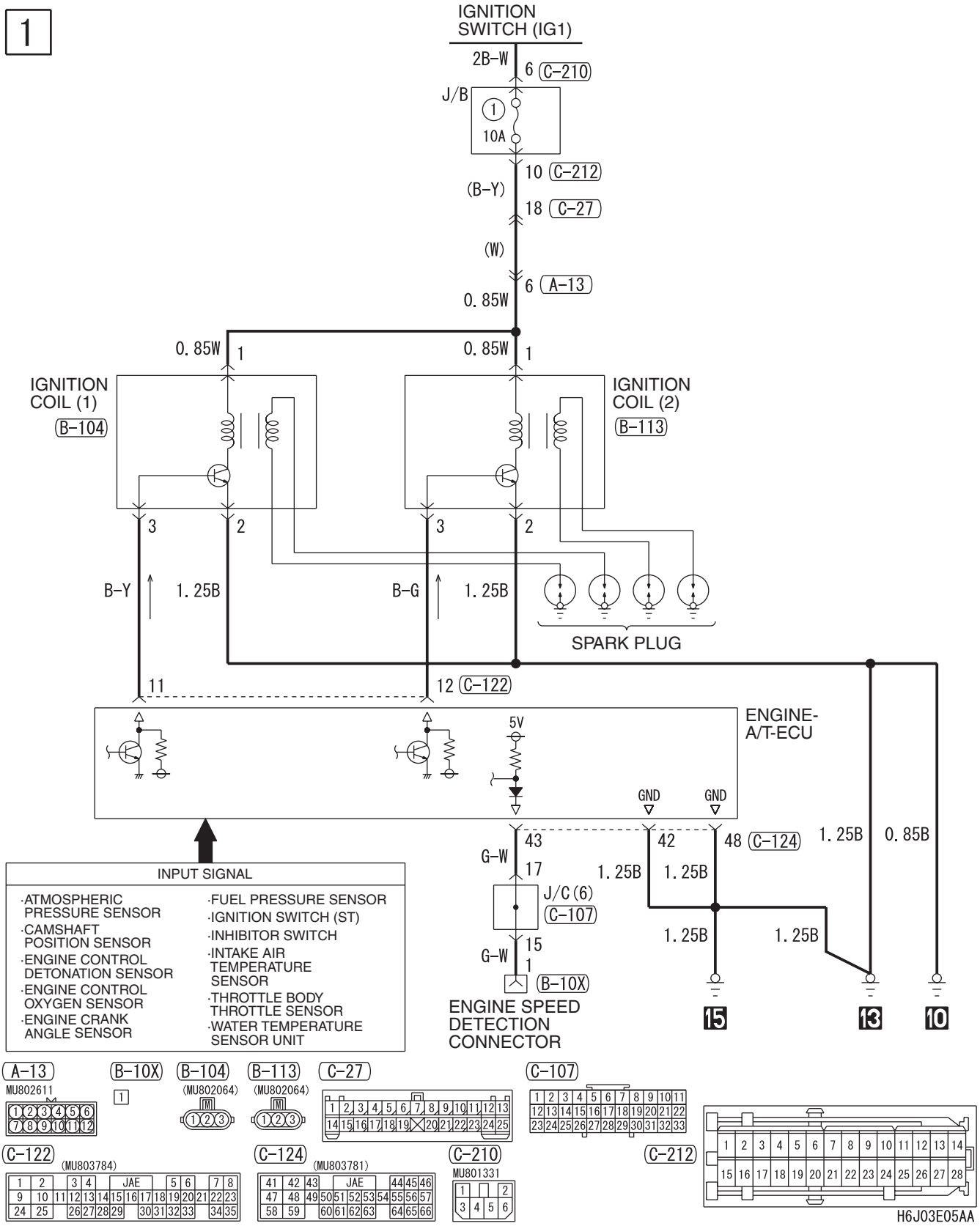

IGNITION SYSTEM <4G1-A/T (RHD)>

M1901000603098

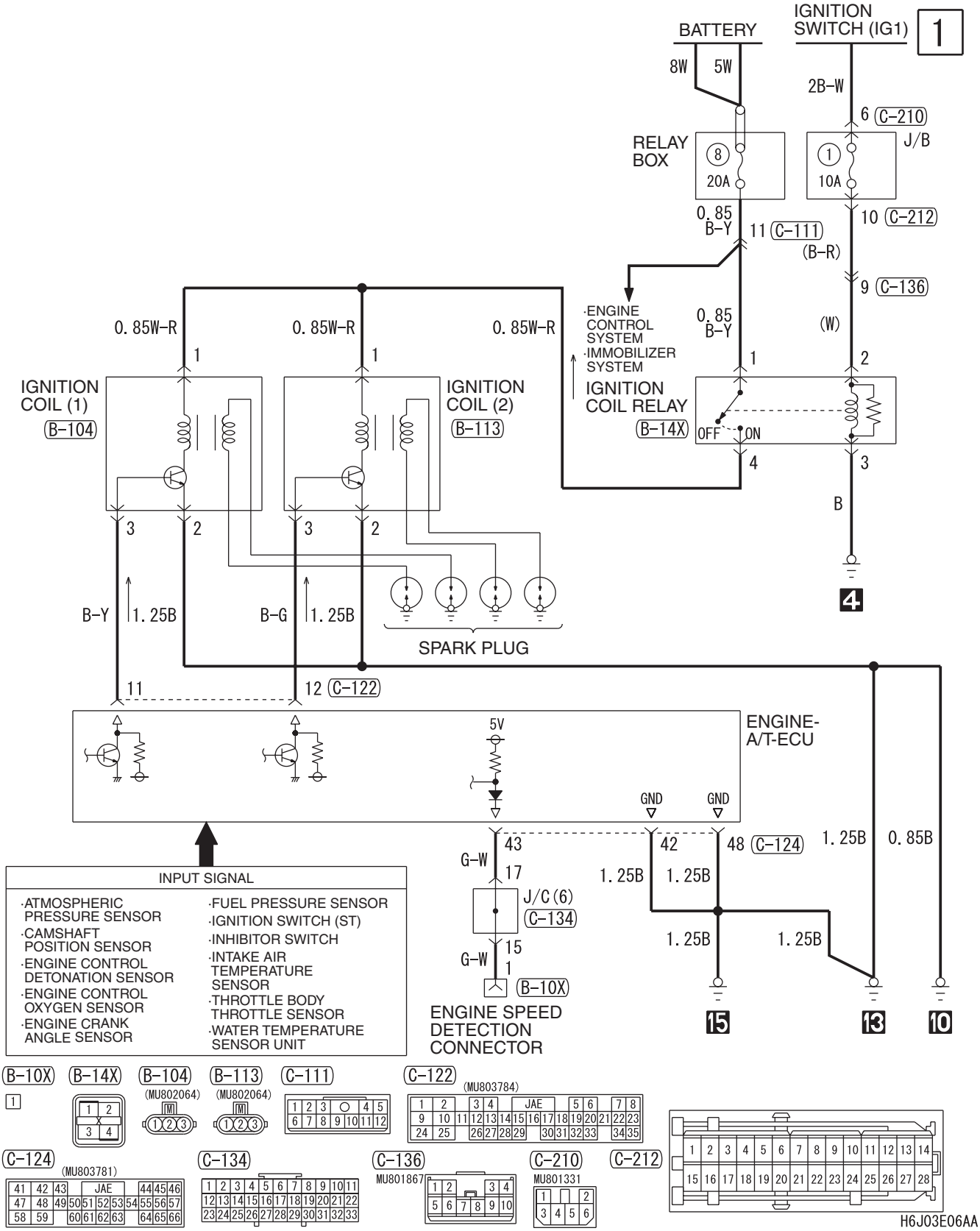

IGNITION SYSTEM <4G6-M/T (LHD)>

M1901000603106

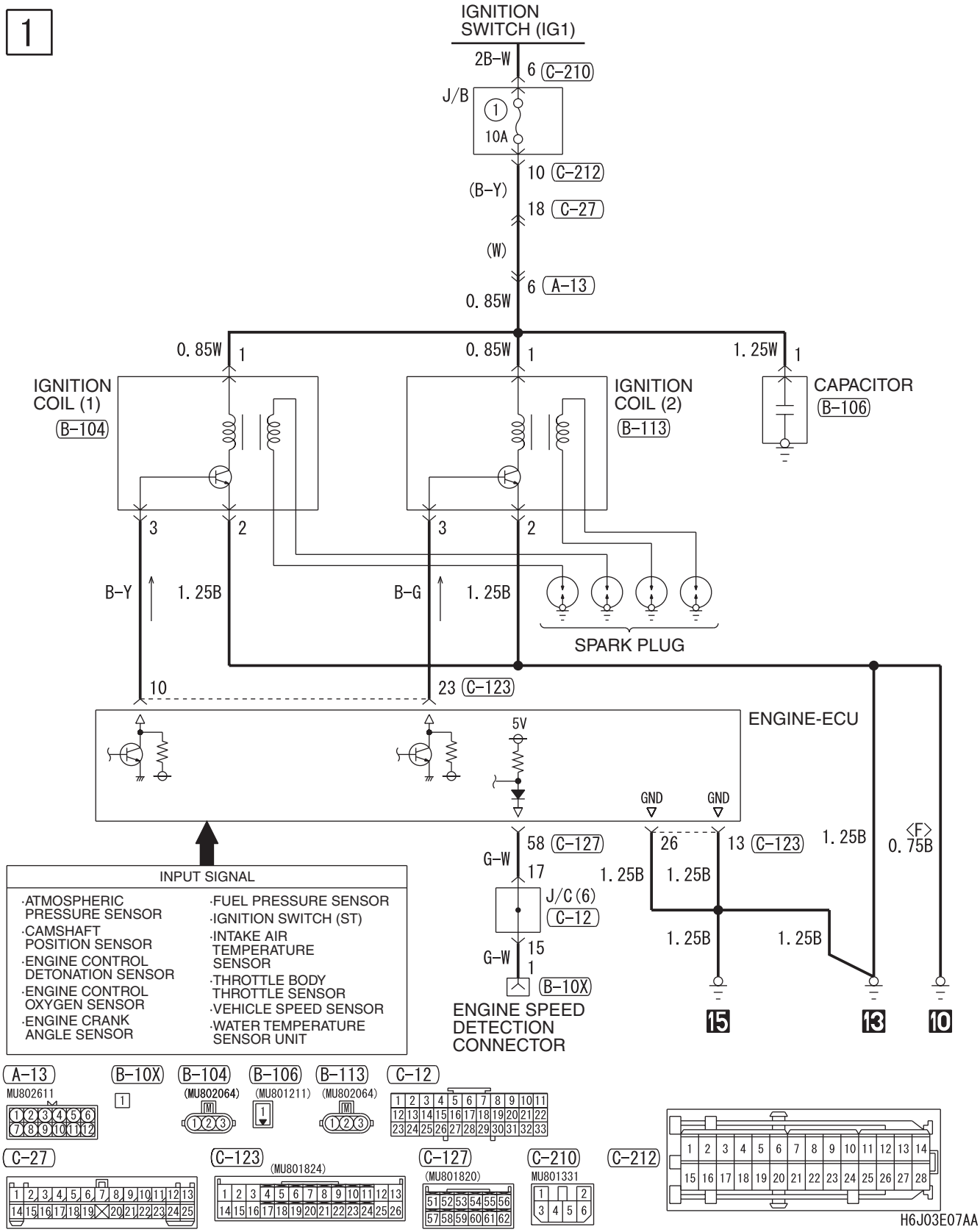

IGNITION SYSTEM <4G6-M/T (RHD)>

M1901000603117

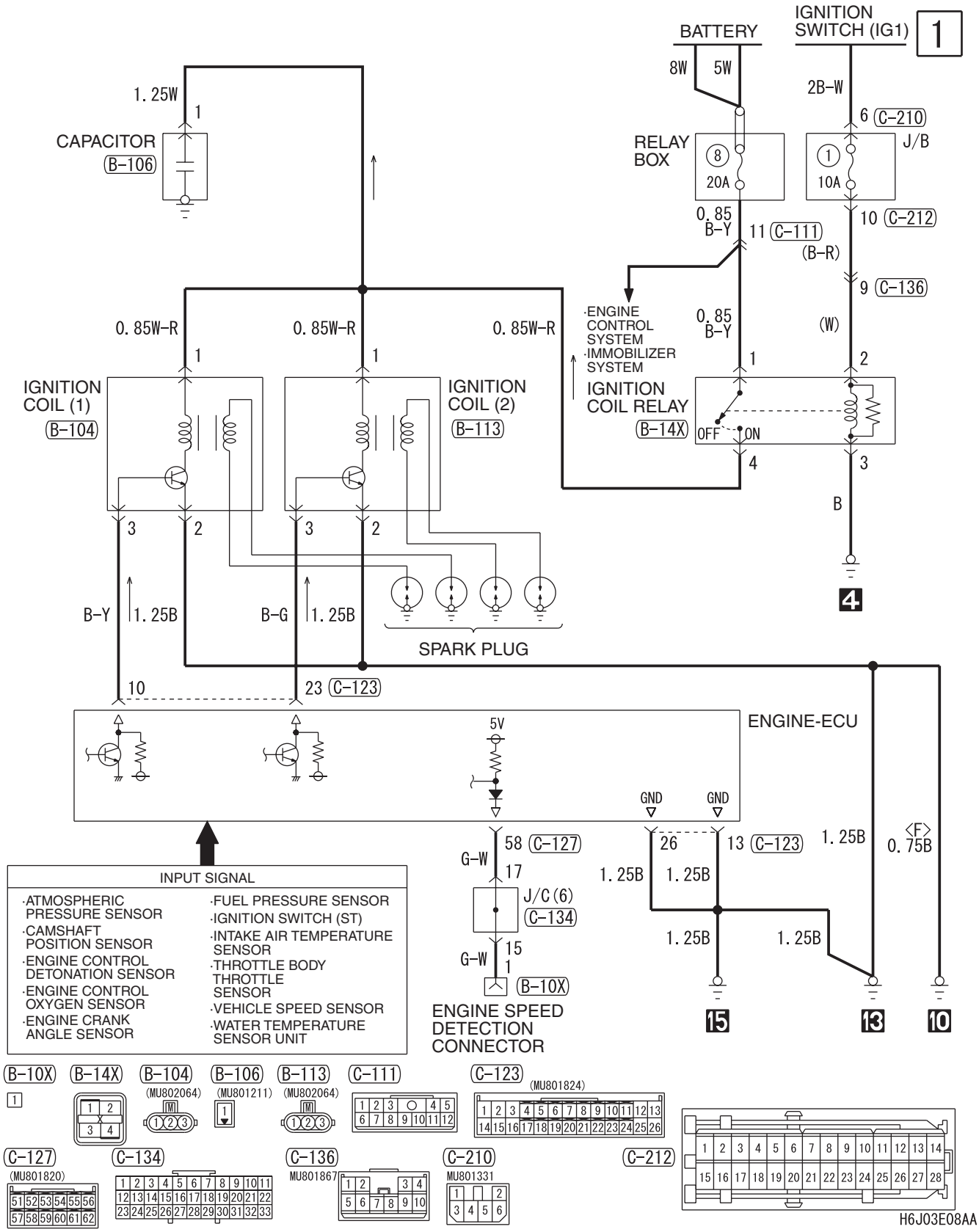

IGNITION SYSTEM <4G6-A/T (LHD)>

M1901000603128

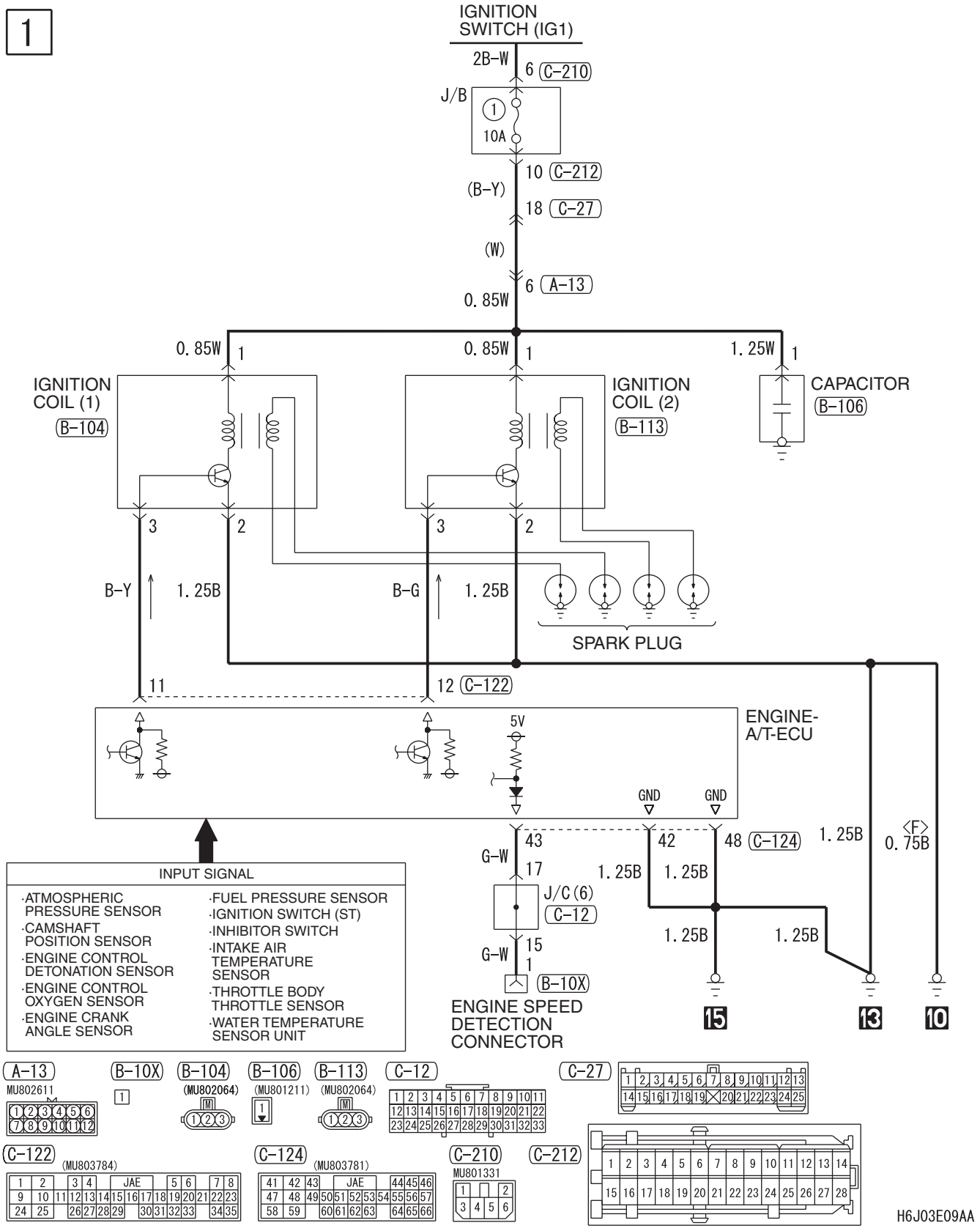

NOTES

CHARGING SYSTEM

CHARGING SYSTEM <M/T>

M1901000702230

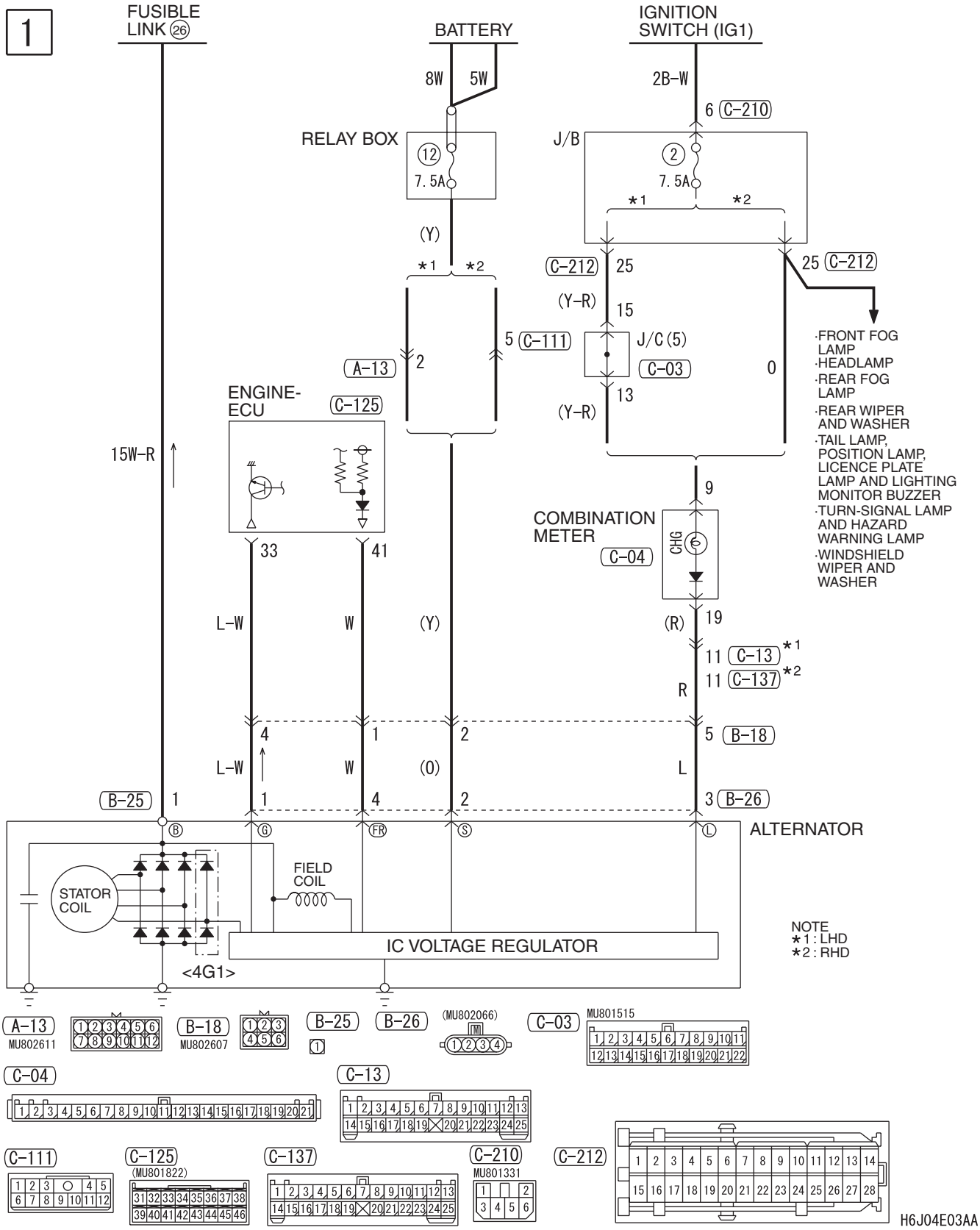

CHARGING SYSTEM <A/T>

M1901000702241

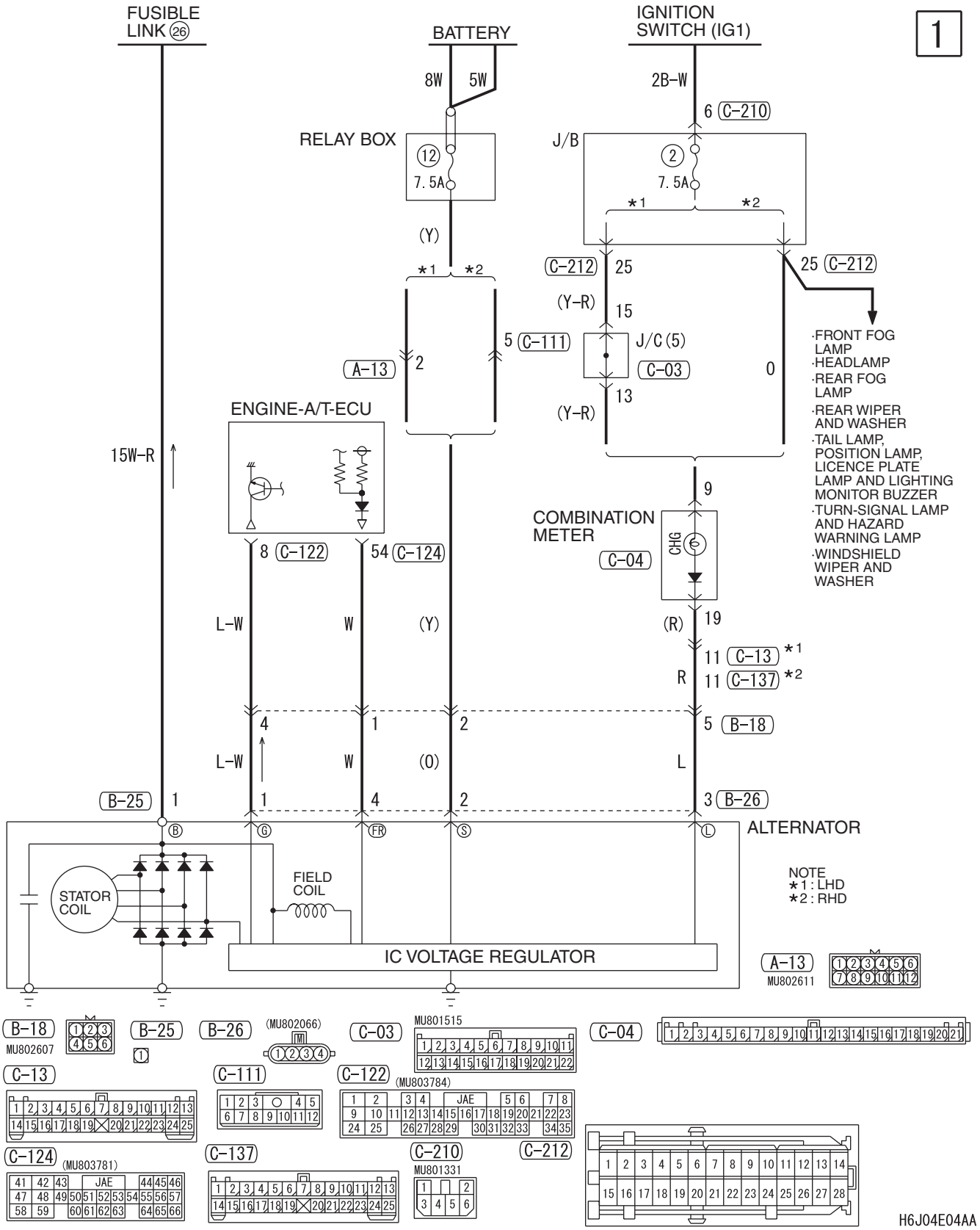

ENGINE CONTROL SYSTEM

ENGINE CONTROL SYSTEM <4G1-M/T (LHD)>

M1901000804277

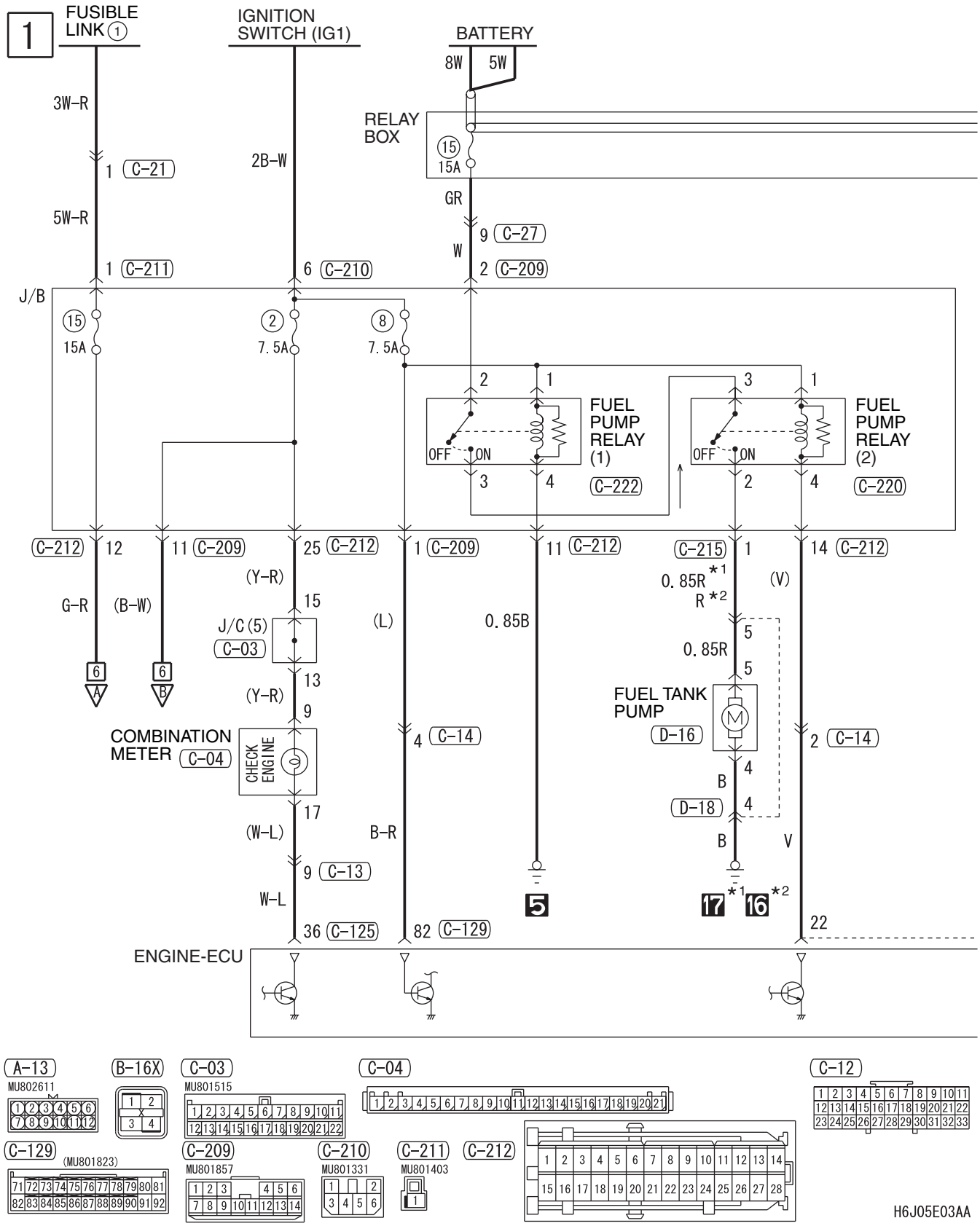

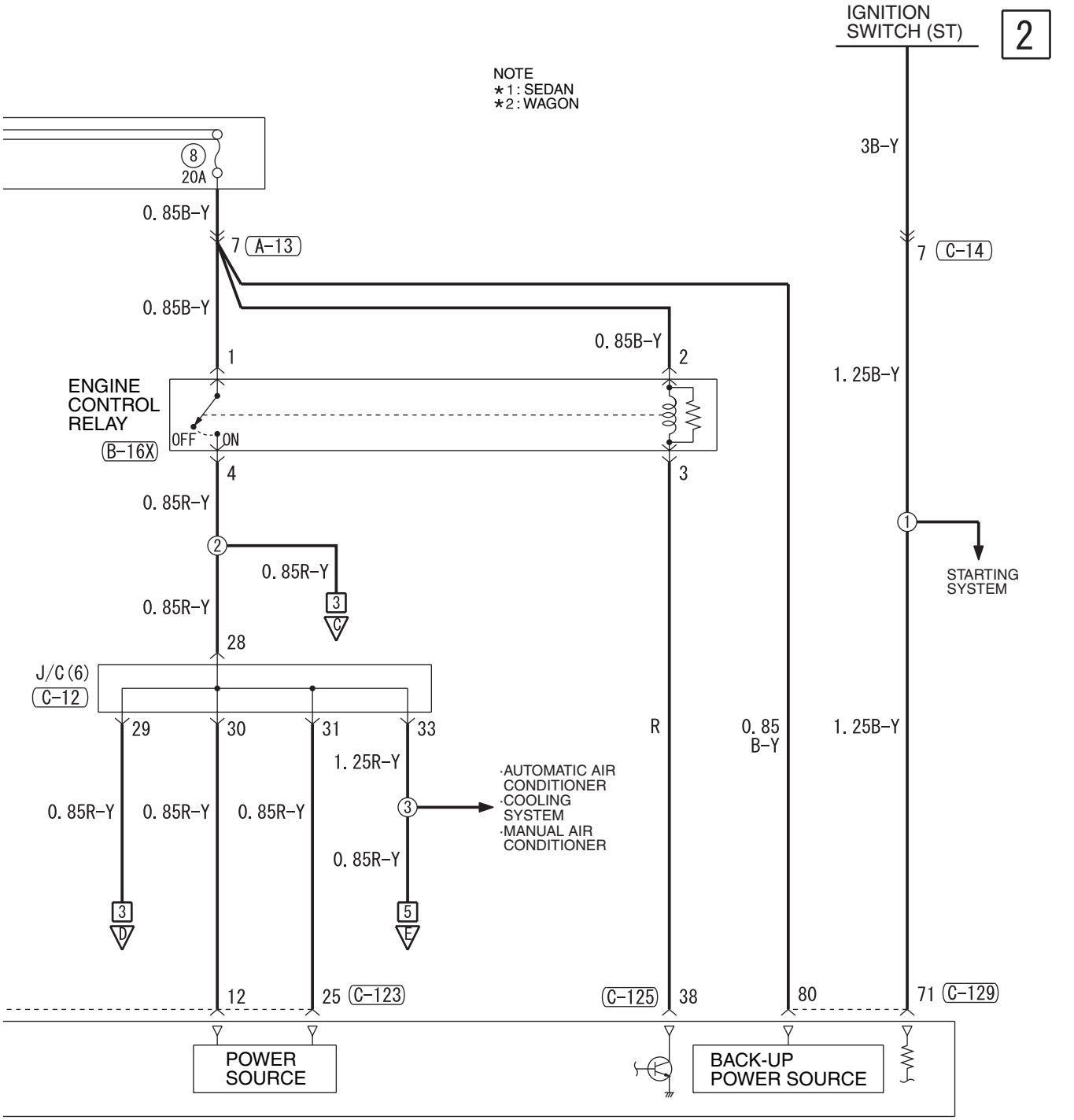

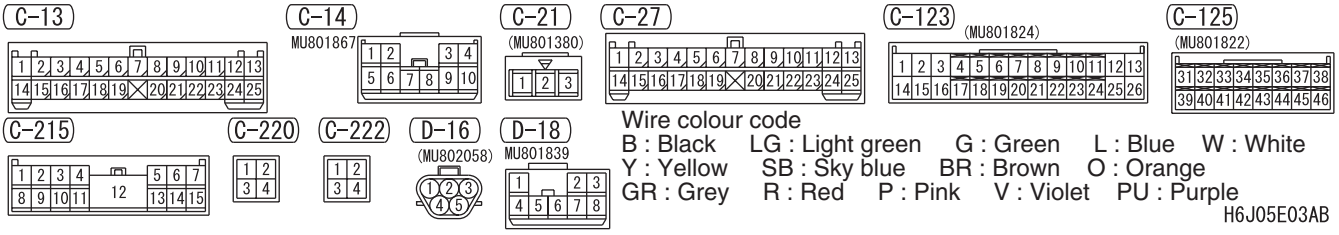

Wire colour code
B : Black LG : Light green G : Green L : Blue W : White
Y : Yellow SB : Sky blue BR : Brown O : Orange
GR : Grey R : Red P : Pink V : Violet PU : Purple

H6J05E03AB

ENGINE CONTROL SYSTEM <4G1-M/T (LHD)> (CONTINUED)

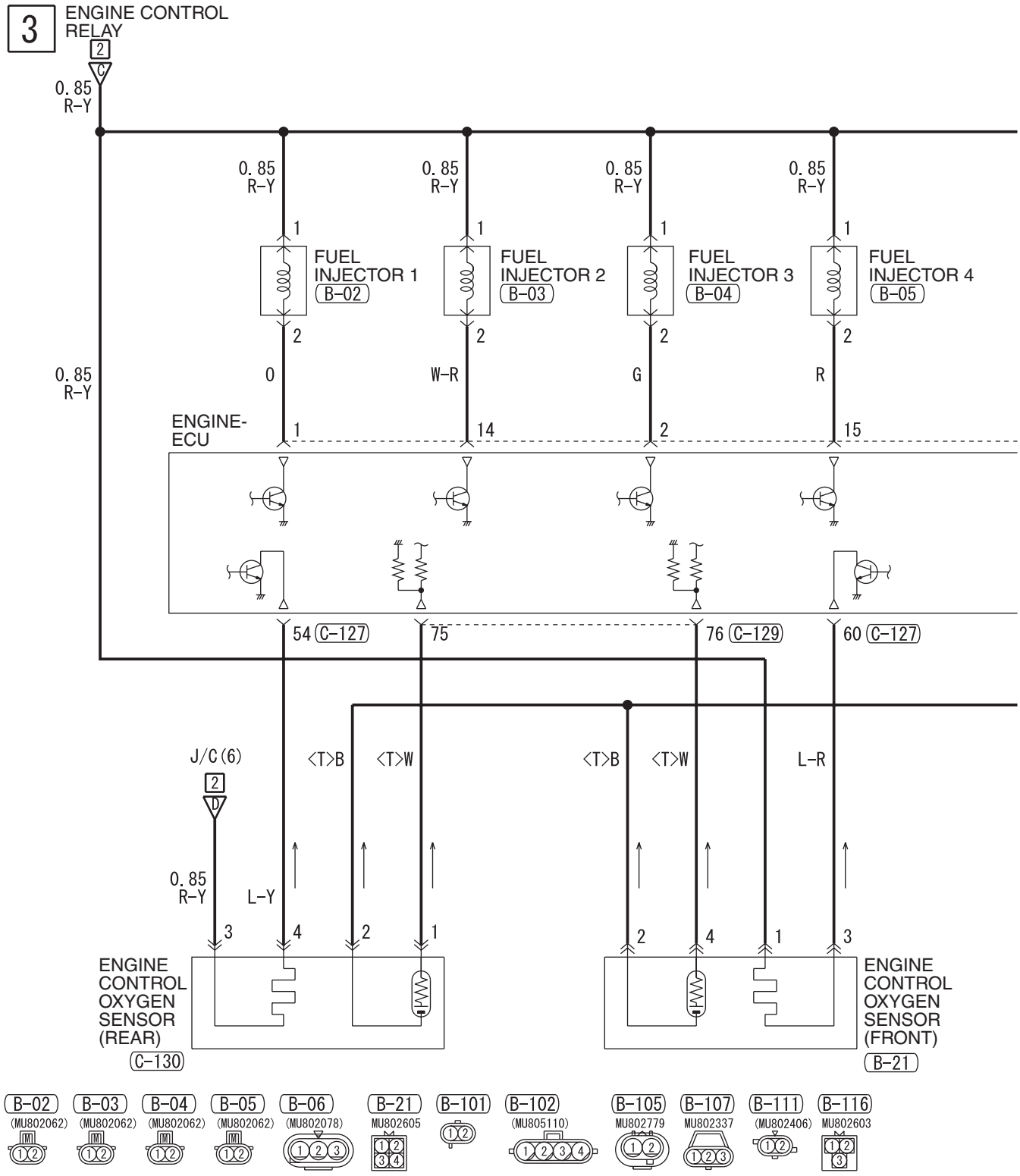

H6J05E03BA

4

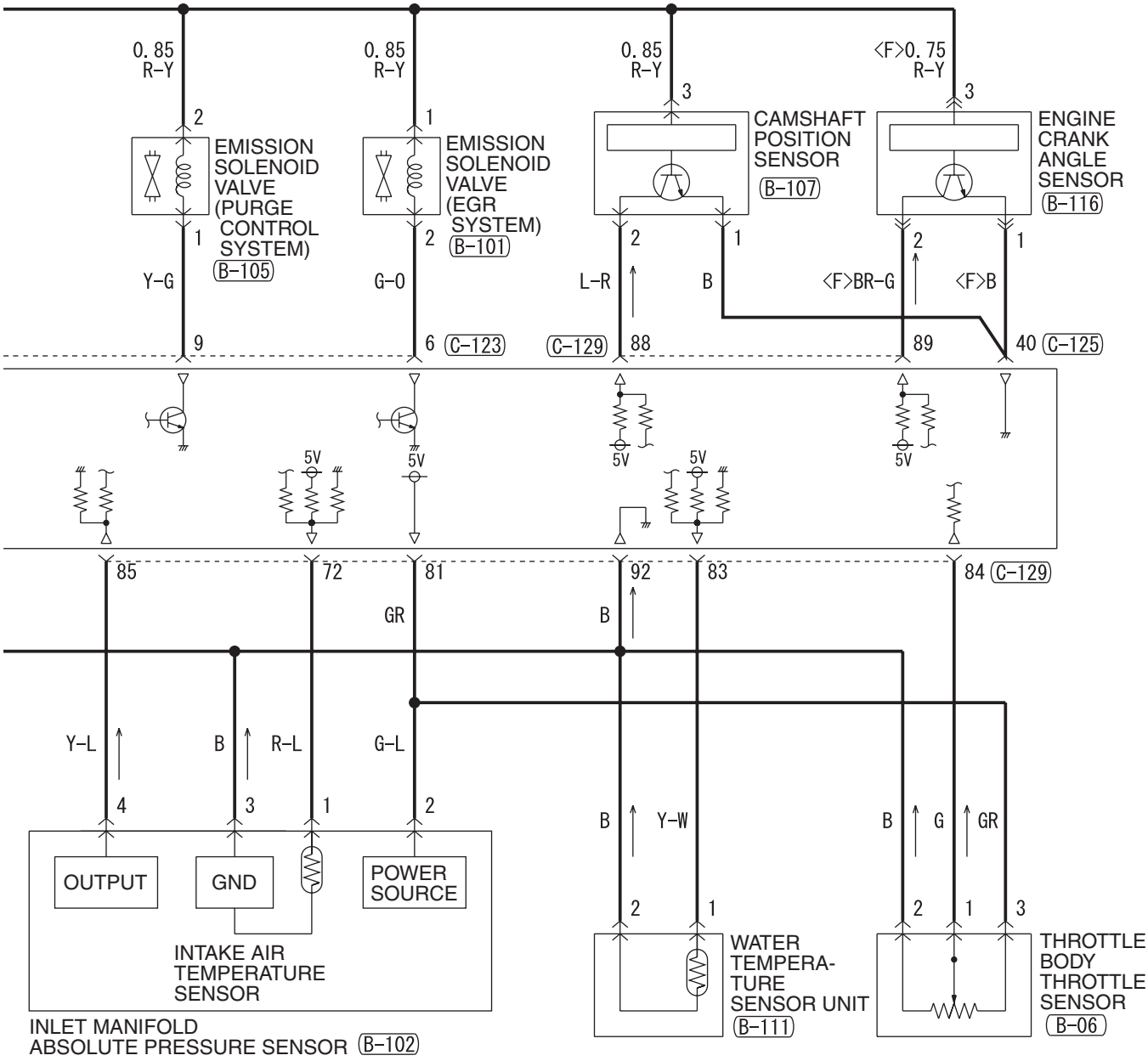

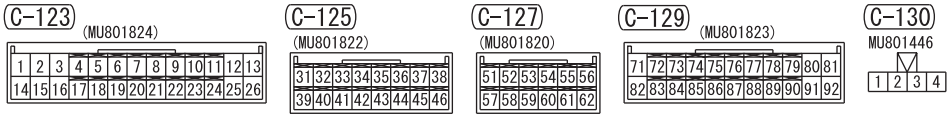

Wire colour code
B : Black LG : Light green G : Green L : Blue W : White Y : Yellow SB : Sky blue
BR : Brown O : Orange GR : Grey R : Red P : Pink V : Violet PU : Purple

H6J05E03BB

ENGINE CONTROL SYSTEM <4G1-M/T (LHD)> (CONTINUED)

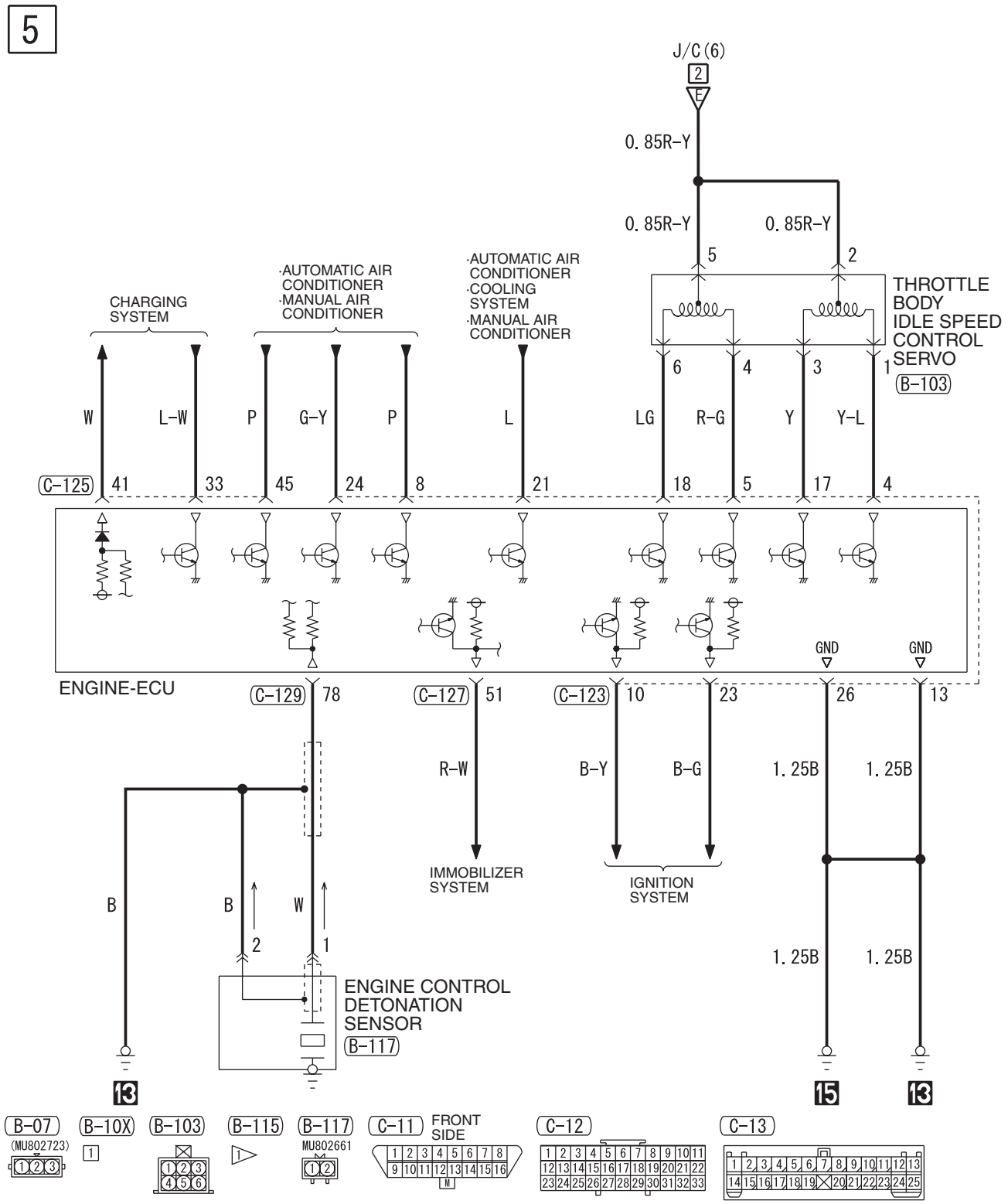

H6J05E03CA

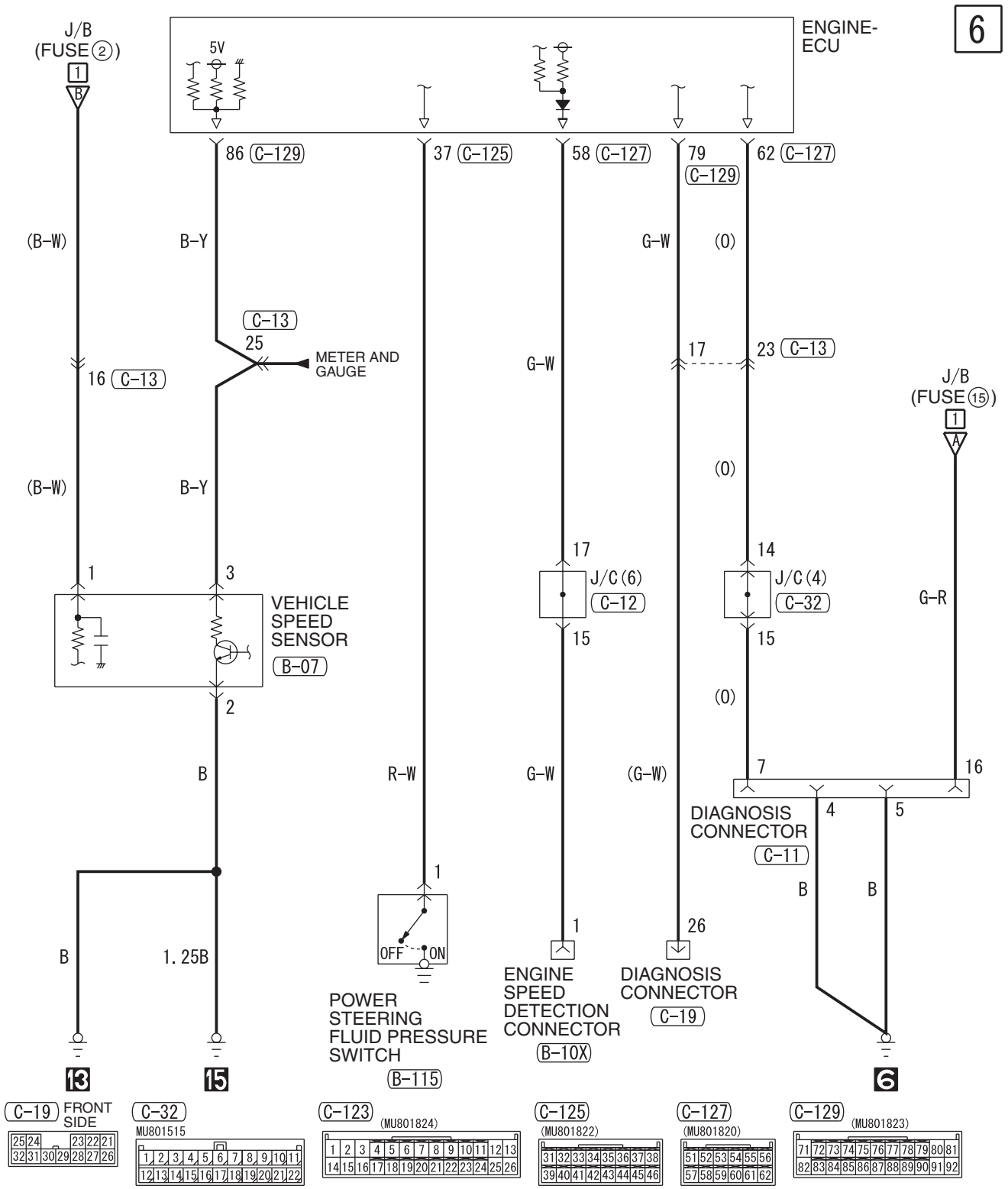

Wire colour code
B : Black LG : Light green G : Green L : Blue W : White Y : Yellow SB : Sky blue
BR : Brown O : Orange GR : Grey R : Red P : Pink V : Violet PU : Purple

H6J05E03CB

ENGINE CONTROL SYSTEM <4G1-M/T (RHD)>

M1901000804288

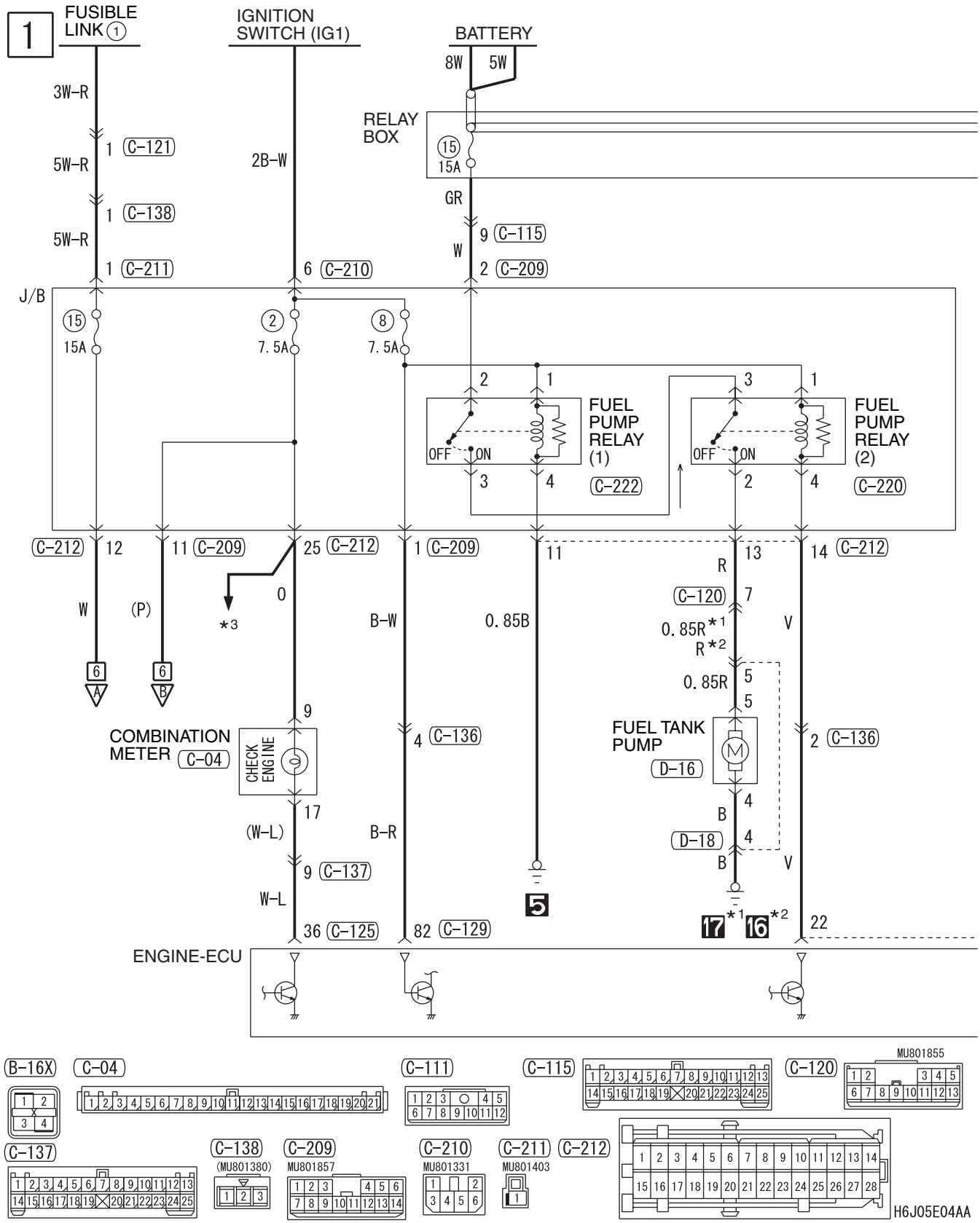

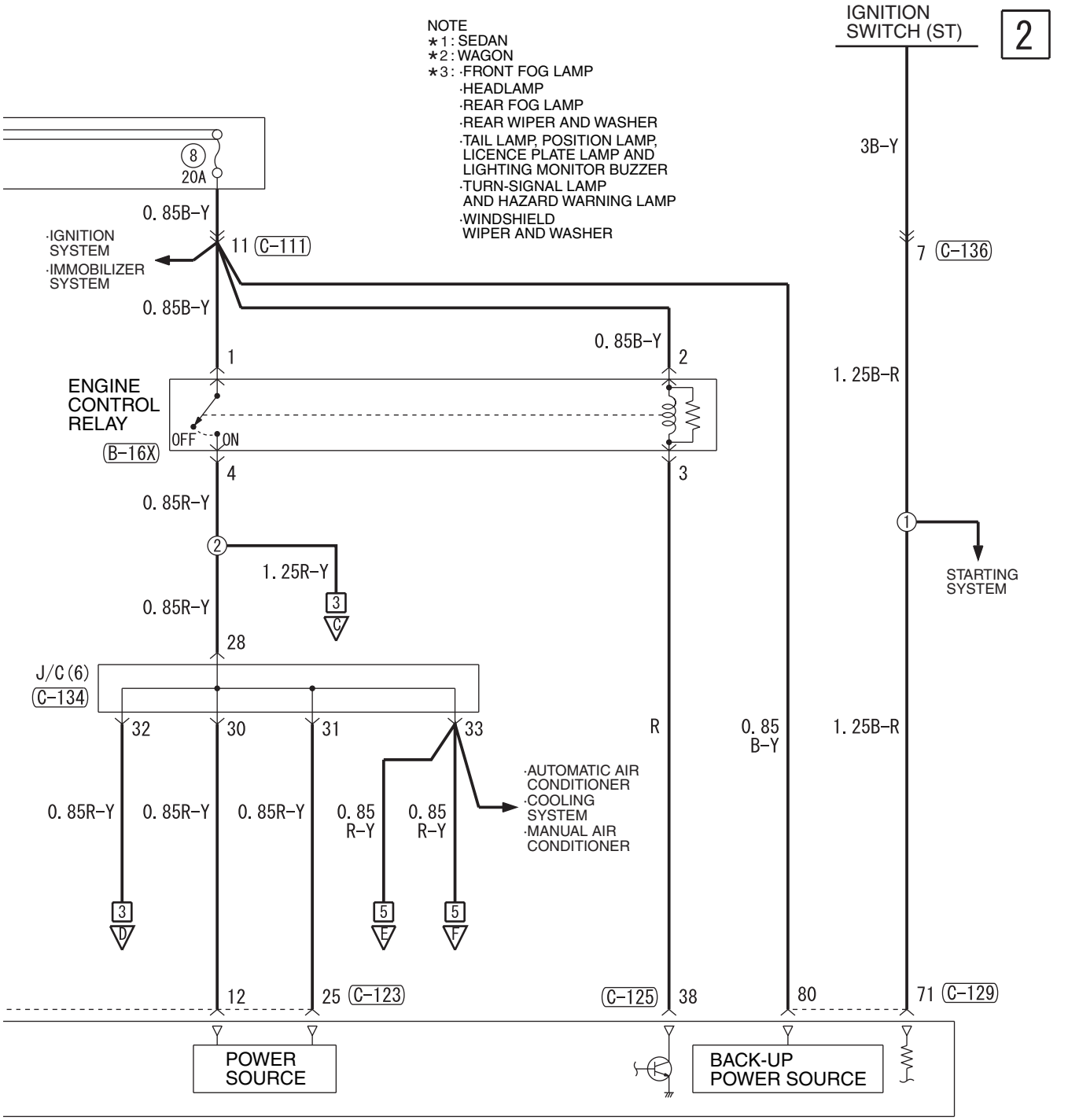

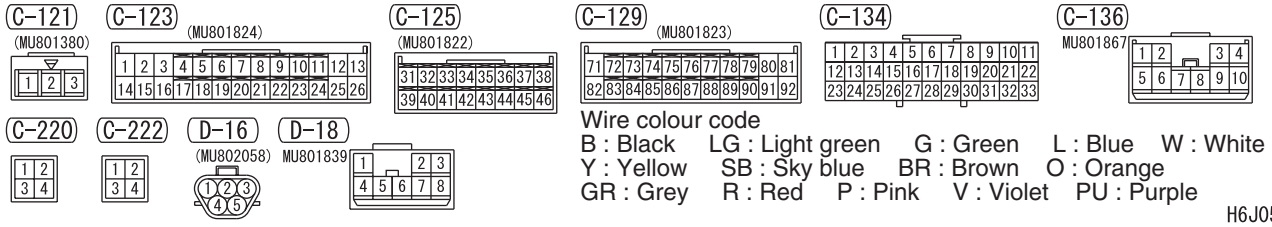

Wire colour code
B : Black LG : Light green G : Green L : Blue W : White
Y : Yellow SB : Sky blue BR : Brown O : Orange
GR : Grey R : Red P : Pink V : Violet PU : Purple

H6J05E04AB

ENGINE CONTROL SYSTEM <4G1-M/T (RHD)> (CONTINUED)

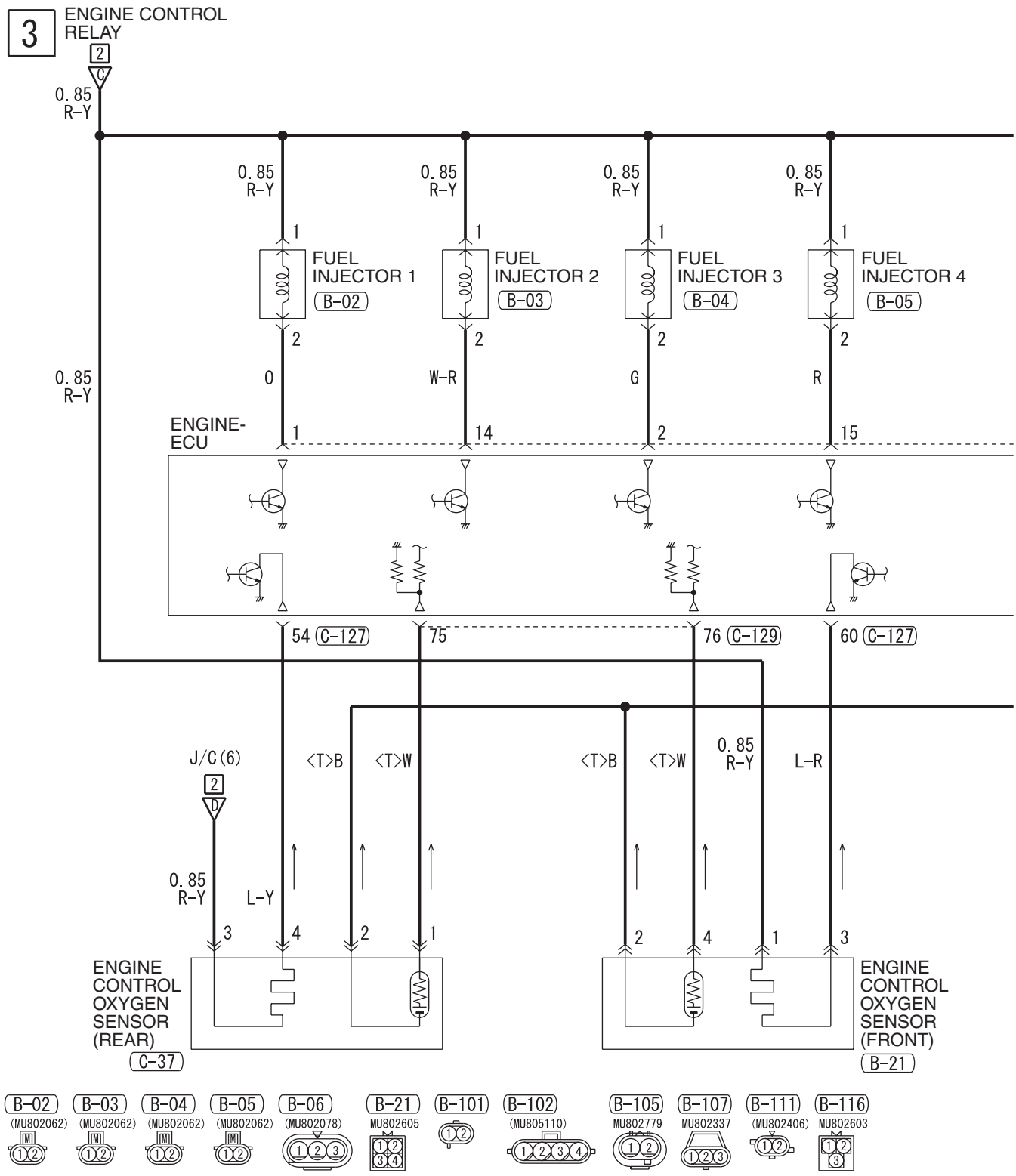

H6J05E04BA

4

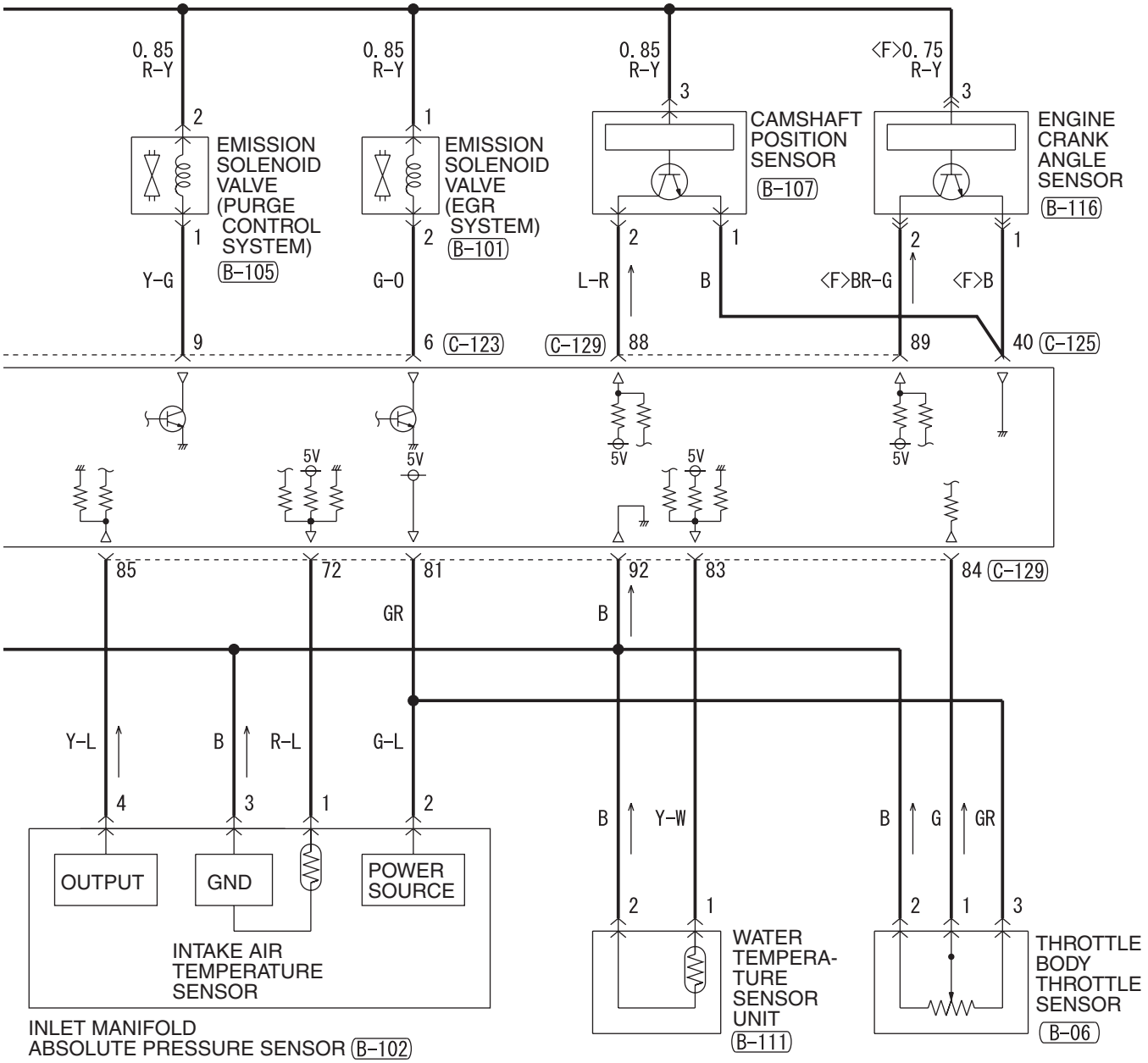

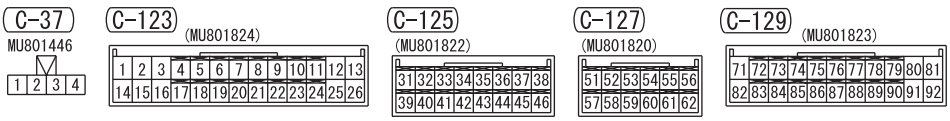

Wire colour code
B : Black LG : Light green G : Green L : Blue W : White Y : Yellow SB : Sky blue
BR : Brown O : Orange GR : Grey R : Red P : Pink V : Violet PU : Purple

H6J05E04BB

ENGINE CONTROL SYSTEM <4G1-M/T (RHD)> (CONTINUED)

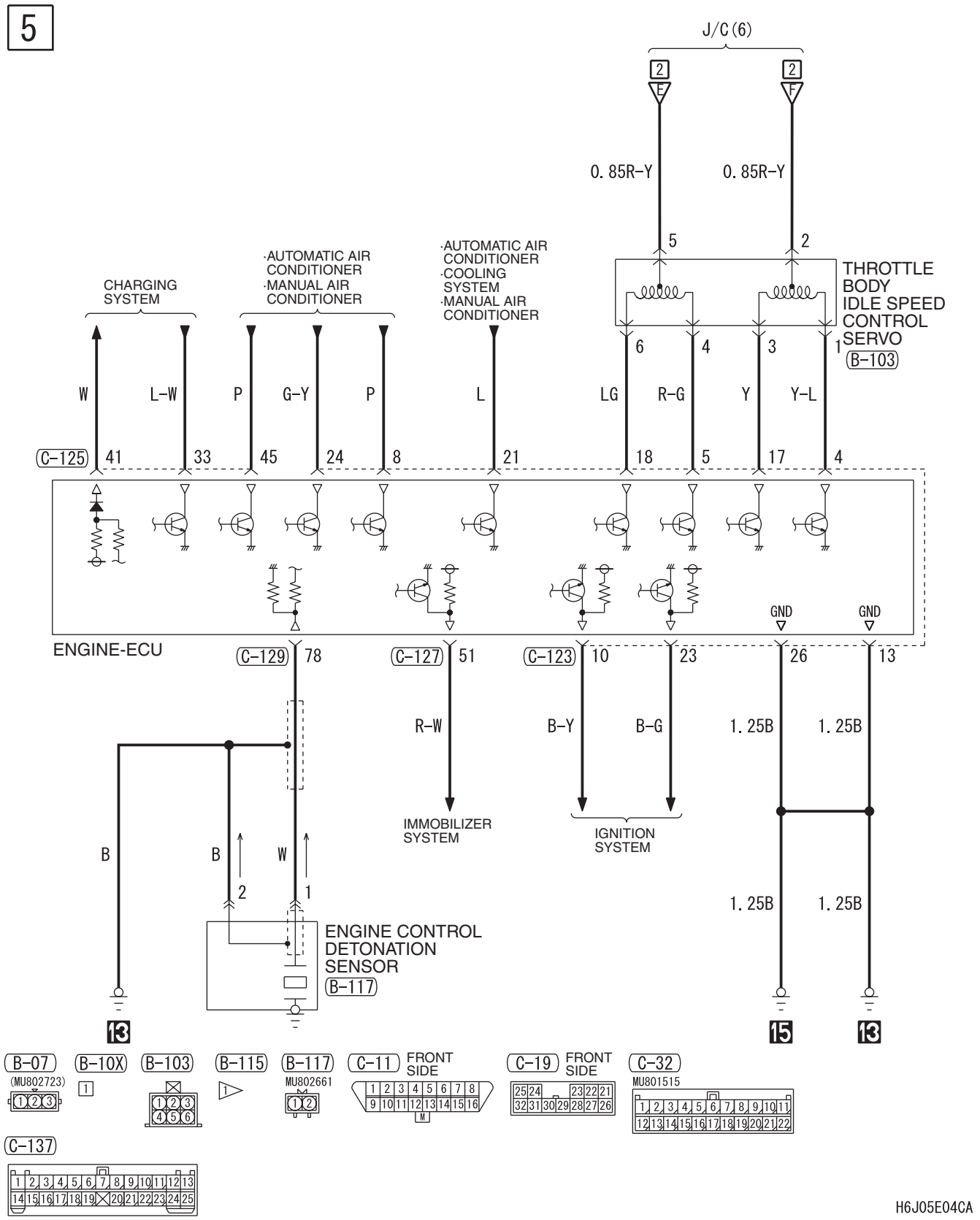

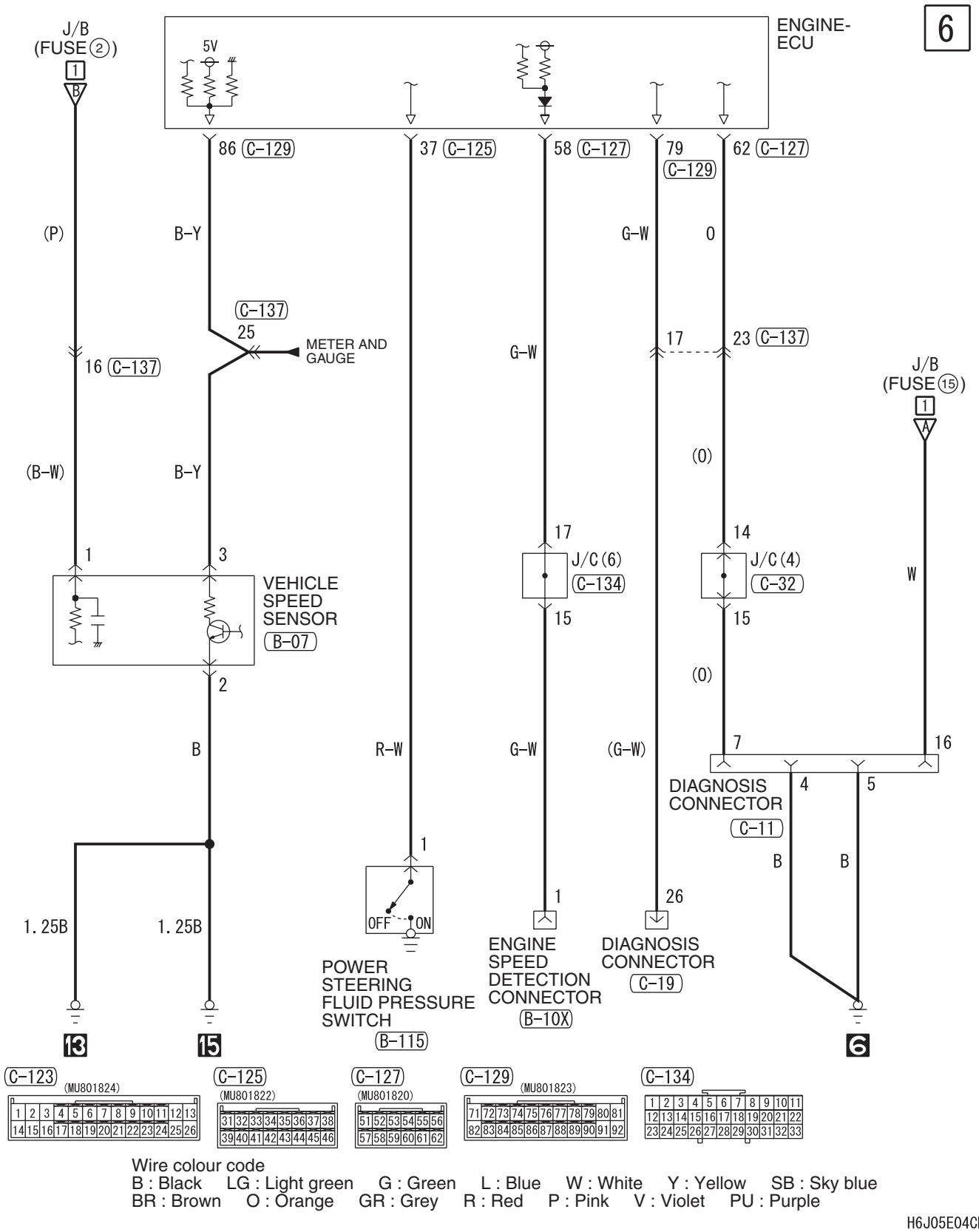

Wire colour code
B : Black LG : Light green G : Green L : Blue W : White Y : Yellow SB : Sky blue
BR : Brown O : Orange GR : Grey R : Red P : Pink V : Violet PU : Purple

H6J05E04CB

ENGINE CONTROL SYSTEM <4G1-A/T (LHD)>

M1901000804299

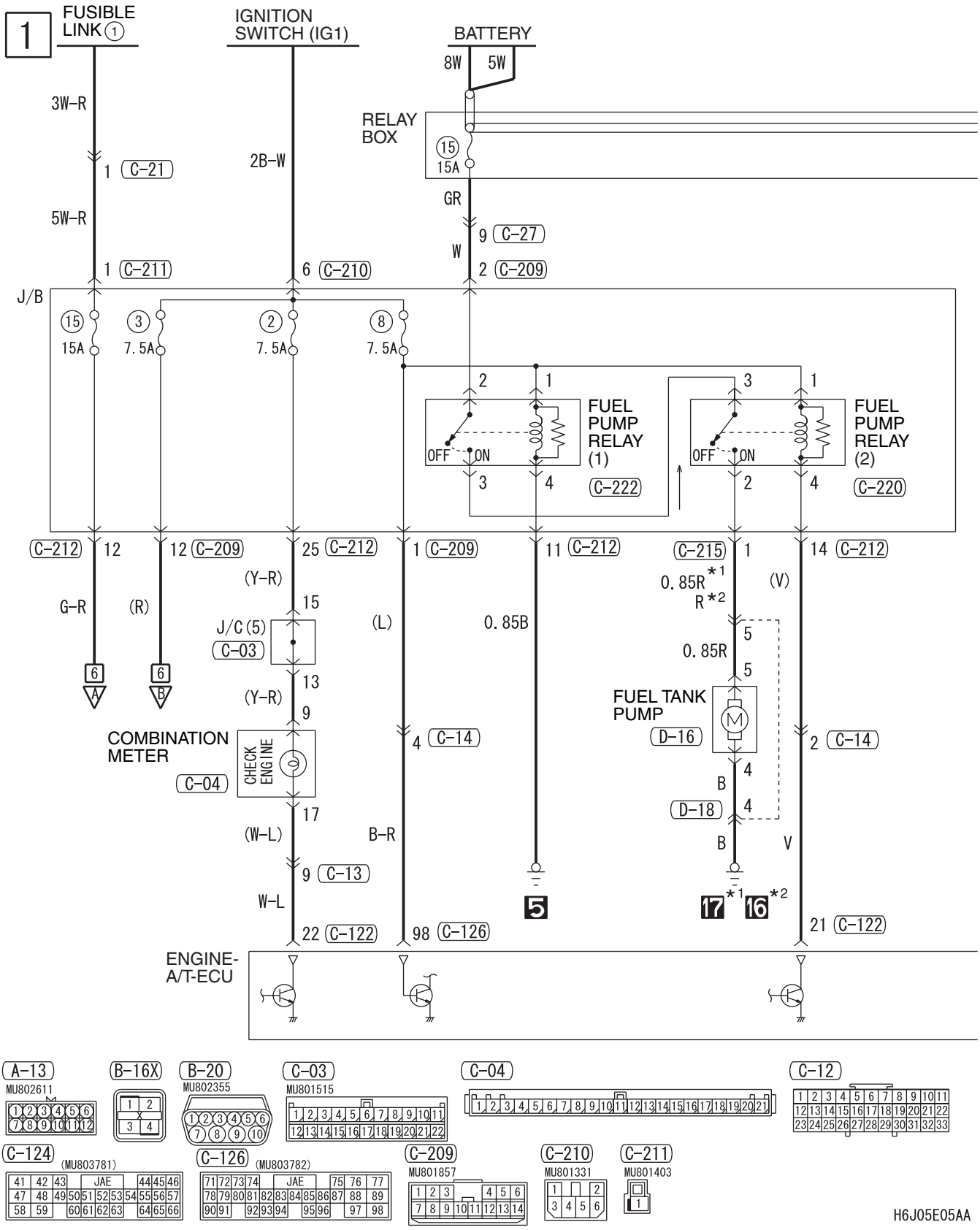

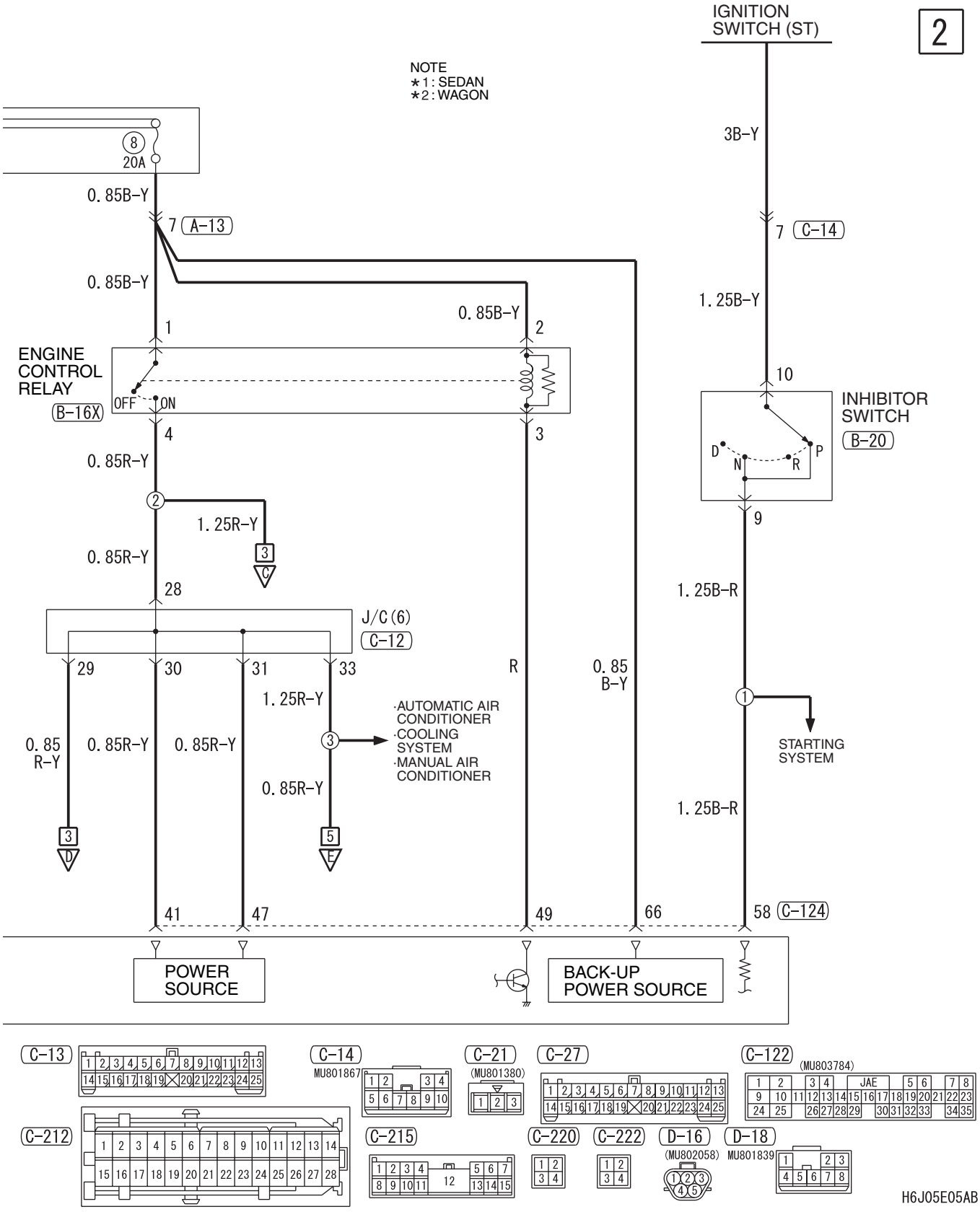
2
IGNITION SWITCH (ST)
NOTE
*1: SEDAN
*2: WAGON
8
20A
0.85B-Y
7 A-13
3B-Y
7 C-14
0.85B-Y
1.25B-Y
0.85B-Y
1
2
ENGINE CONTROL RELAY
B-16X
OFF
ON
10
INHIBITOR SWITCH
B-20
D
N
R
P
4
3
0.85R-Y
2
1.25R-Y
3
C
0.85R-Y
28
9
1.25B-R
J/C (6)
C-12
29
30
31
33
R
0.85 B-Y
1.25R-Y
·AUTOMATIC AIR CONDITIONER
·COOLING SYSTEM
·MANUAL AIR CONDITIONER
0.85 R-Y
0.85R-Y
0.85R-Y
3
1
STARTING SYSTEM
0.85R-Y
1.25B-R
3
D
5
E
41
47
49
66
58 C-124
POWER SOURCE
BACK-UP POWER SOURCE
C-13
C-14
MU801867
C-21
(MU801380)
C-27
C-122
(MU803784)
JAE
C-212
C-215
C-220
C-222
D-16
(MU802058)
D-18
MU801839
H6J05E05AB

ENGINE CONTROL SYSTEM <4G1-A/T (LHD)> (CONTINUED)

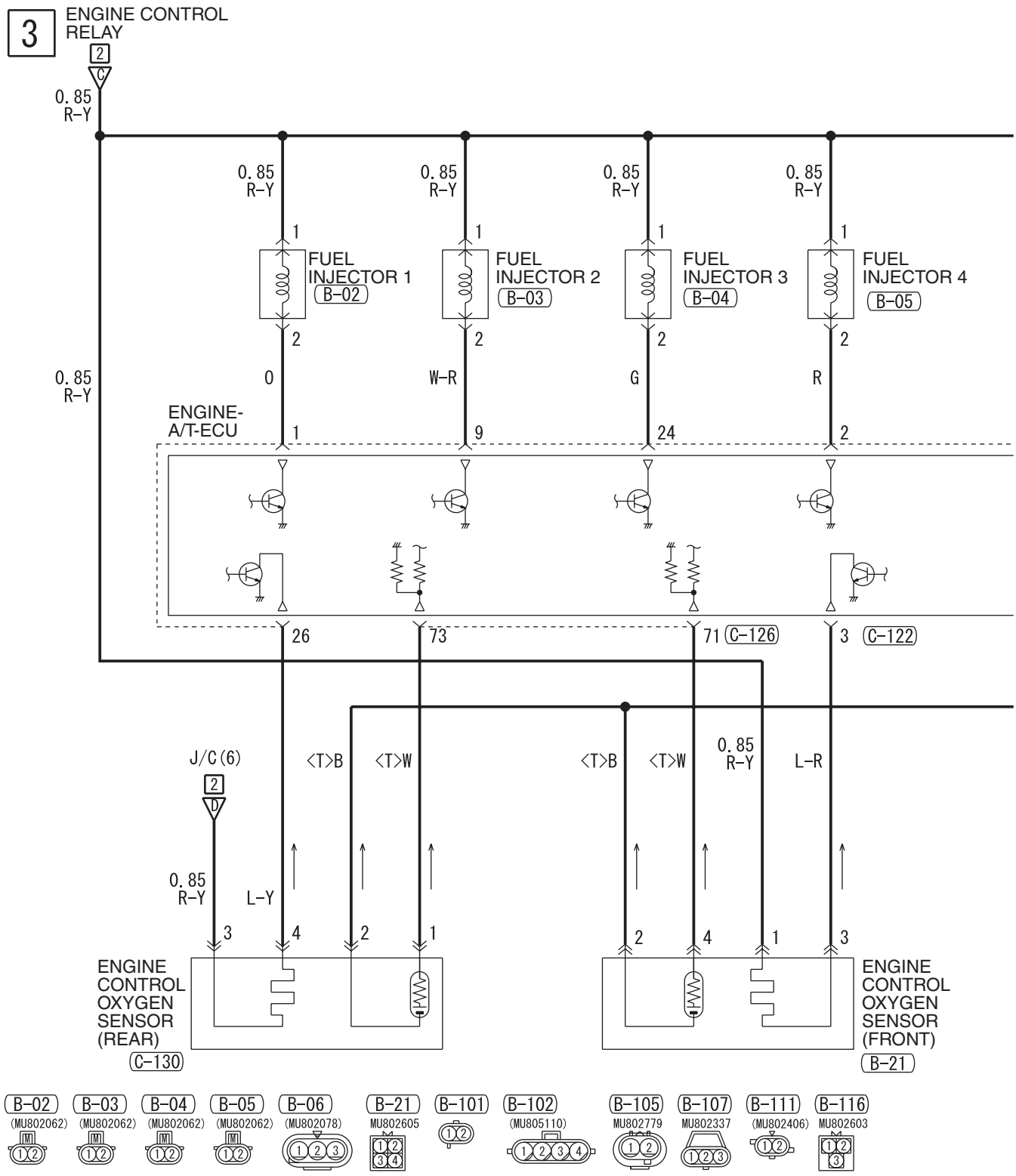

H6J05E05BA

4

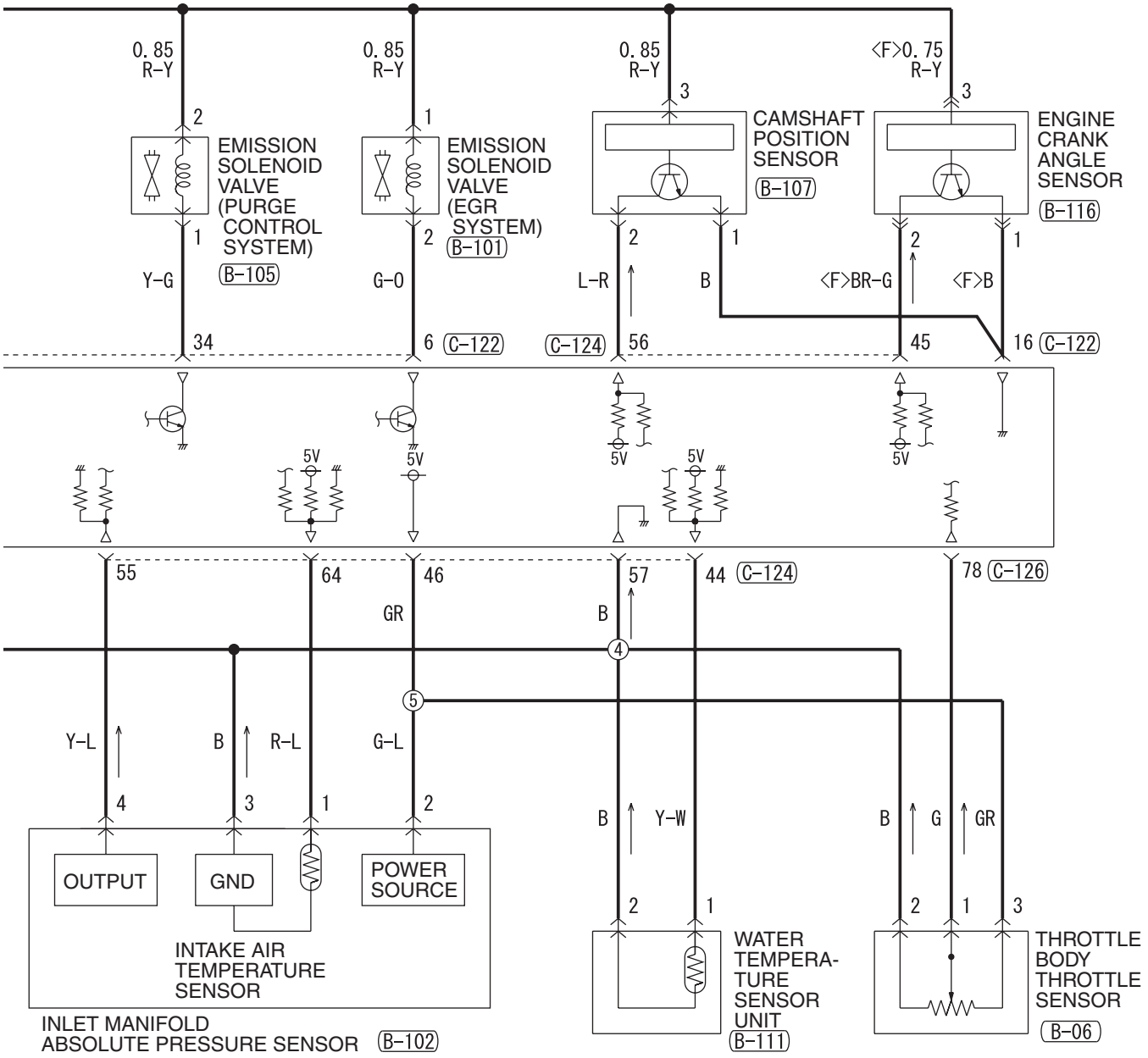

C-122 (MU803784)

1	2		3	4				JAE			5	6		7	8								
9	10	11	12	13	14	15	16	17	18	19	20	21	22	23									
24	25		26	27	28	29		30	31	32	33		34	35									

C-124 (MU803781)

41	42	43						JAE					44	45	46								
47	48	49	50	51	52	53	54	55	56	57													
58	59		60	61	62	63		64	65	66													

C-126 (MU803782)

71	72	73	74					JAE					75	76	77								
78	79	80	81	82	83	84	85	86	87	88	89												
90	91		92	93	94		95	96		97	98												

C-130 MU801446

1	2	3	4

Wire colour code
B : Black LG : Light green G : Green L : Blue W : White Y : Yellow SB : Sky blue
BR : Brown O : Orange GR : Grey R : Red P : Pink V : Violet PU : Purple

H6J05E05BB

ENGINE CONTROL SYSTEM <4G1-A/T (LHD)> (CONTINUED)

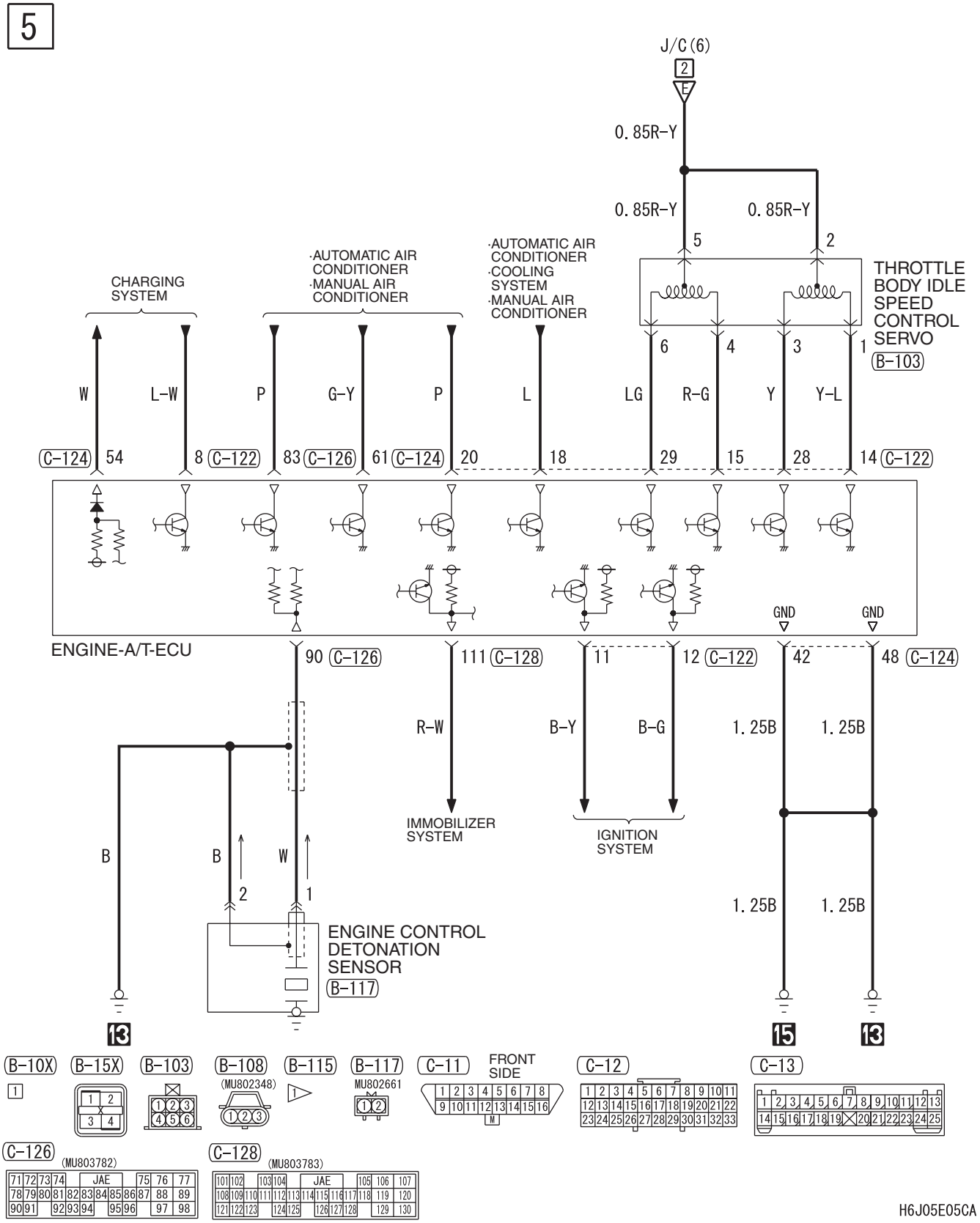

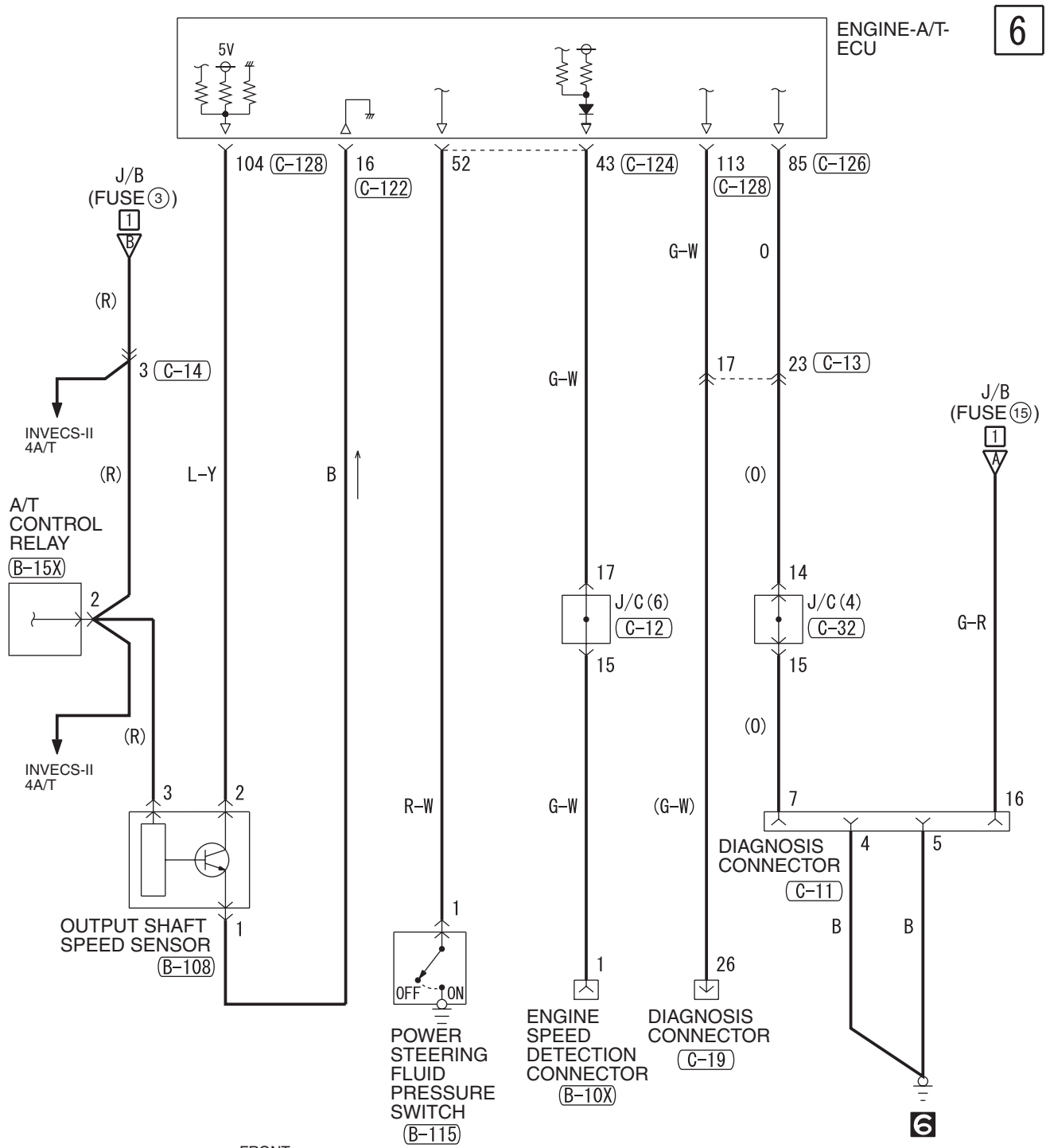

Wire colour code
B : Black LG : Light green G : Green L : Blue W : White Y : Yellow SB : Sky blue
BR : Brown O : Orange GR : Grey R : Red P : Pink V : Violet PU : Purple

H6J05E05CB

ENGINE CONTROL SYSTEM <4G1-A/T (RHD)>

M1901000804307

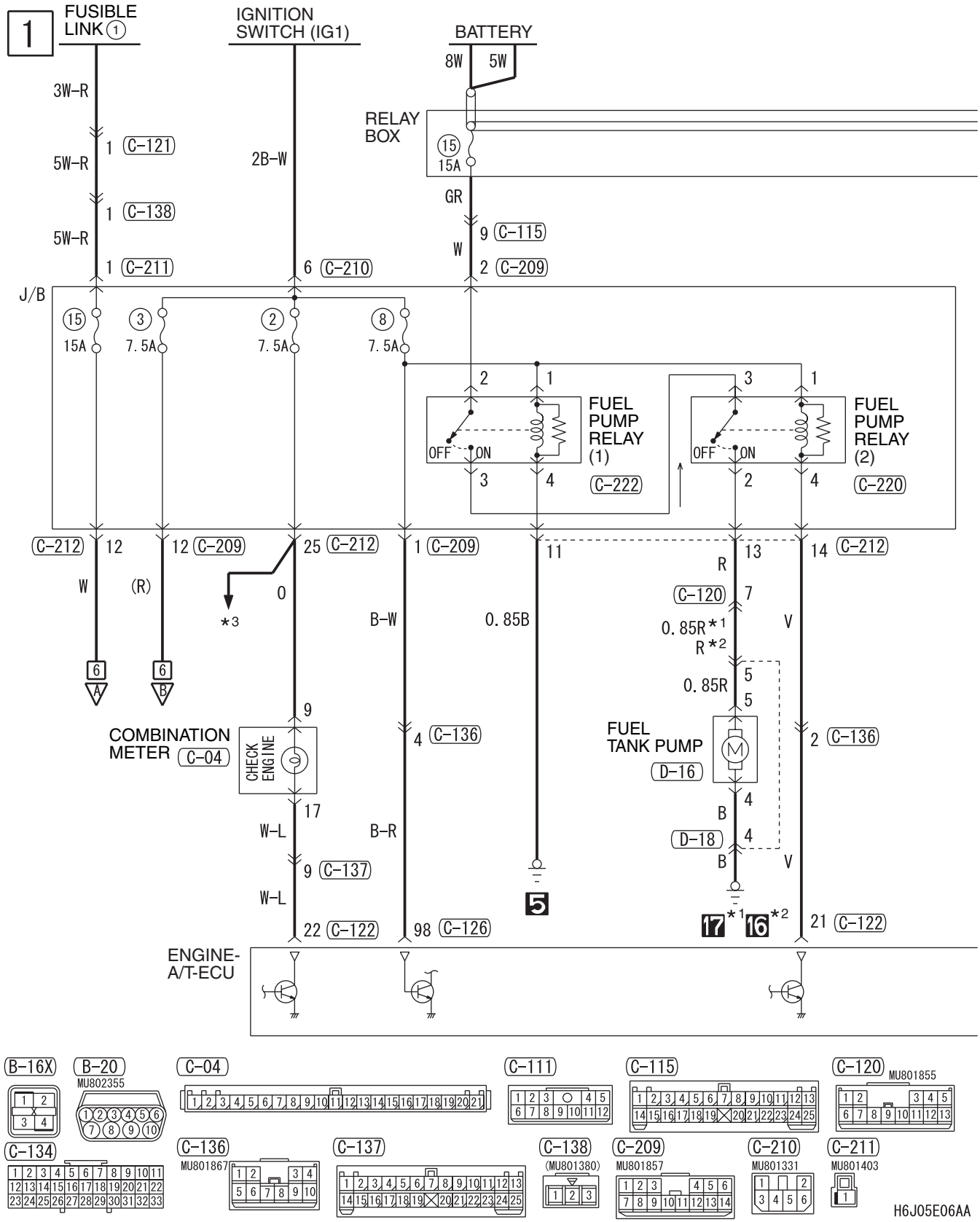

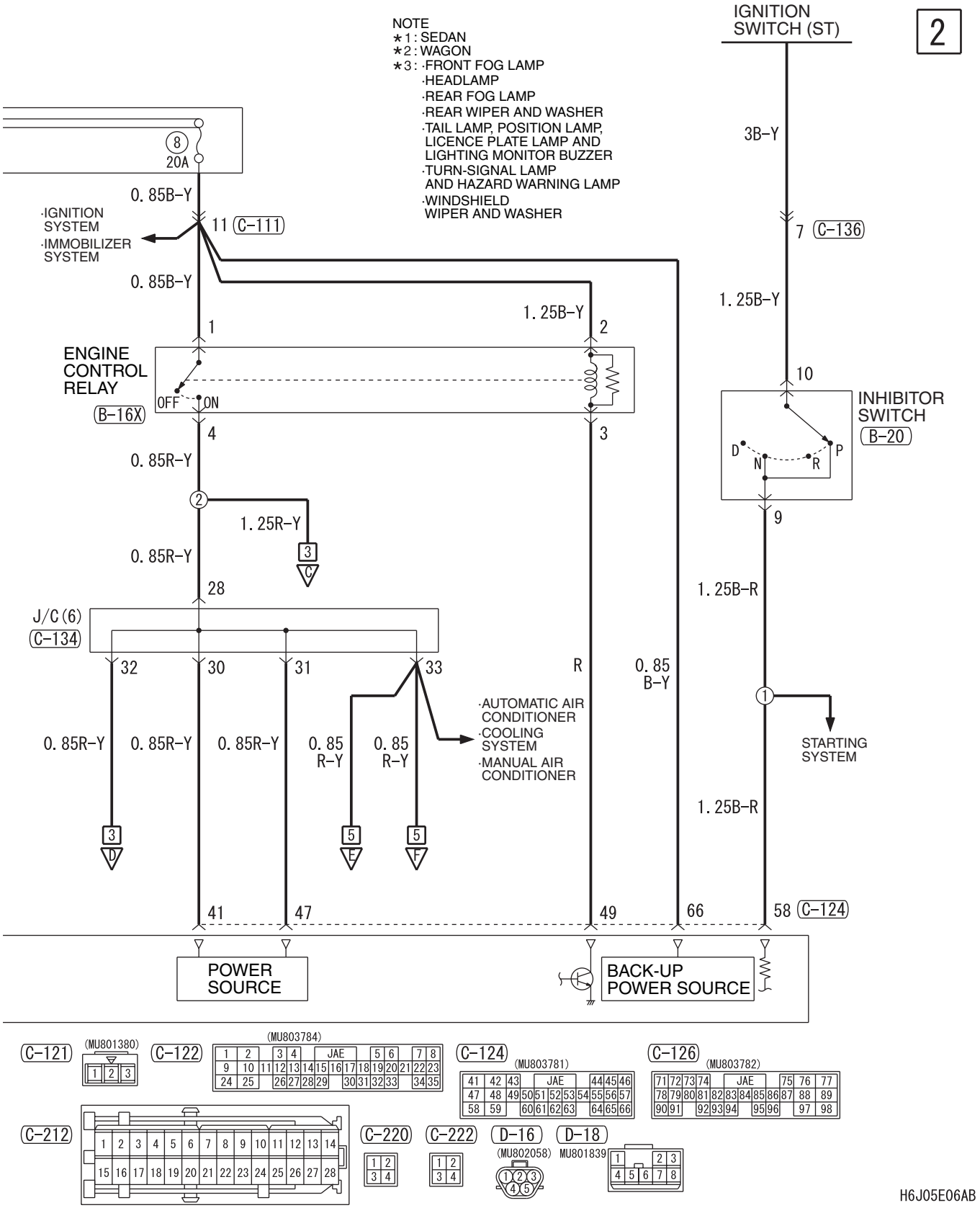
NOTE
*1: SEDAN
*2: WAGON
*3: ·FRONT FOG LAMP
·HEADLAMP
·REAR FOG LAMP
·REAR WIPER AND WASHER
·TAIL LAMP, POSITION LAMP, LICENCE PLATE LAMP AND LIGHTING MONITOR BUZZER
·TURN-SIGNAL LAMP AND HAZARD WARNING LAMP
·WINDSHIELD WIPER AND WASHER
IGNITION SWITCH (ST)
2
8
20A
0.85B-Y
·IGNITION SYSTEM
·IMMOBILIZER SYSTEM
11 C-111
0.85B-Y
1.25B-Y
1
2
ENGINE CONTROL RELAY
B-16X
OFF
ON
4
3
0.85R-Y
2
1.25R-Y
3
C
0.85R-Y
28
J/C(6)
C-134
32
30
31
33
R
0.85 B-Y
·AUTOMATIC AIR CONDITIONER
·COOLING SYSTEM
·MANUAL AIR CONDITIONER
0.85R-Y
0.85R-Y
0.85R-Y
0.85 R-Y
0.85 R-Y
3
D
5
E
5
F
41
47
49
66
POWER SOURCE
BACK-UP POWER SOURCE
3B-Y
7 C-136
1.25B-Y
10
INHIBITOR SWITCH
B-20
D
N
R
P
9
1.25B-R
1
STARTING SYSTEM
1.25B-R
58 C-124
C-121
(MU801380)
1 2 3
C-122
(MU803784)
1 2 3 4 JAE 5 6 7 8
9 10 11 12 13 14 15 16 17 18 19 20 21 22 23
24 25 26 27 28 29 30 31 32 33 34 35
C-124
(MU803781)
41 42 43 JAE 44 45 46
47 48 49 50 51 52 53 54 55 56 57
58 59 60 61 62 63 64 65 66
C-126
(MU803782)
71 72 73 74 JAE 75 76 77
78 79 80 81 82 83 84 85 86 87 88 89
90 91 92 93 94 95 96 97 98
C-212
1 2 3 4 5 6 7 8 9 10 11 12 13 14
15 16 17 18 19 20 21 22 23 24 25 26 27 28
C-220
1 2
3 4
C-222
1 2
3 4
D-16
(MU802058)
1 2 3
4 5
D-18
MU801839
1 2 3
4 5 6 7 8
H6J05E06AB

ENGINE CONTROL SYSTEM <4G1-M/T (RHD)> (CONTINUED)

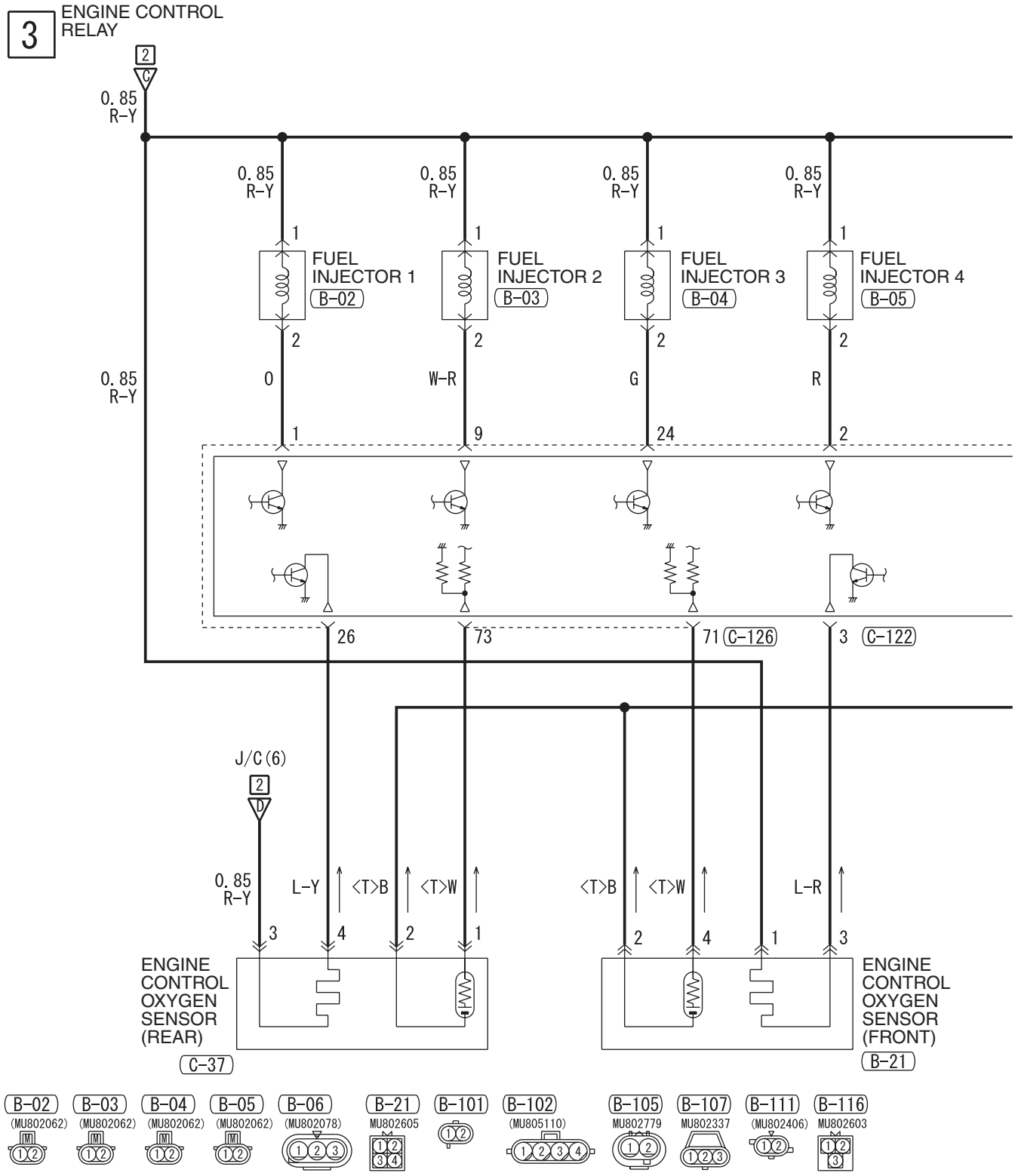

H6J05E06BA

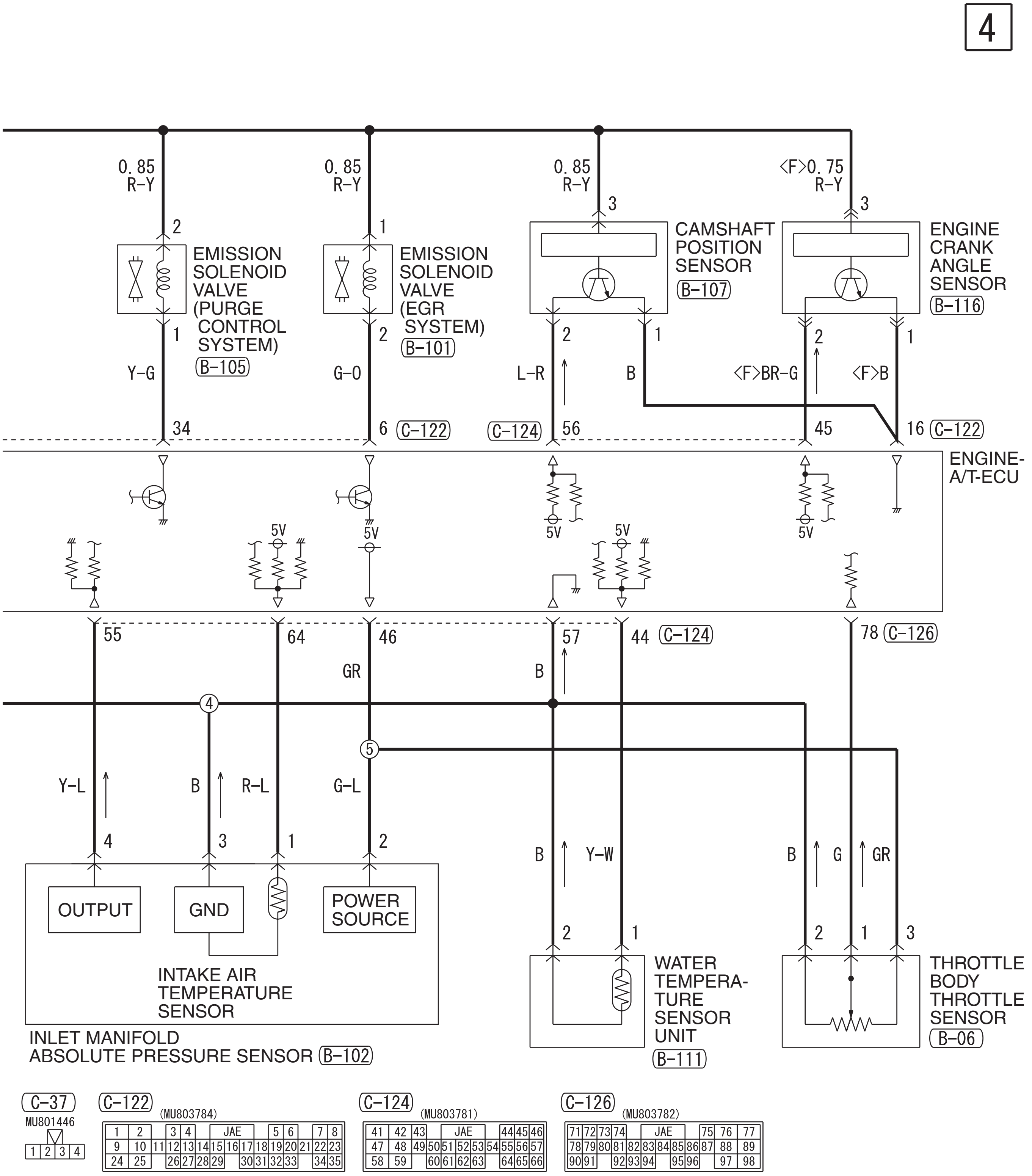

Wire colour code
B : Black LG : Light green G : Green L : Blue W : White Y : Yellow SB : Sky blue
BR : Brown O : Orange GR : Grey R : Red P : Pink V : Violet PU : Purple

H6J05E06BB

ENGINE CONTROL SYSTEM <4G1-A/T (RHD)> (CONTINUED)

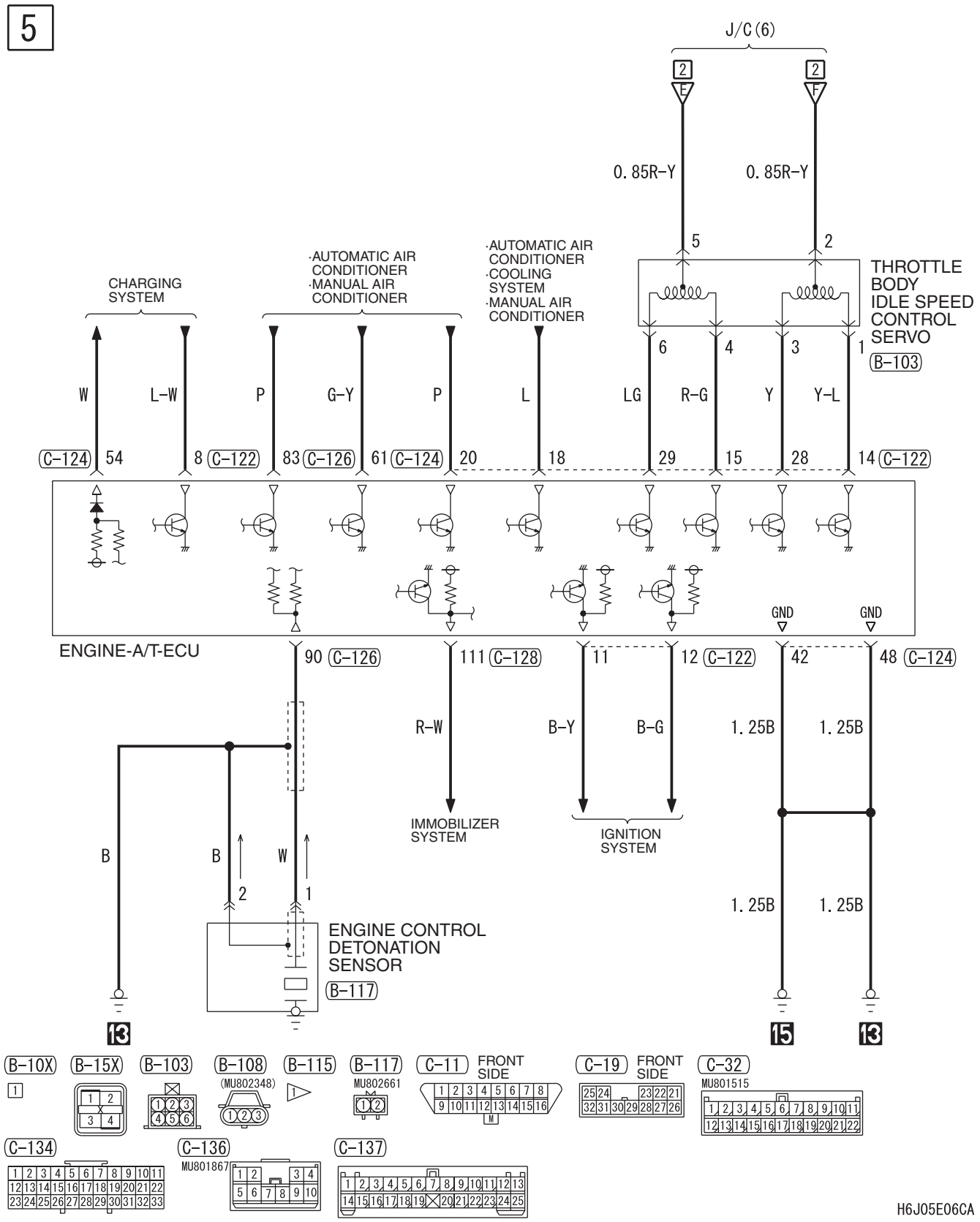

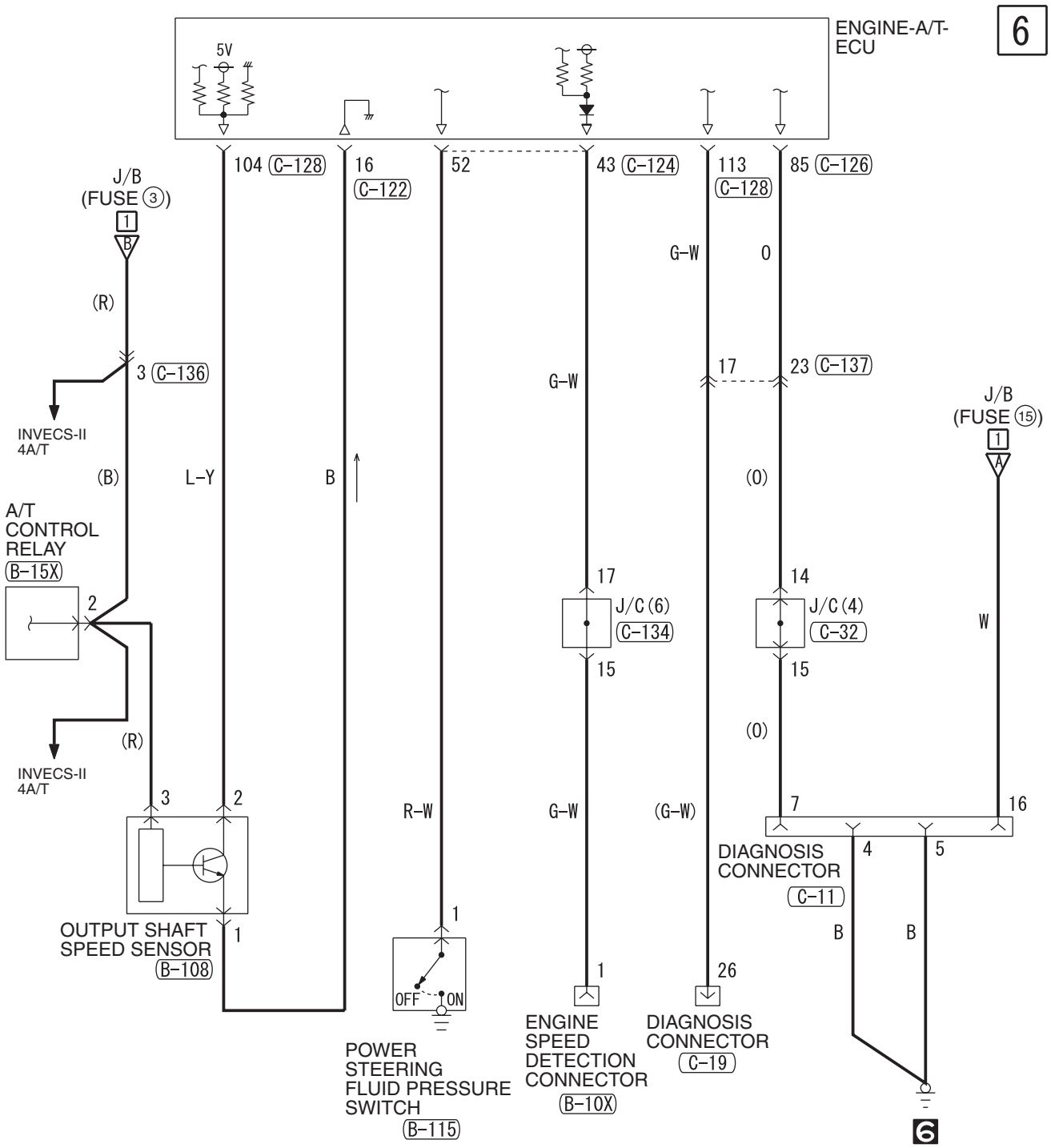

C-122 (MU803784)

1	2		3	4		JAE			5	6		7	8	
9	10	11	12	13	14	15	16	17	18	19	20	21	22	23
24	25		26	27	28	29		30	31	32	33		34	35

C-124 (MU803781)

41	42	43		JAE				44	45	46	
47	48	49	50	51	52	53	54	55	56	57	
58	59		60	61	62	63		64	65	66	

C-126 (MU803782)

71	72	73	74		JAE				75	76	77			
78	79	80	81	82	83	84	85	86	87	88	89			
90	91		92	93	94		95	96		97	98			

C-128 (MU803783)

101	102		103	104		JAE				105	106	107		
108	109	110	111	112	113	114	115	116	117	118	119	120		
121	122	123		124	125		126	127	128		129	130		

Wire colour code
B : Black LG : Light green G : Green L : Blue W : White Y : Yellow SB : Sky blue
BR : Brown O : Orange GR : Grey R : Red P : Pink V : Violet PU : Purple

H6J05E06CB

ENGINE CONTROL SYSTEM <4G6-M/T (LHD)>

M1901000804318

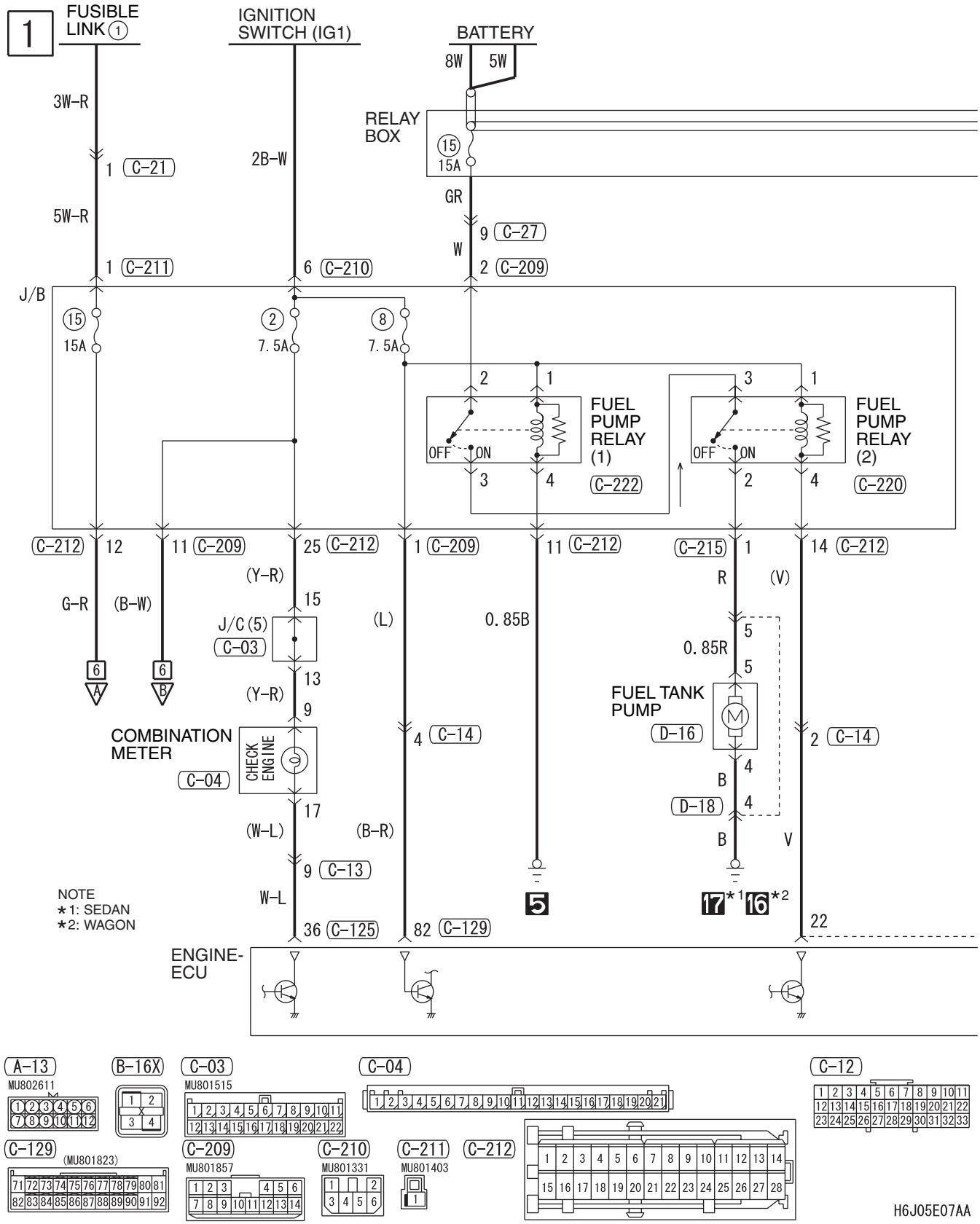

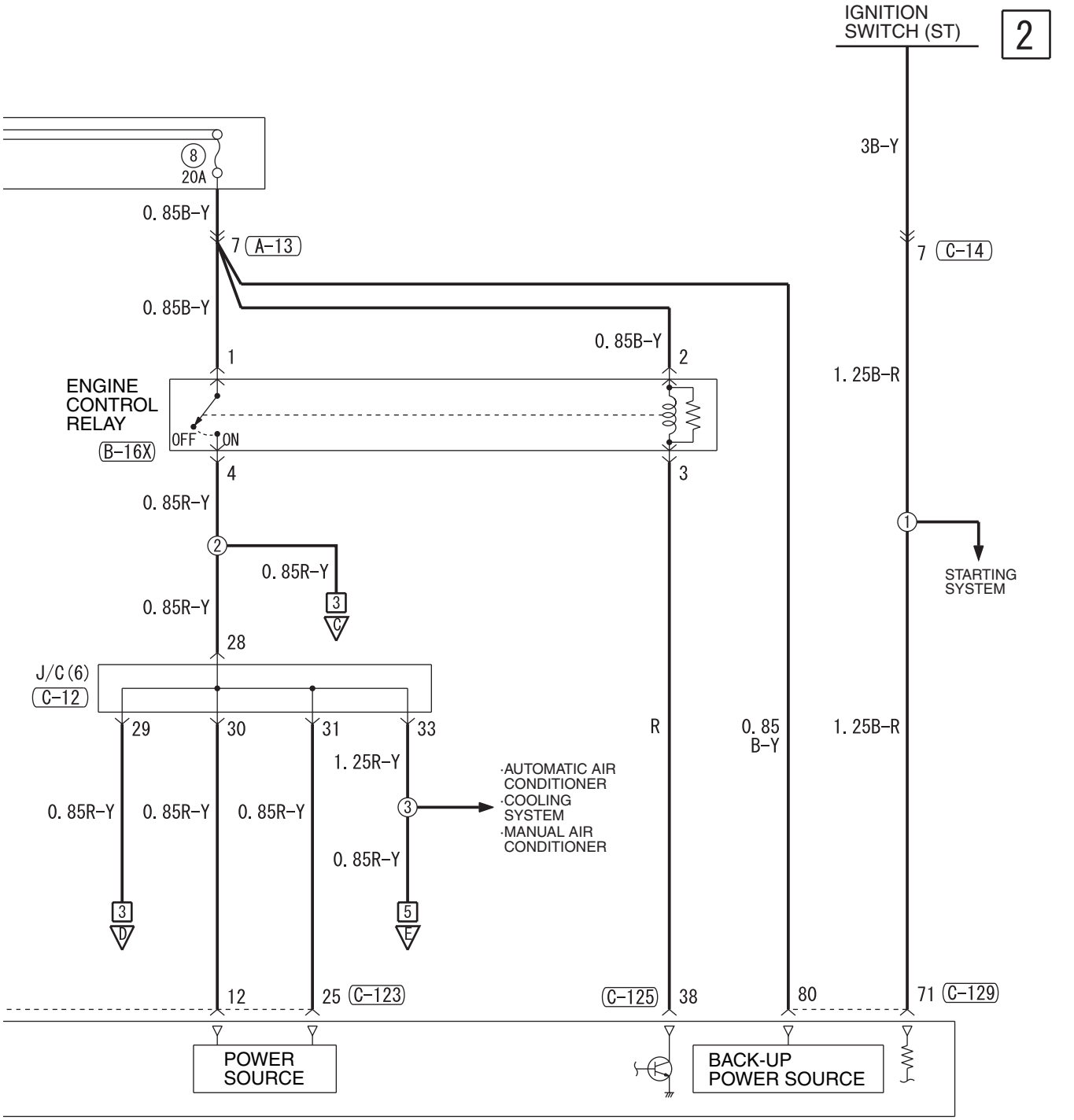

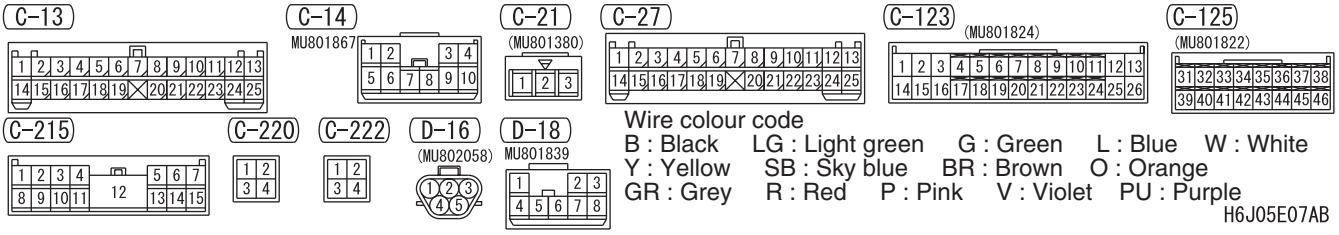

Wire colour code
B : Black LG : Light green G : Green L : Blue W : White
Y : Yellow SB : Sky blue BR : Brown O : Orange
GR : Grey R : Red P : Pink V : Violet PU : Purple

H6J05E07AB

ENGINE CONTROL SYSTEM <4G6-M/T (LHD)> (CONTINUED)

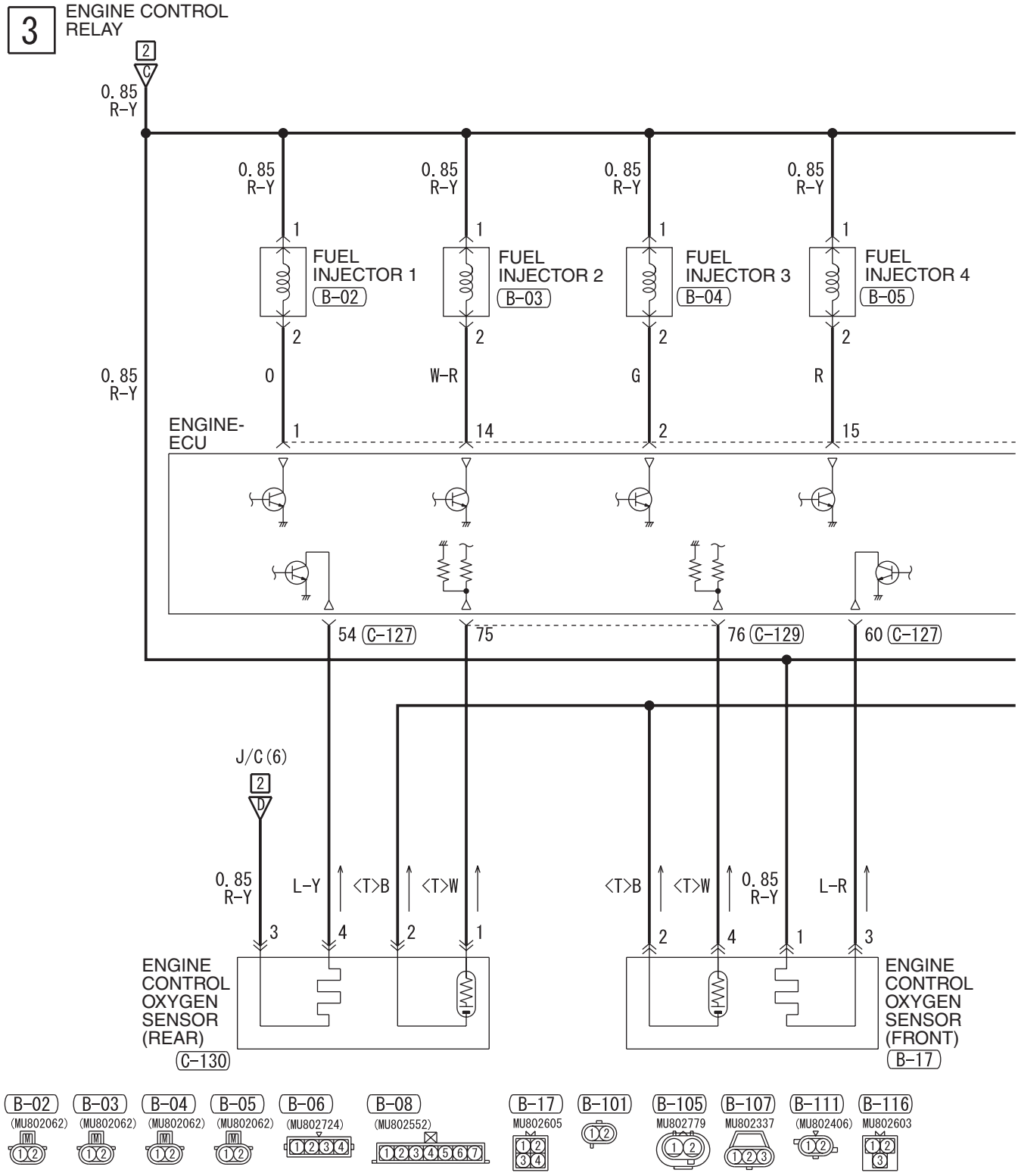

H6J05E07BA

4

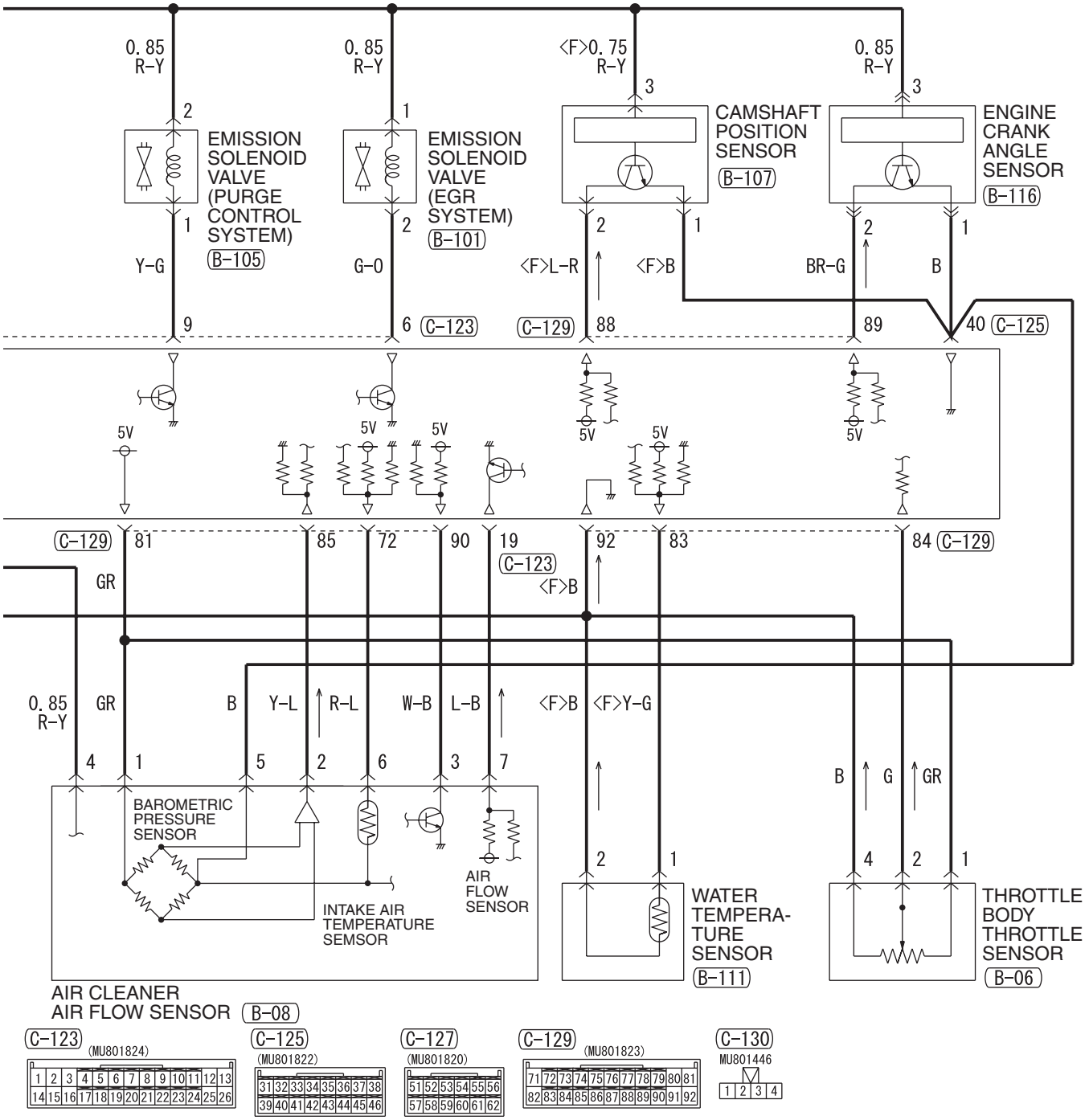

Wire colour code
B : Black LG : Light green G : Green L : Blue W : White Y : Yellow SB : Sky blue
BR : Brown O : Orange GR : Grey R : Red P : Pink V : Violet PU : Purple

H6J05E07BB

ENGINE CONTROL SYSTEM <4G6-M/T (LHD)> (CONTINUED)

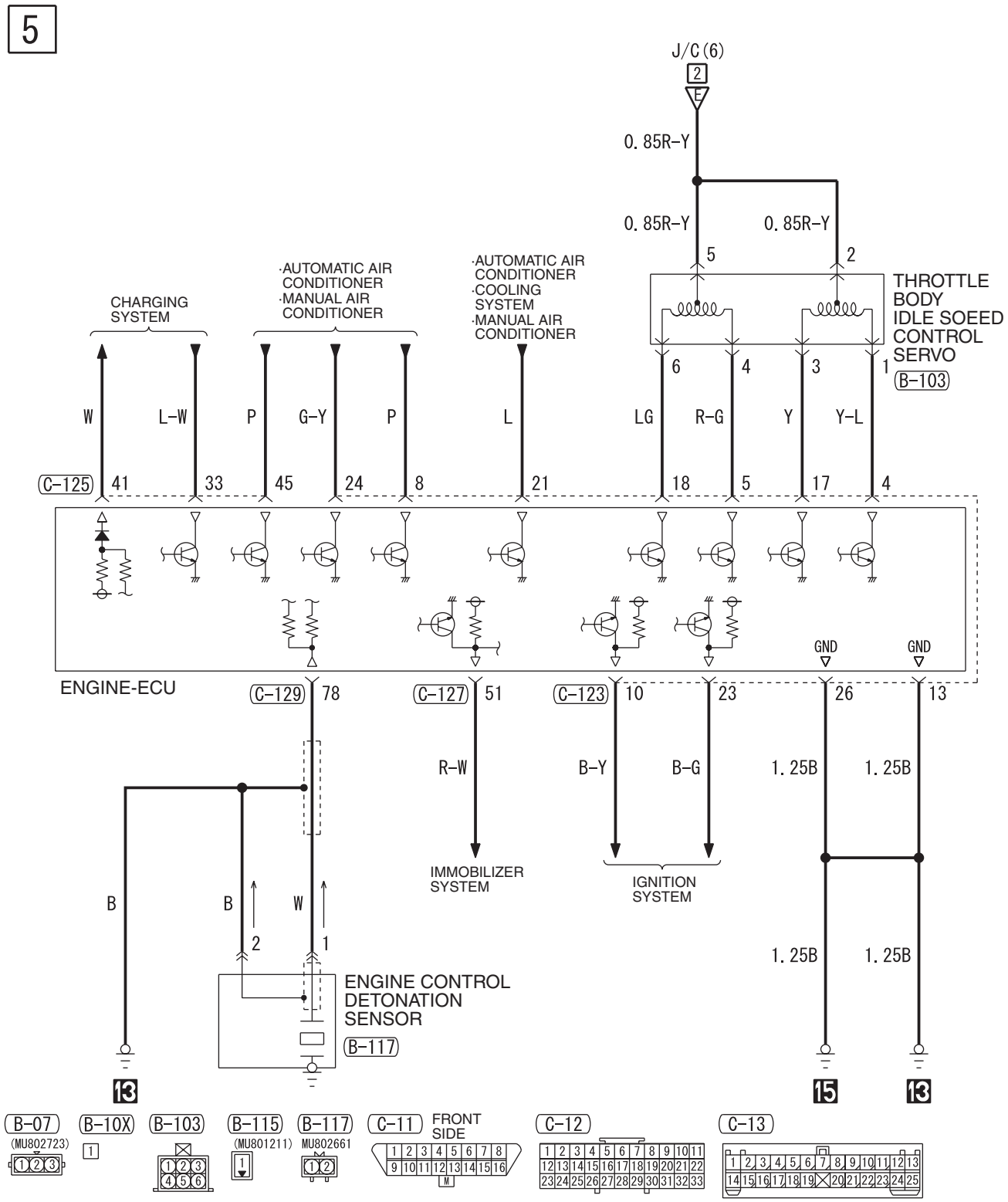

H6J05E07CA

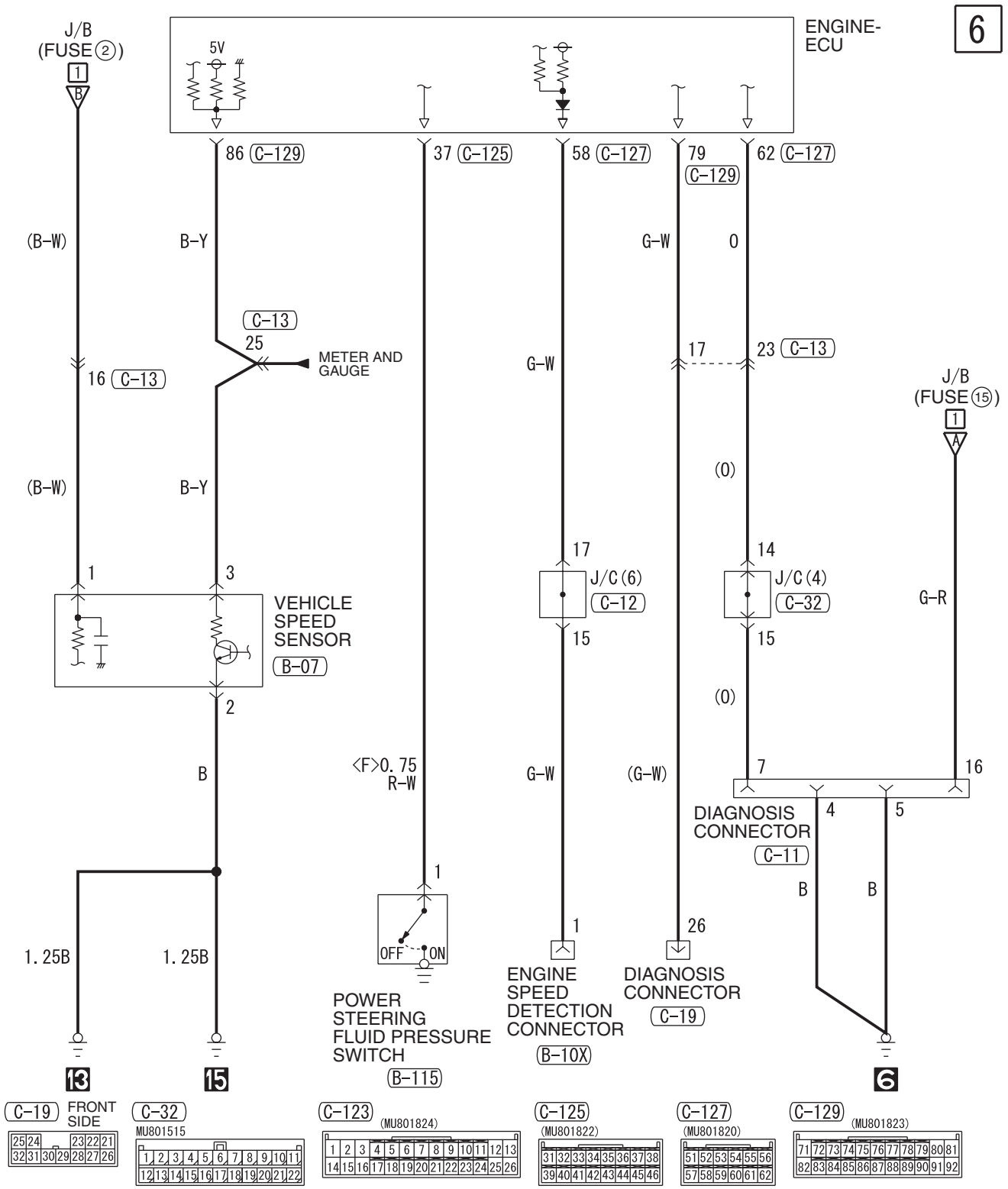

Wire colour code
B : Black LG : Light green G : Green L : Blue W : White Y : Yellow SB : Sky blue
BR : Brown O : Orange GR : Grey R : Red P : Pink V : Violet PU : Purple

H6J05E07CB

ENGINE CONTROL SYSTEM <4G6-M/T (RHD)>

M1901000804329

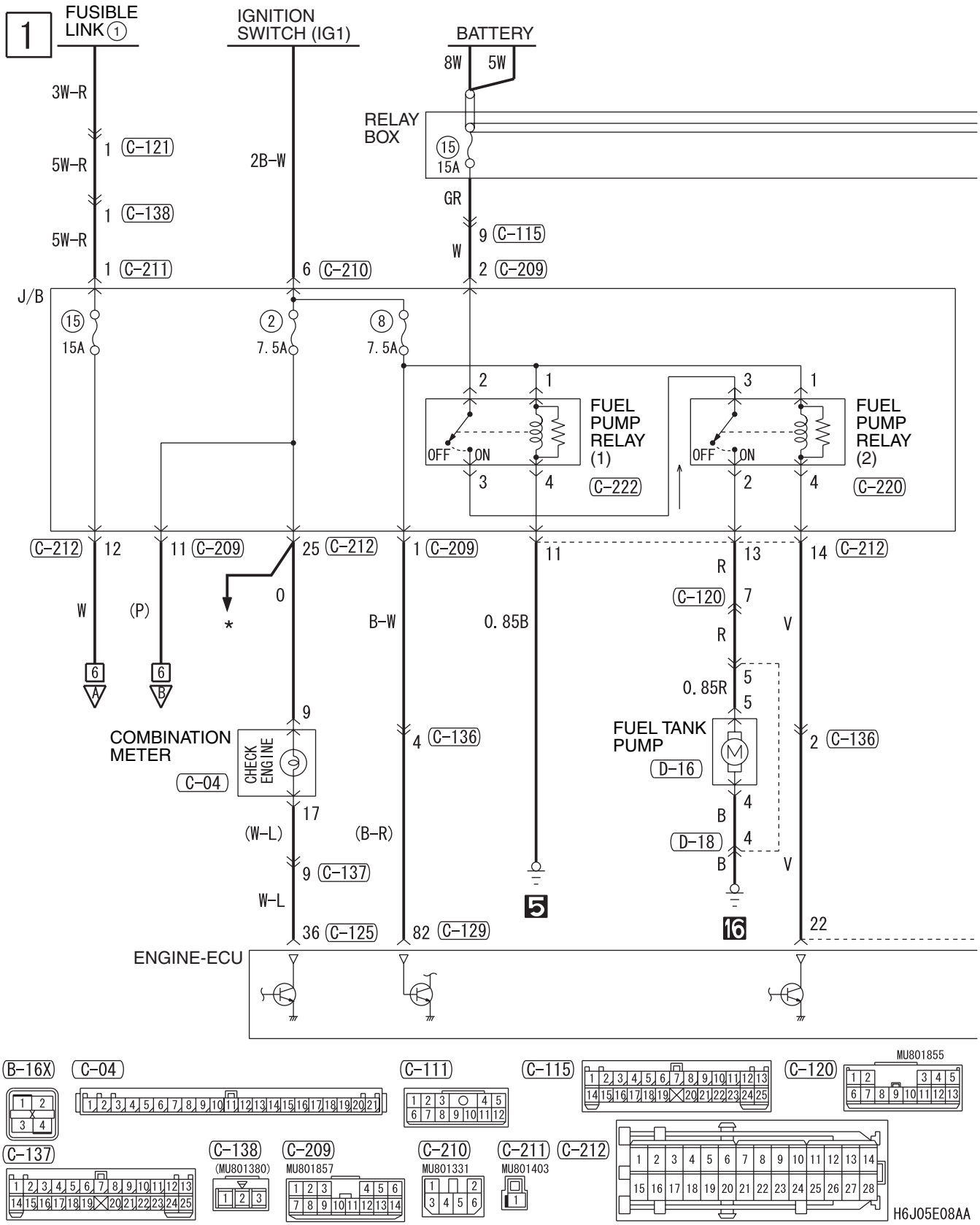

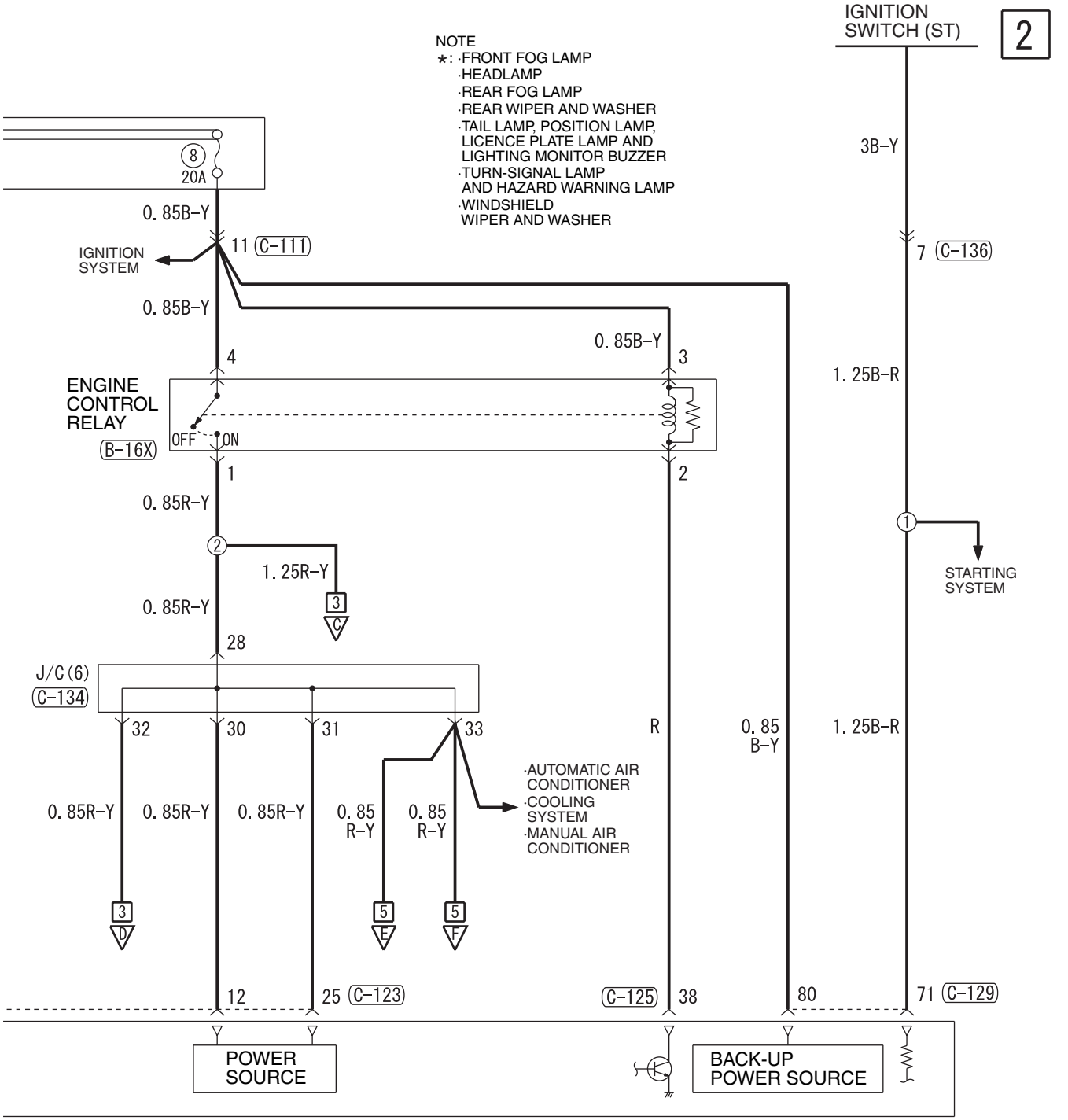

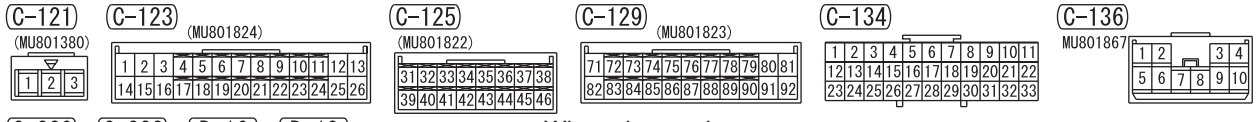

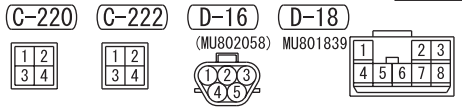

Wire colour code
B : Black LG : Light green G : Green L : Blue W : White
Y : Yellow SB : Sky blue BR : Brown O : Orange
GR : Grey R : Red P : Pink V : Violet PU : Purple

H6J05E08AB

ENGINE CONTROL SYSTEM <4G6-M/T (RHD)> (CONTINUED)

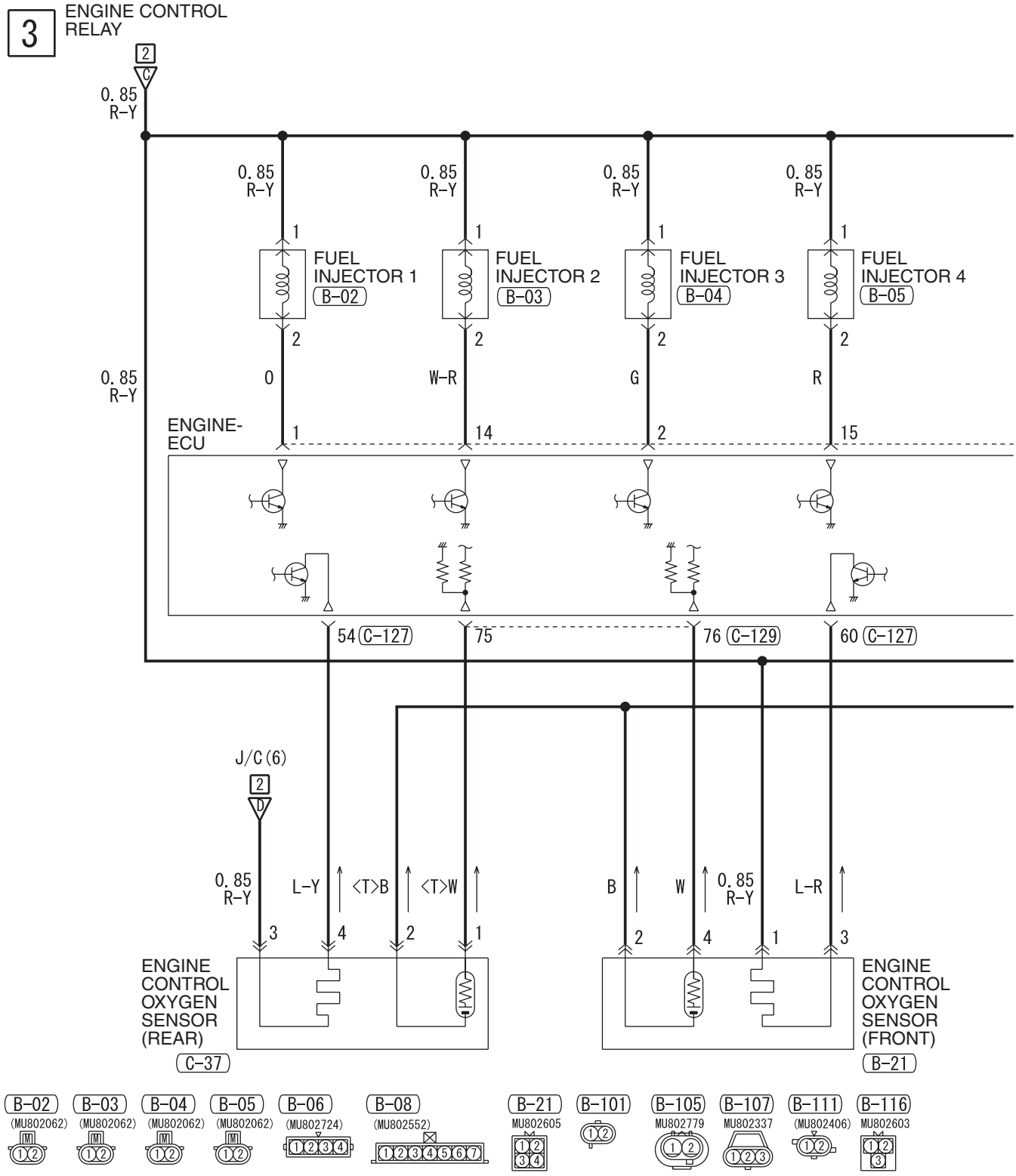

H6J05E08BA

4

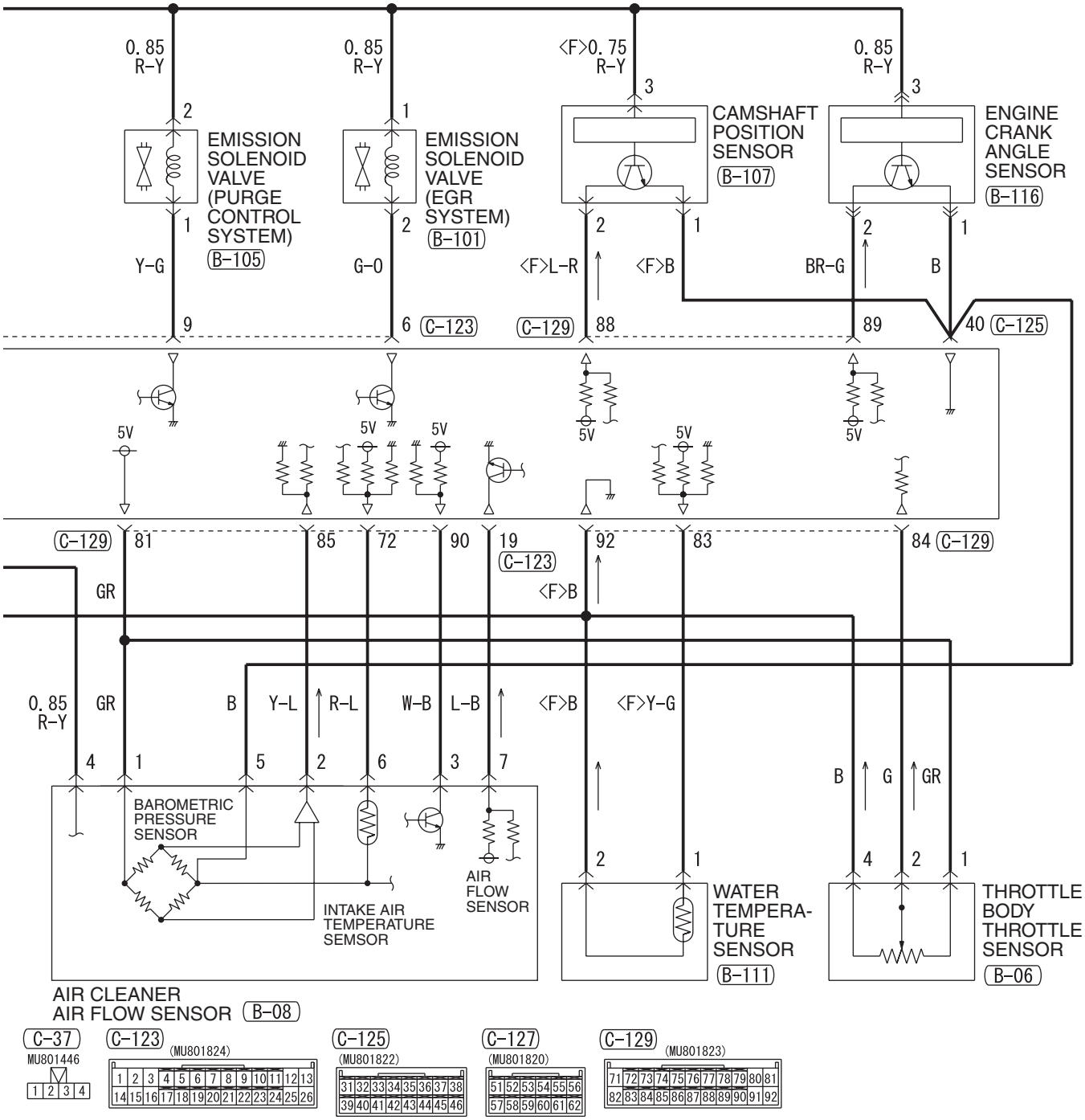

Wire colour code
B : Black LG : Light green G : Green L : Blue W : White Y : Yellow SB : Sky blue
BR : Brown O : Orange GR : Grey R : Red P : Pink V : Violet PU : Purple

H6J05E08BB

ENGINE CONTROL SYSTEM <4G6-M/T (RHD)> (CONTINUED)

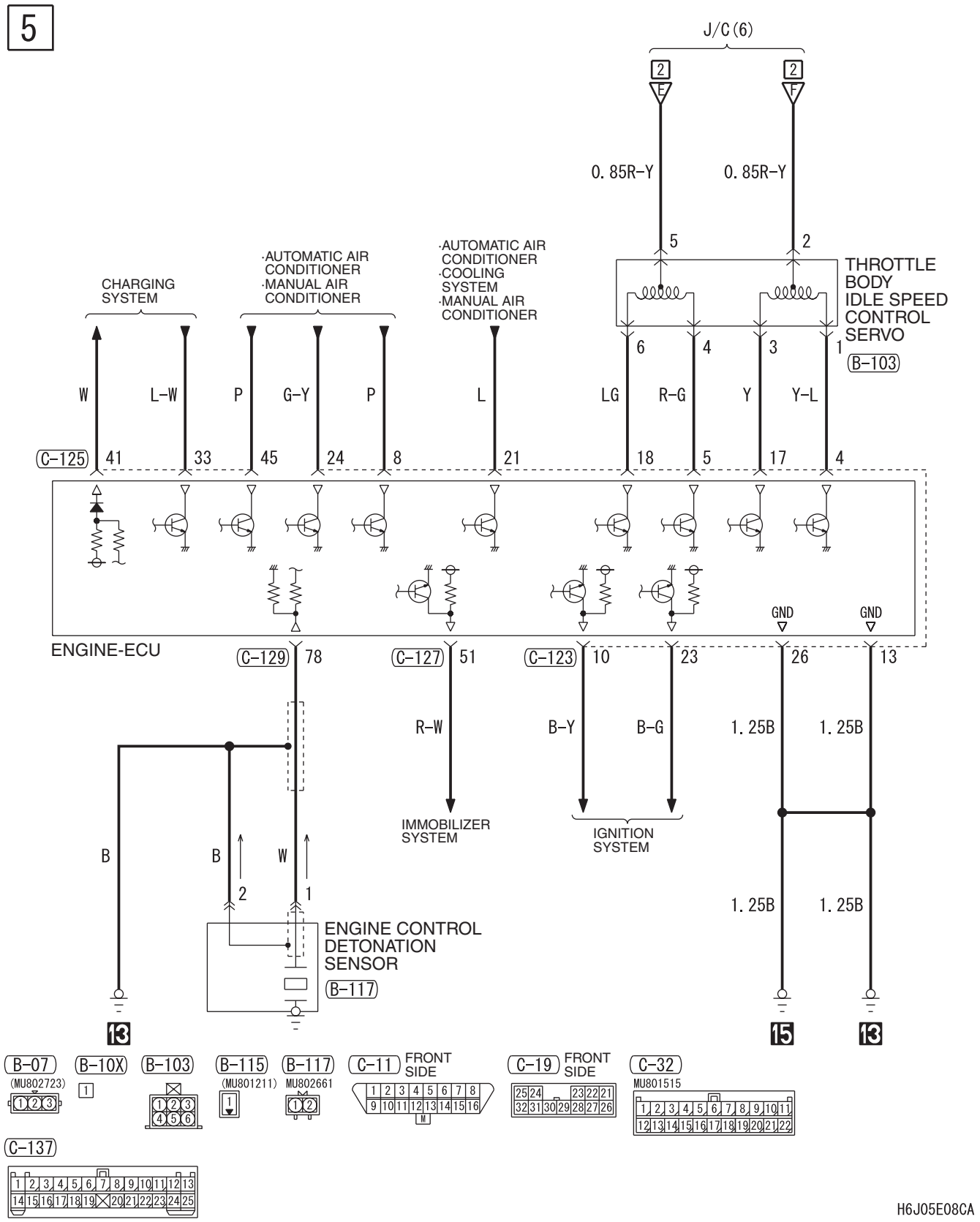

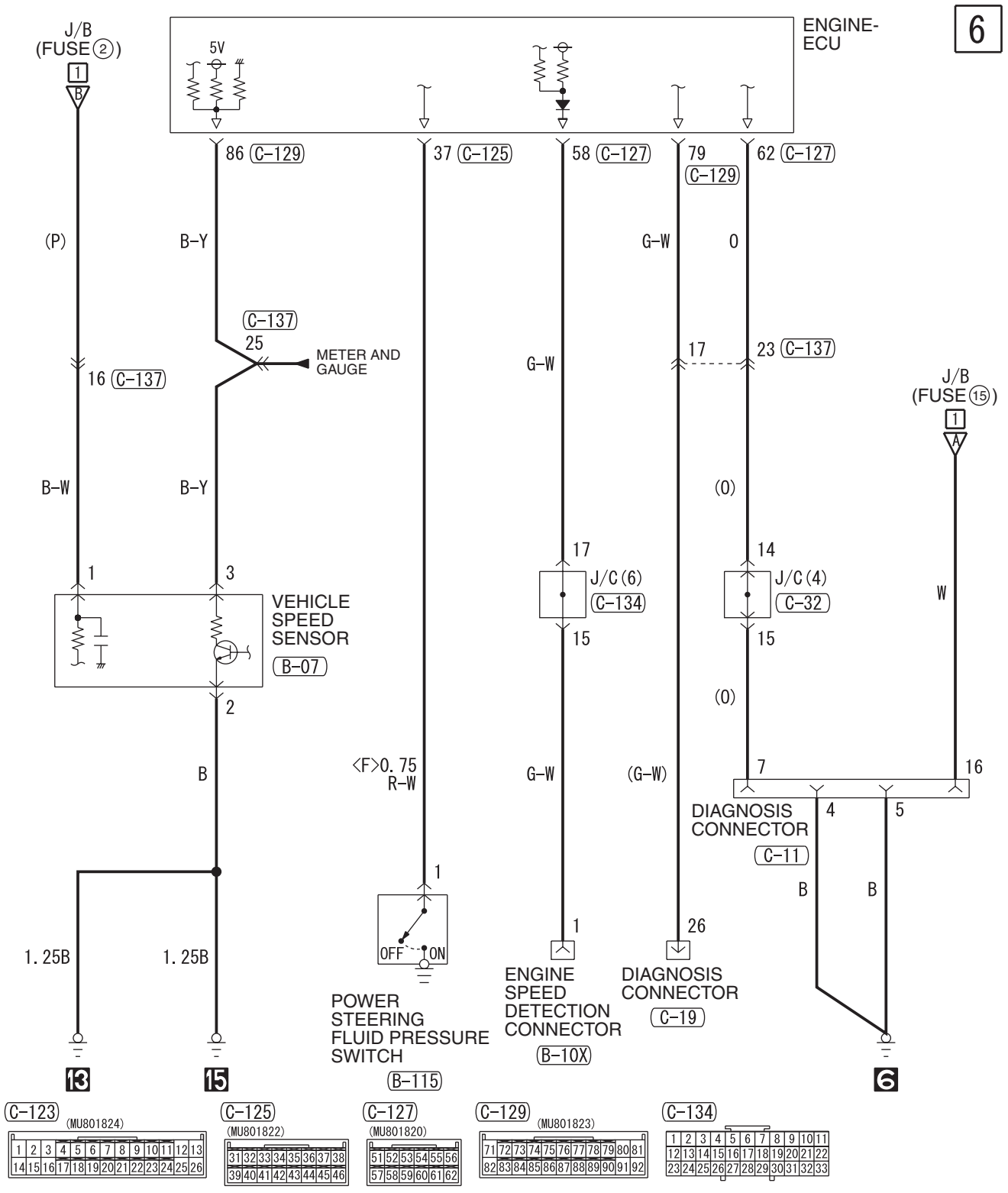

Wire colour code
B : Black LG : Light green G : Green L : Blue W : White Y : Yellow SB : Sky blue
BR : Brown O : Orange GR : Grey R : Red P : Pink V : Violet PU : Purple

H6J05E08CB

ENGINE CONTROL SYSTEM <4G6-A/T (LHD)>

M1901000804330

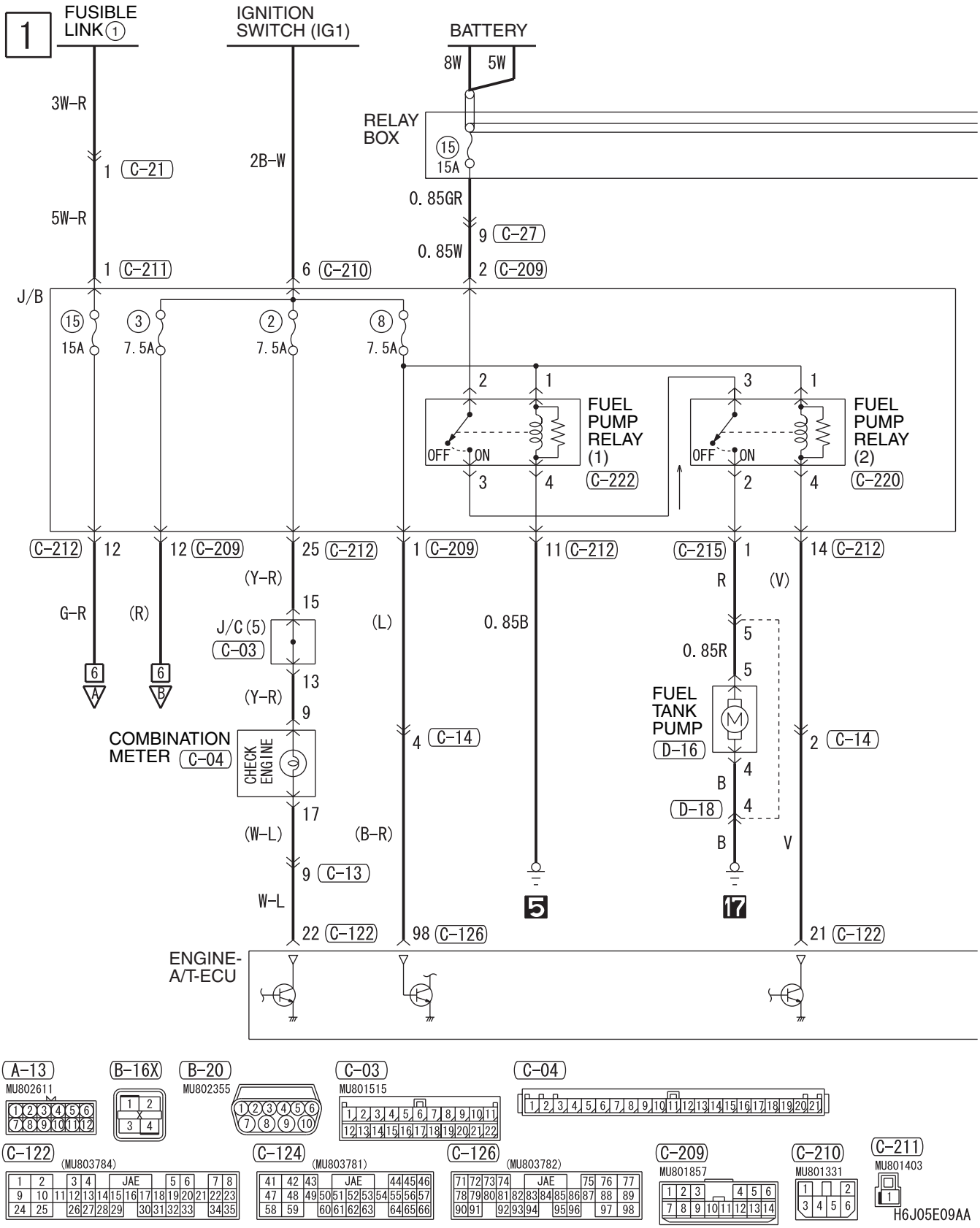

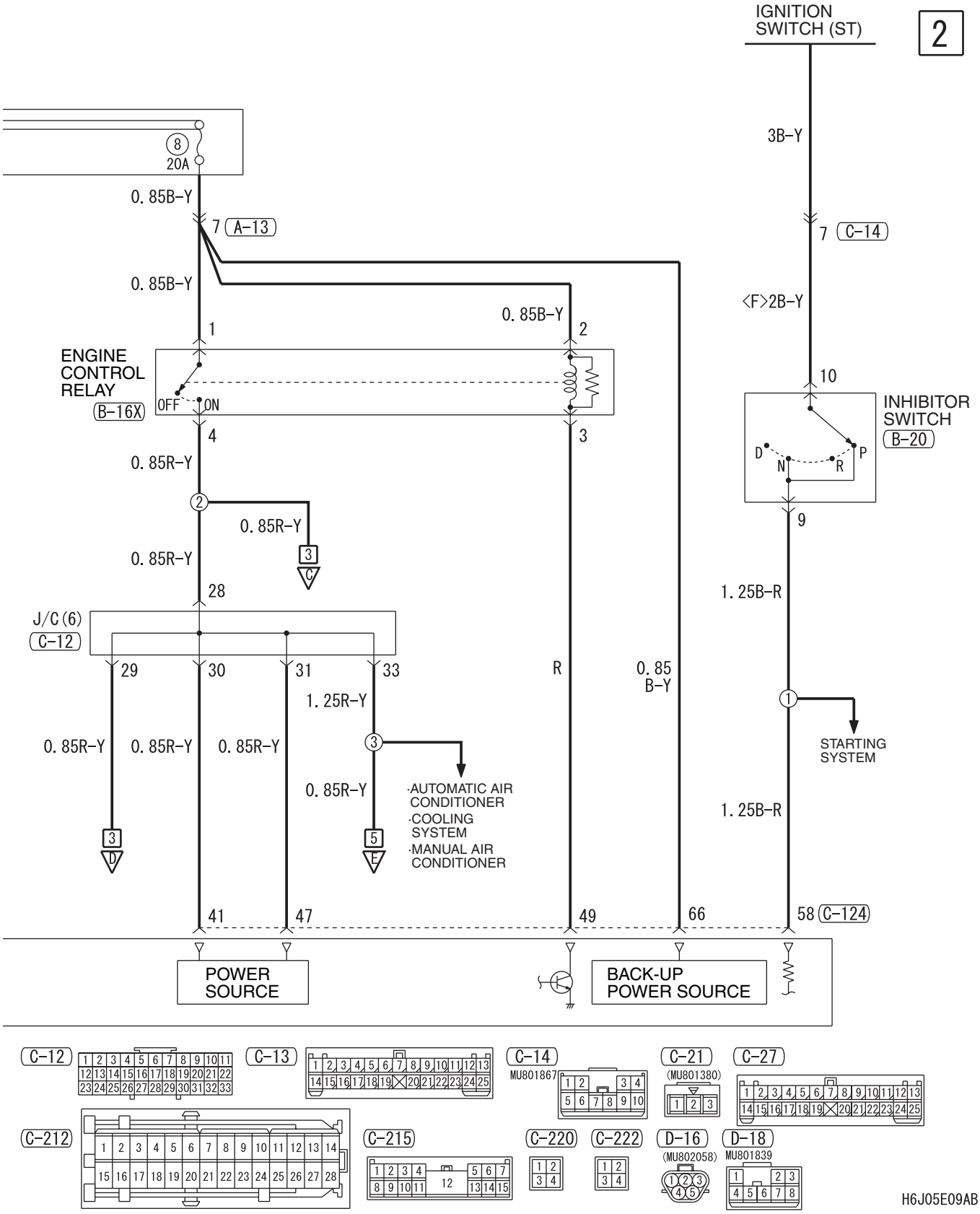
IGNITION SWITCH (ST)
2
8
20A
0.85B-Y
7 A-13
3B-Y
7 C-14
0.85B-Y
<F>2B-Y
0.85B-Y
1
2
ENGINE CONTROL RELAY
B-16X
OFF
ON
10
INHIBITOR SWITCH
B-20
D
N
R
P
4
3
0.85R-Y
9
0.85R-Y
3
C
0.85R-Y
28
1.25B-R
J/C(6)
C-12
29
30
31
33
R
0.85 B-Y
1.25R-Y
STARTING SYSTEM
0.85R-Y
0.85R-Y
0.85R-Y
0.85R-Y
·AUTOMATIC AIR CONDITIONER
·COOLING SYSTEM
·MANUAL AIR CONDITIONER
1.25B-R
3
D
5
E
41
47
49
66
58 C-124
POWER SOURCE
BACK-UP POWER SOURCE
C-12
C-13
C-14
MU801867
C-21
(MU801380)
C-27
C-212
C-215
C-220
C-222
D-16
(MU802058)
D-18
MU801839
H6J05E09AB

ENGINE CONTROL SYSTEM <4G6-A/T (LHD)> (CONTINUED)

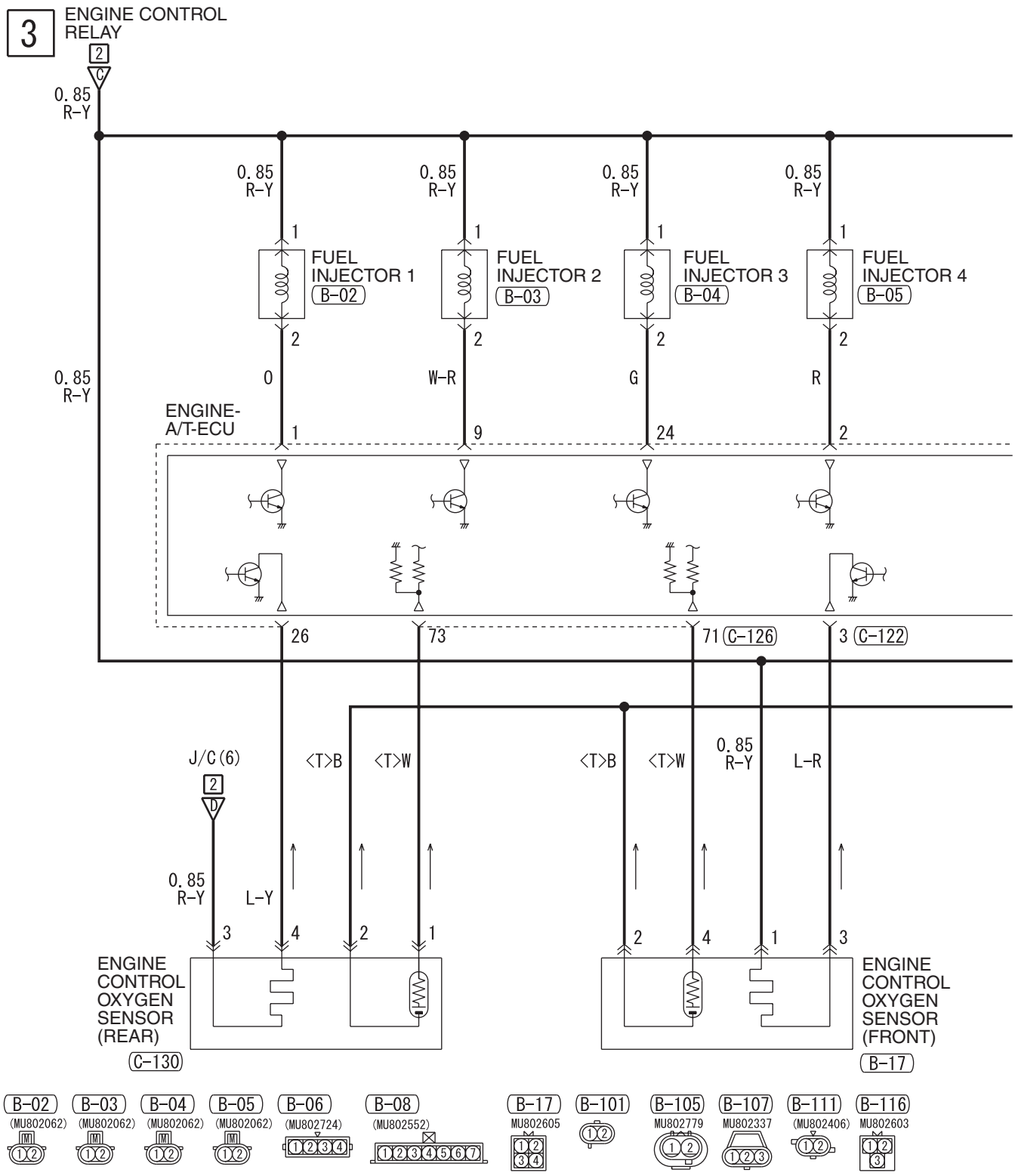

H6J05E09BA

4

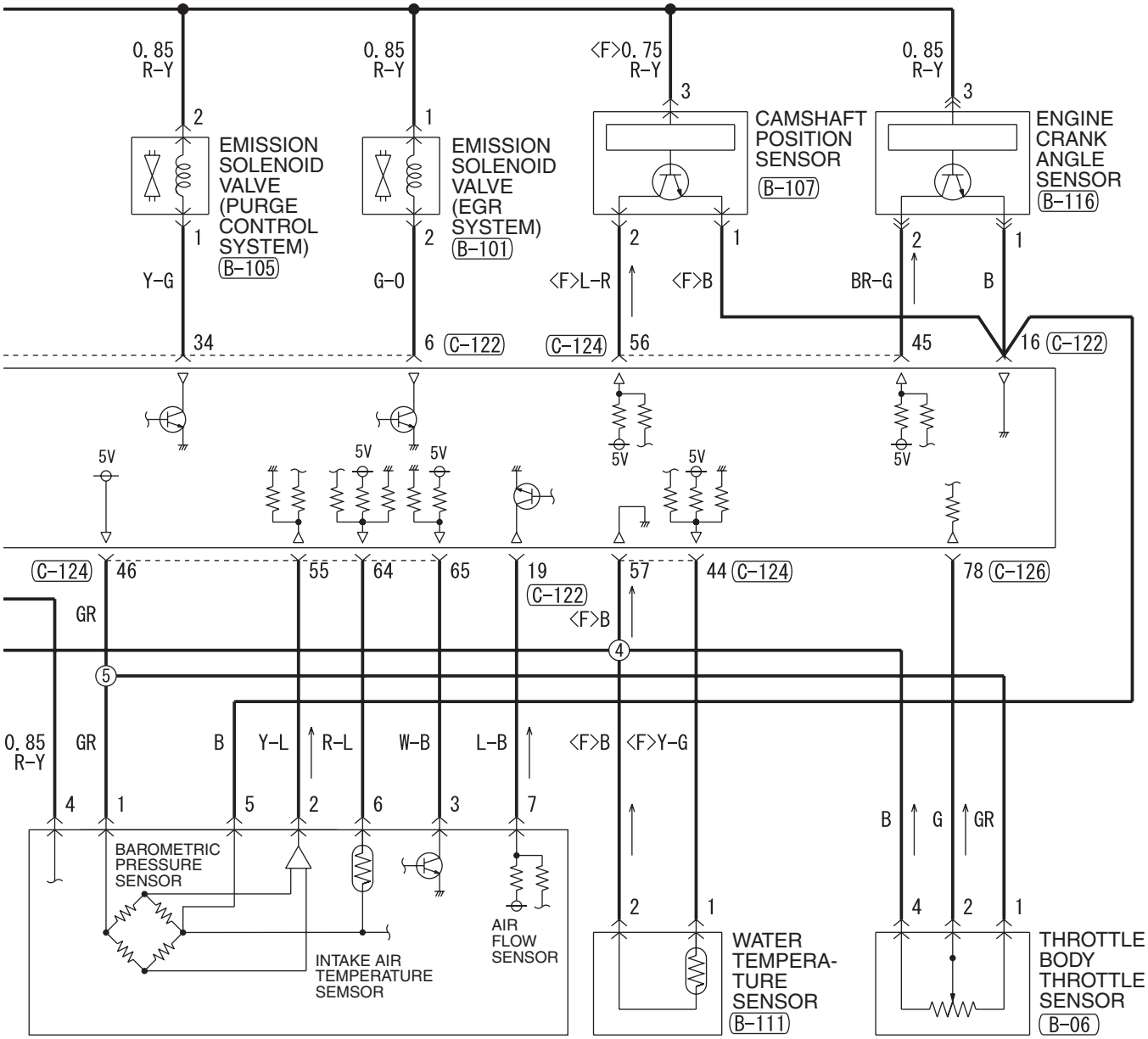

C-122 (MU803784)

1	2		3	4				JAE			5	6		7	8								
9	10	11	12	13	14	15	16	17	18	19	20	21	22	23									
24	25		26	27	28	29		30	31	32	33		34	35									

C-124 (MU803781)

41	42	43				JAE			44	45	46			
47	48	49	50	51	52	53	54	55	56	57				
58	59		60	61	62	63		64	65	66				

C-126 (MU803782)

71	72	73	74			JAE			75	76	77			
78	79	80	81	82	83	84	85	86	87	88	89			
90	91		92	93	94		95	96		97	98			

C-130 MU801446

1	2	3	4

Wire colour code
B : Black LG : Light green G : Green L : Blue W : White Y : Yellow SB : Sky blue
BR : Brown O : Orange GR : Grey R : Red P : Pink V : Violet PU : Purple

H6J05E09BB

ENGINE CONTROL SYSTEM <4G6-A/T (LHD)> (CONTINUED)

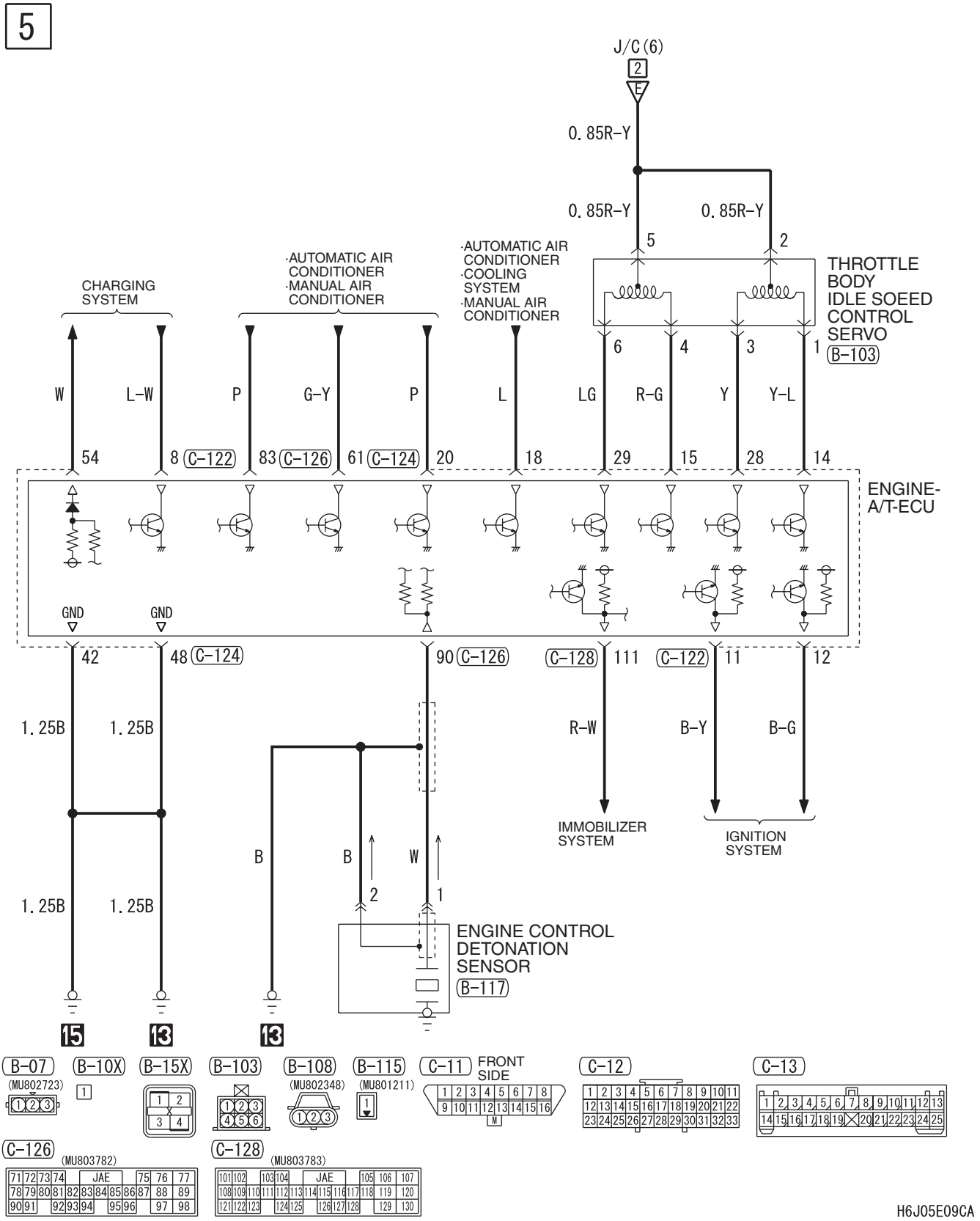

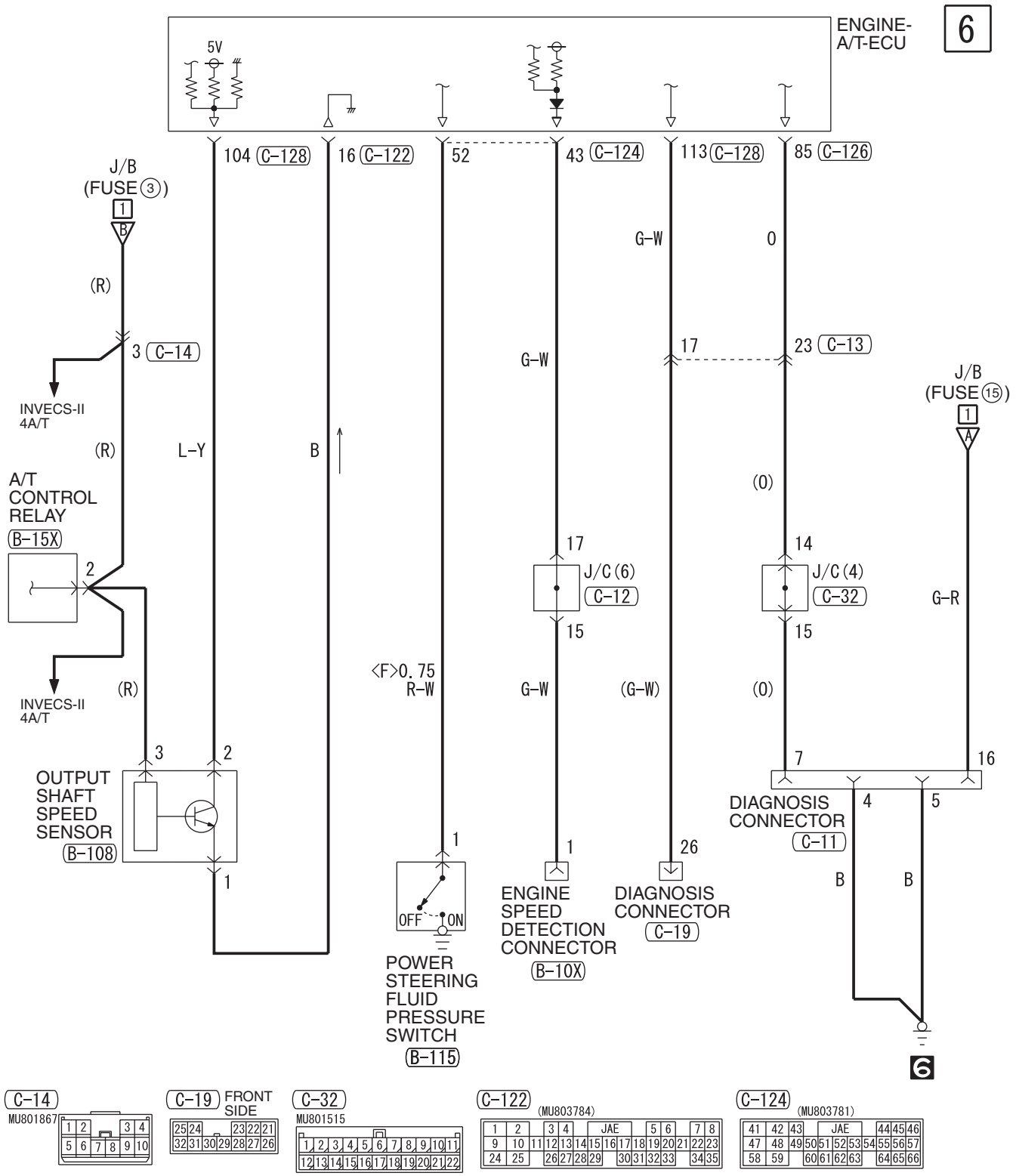
ENGINE-
A/T-ECU
6
5V
104 C-128
16 C-122
52
43 C-124
113 C-128
85 C-126
J/B
(FUSE 3)
1
B
(R)
3 C-14
INVECS-II
4A/T
(R)
L-Y
B
A/T
CONTROL
RELAY
B-15X
2
INVECS-II
4A/T
(R)
3
2
OUTPUT
SHAFT
SPEED
SENSOR
B-108
1
G-W
0
G-W
17
23 C-13
J/B
(FUSE 15)
1
A
(0)
17
J/C (6)
C-12
15
14
J/C (4)
C-32
15
G-R
<F>0.75
R-W
G-W
(G-W)
(0)
7
16
DIAGNOSIS
CONNECTOR
C-11
4
5
1
OFF
ON
POWER
STEERING
FLUID
PRESSURE
SWITCH
B-115
1
ENGINE
SPEED
DETECTION
CONNECTOR
B-10X
26
DIAGNOSIS
CONNECTOR
C-19
B
B
6
C-14
MU801867
C-19
FRONT
SIDE
C-32
MU801515
C-122
(MU803784)
C-124
(MU803781)
JAE

H6J05E09CB

COOLING SYSTEM

COOLING SYSTEM <LHD>

M1901001001714

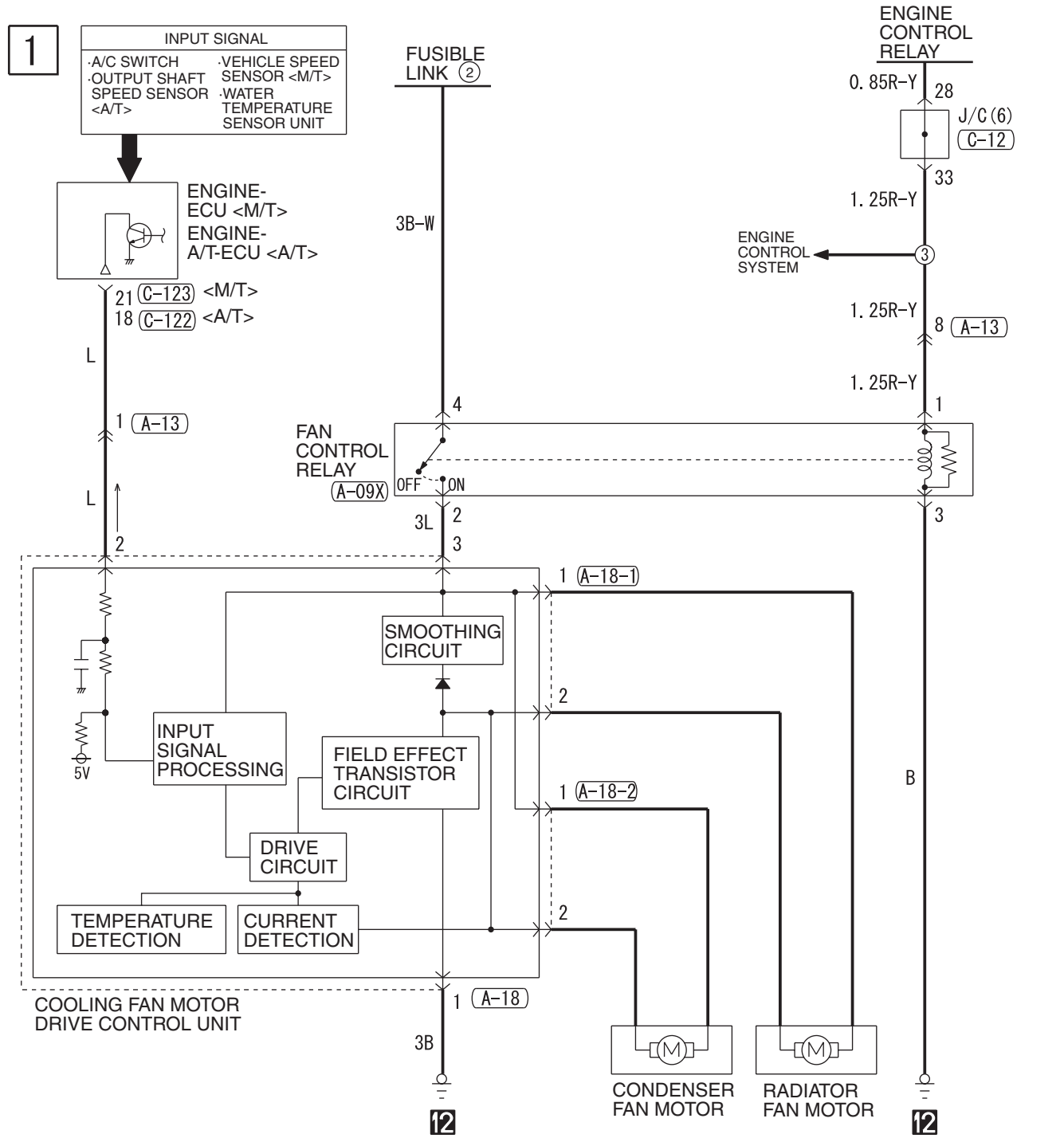

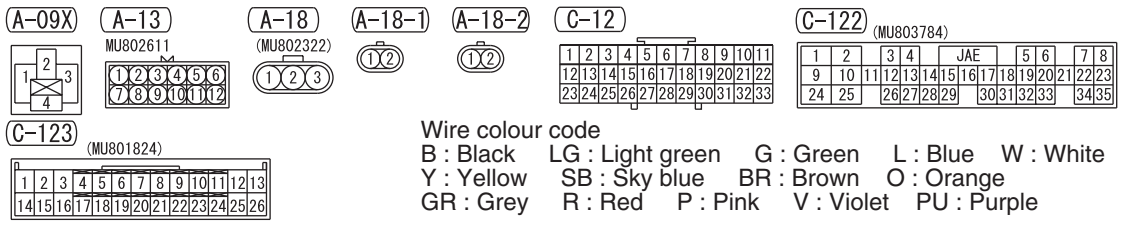

Wire colour code
B : Black LG : Light green G : Green L : Blue W : White
Y : Yellow SB : Sky blue BR : Brown O : Orange
GR : Grey R : Red P : Pink V : Violet PU : Purple

H6J06E03AA

COOLING SYSTEM <RHD>

M1901001001725

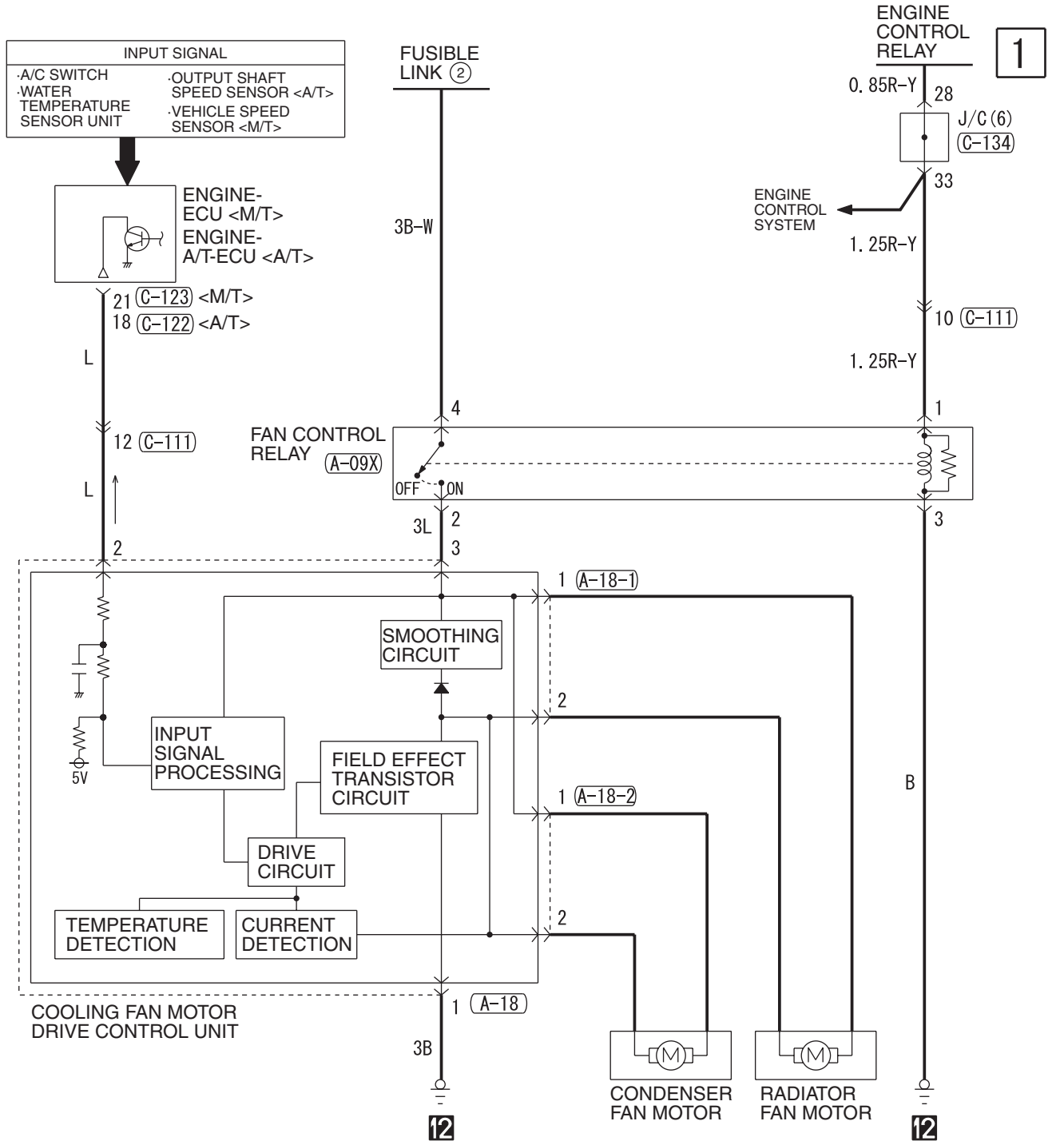

Wire colour code
B : Black LG : Light green G : Green L : Blue W : White
Y : Yellow SB : Sky blue BR : Brown O : Orange
GR : Grey R : Red P : Pink V : Violet PU : Purple

H6J06E04AA

INVECS-II 4A/T

INVECS-II 4A/T <4G1 (LHD)>

M1901016201963

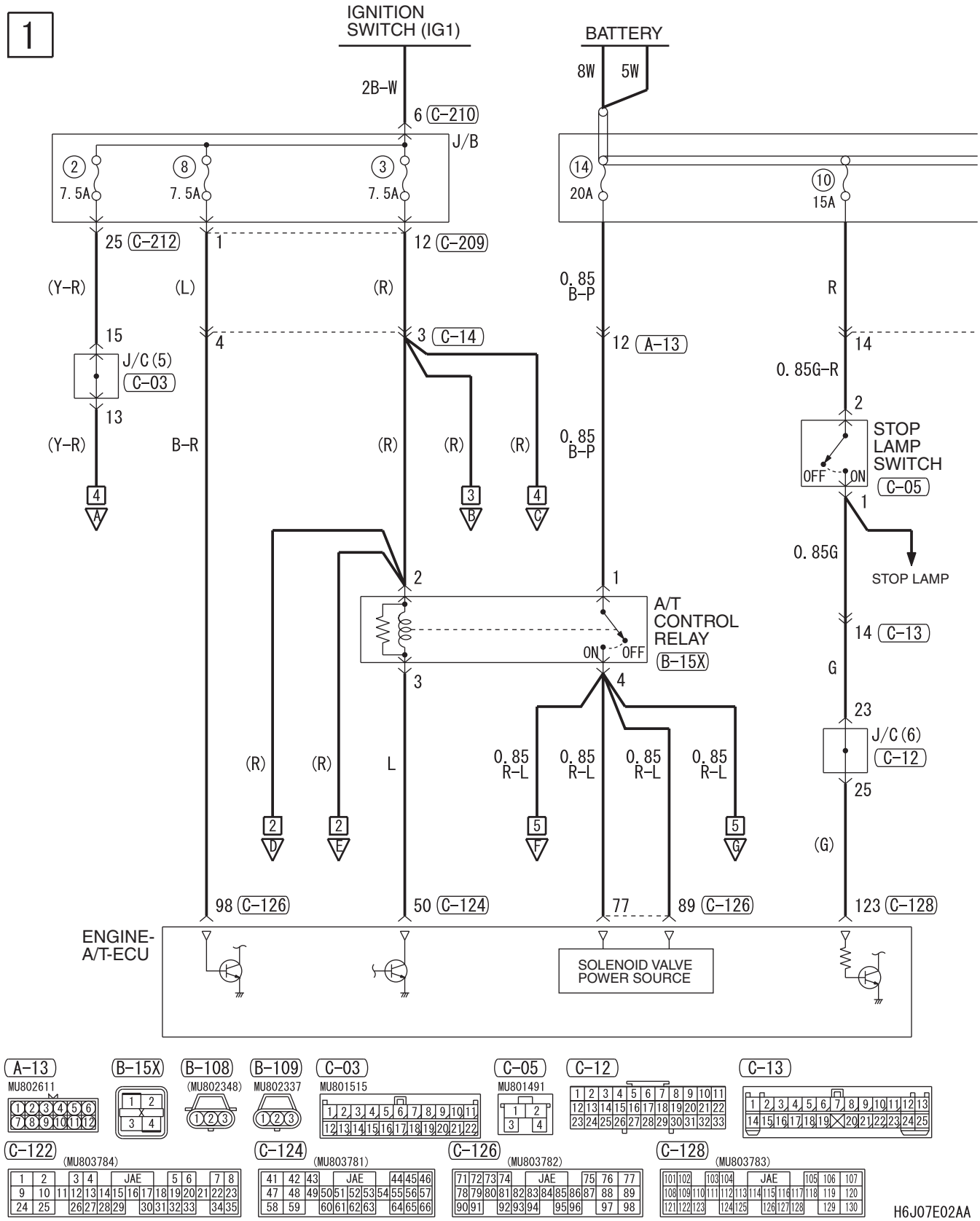

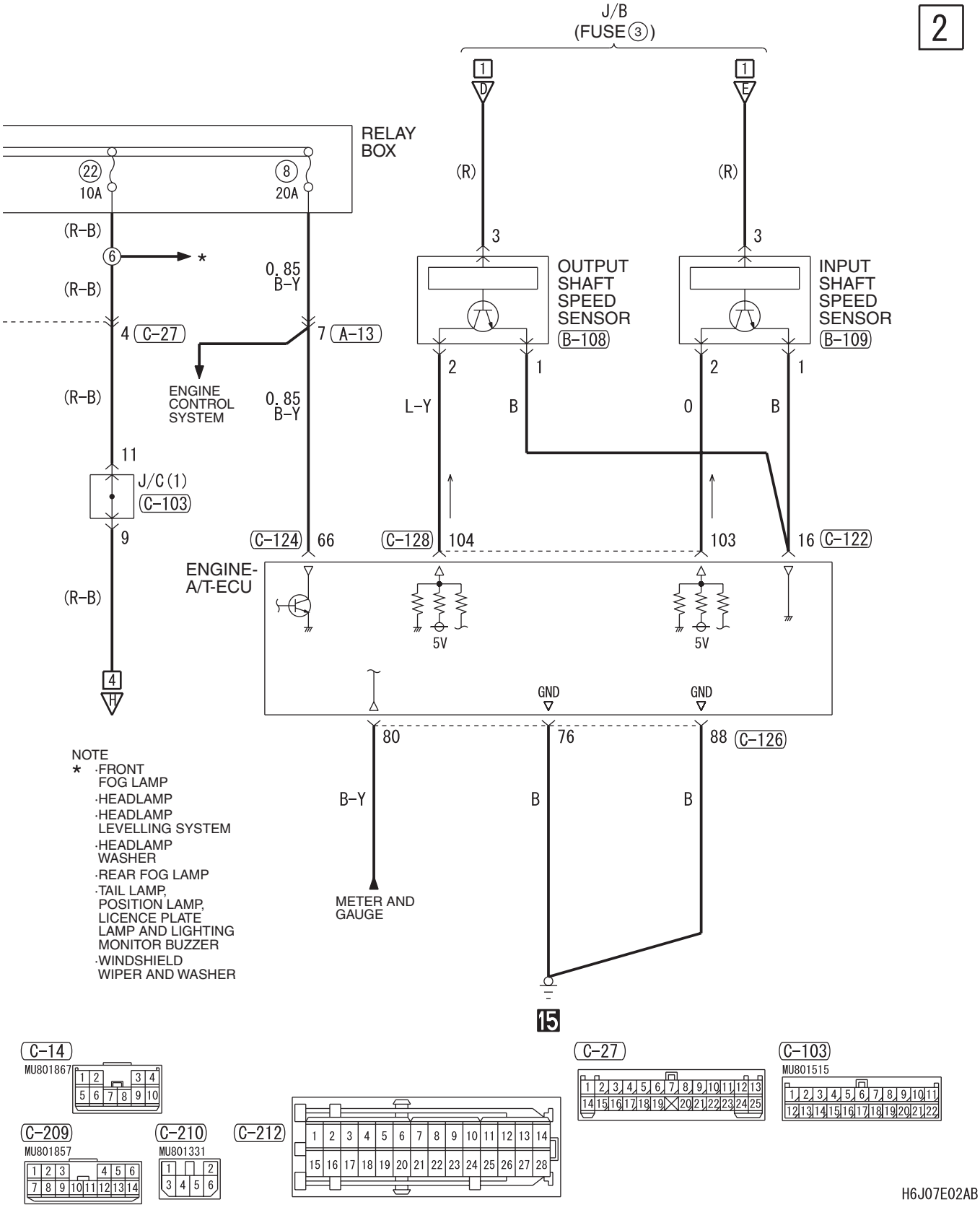
2
J/B
(FUSE③)
RELAY BOX
22
10A
8
20A
(R-B)
6
*
0.85
B-Y
4 C-27
7 A-13
ENGINE CONTROL SYSTEM
11
J/C(1)
C-103
9
4
H
(R)
3
OUTPUT SHAFT SPEED SENSOR
B-108
INPUT SHAFT SPEED SENSOR
B-109
2
1
L-Y
B
0
C-124 66
C-128 104
103
16 C-122
ENGINE-A/T-ECU
5V
GND
80
76
88 C-126
B-Y
METER AND GAUGE
15
NOTE
* ·FRONT FOG LAMP
·HEADLAMP
·HEADLAMP LEVELLING SYSTEM
·HEADLAMP WASHER
·REAR FOG LAMP
·TAIL LAMP, POSITION LAMP, LICENCE PLATE LAMP AND LIGHTING MONITOR BUZZER
·WINDSHIELD WIPER AND WASHER
C-14
MU801867
C-27
C-103
MU801515
C-209
MU801857
C-210
MU801331
C-212
H6J07E02AB

INVECS-II 4A/T <4G1 (LHD)> (CONTINUED)

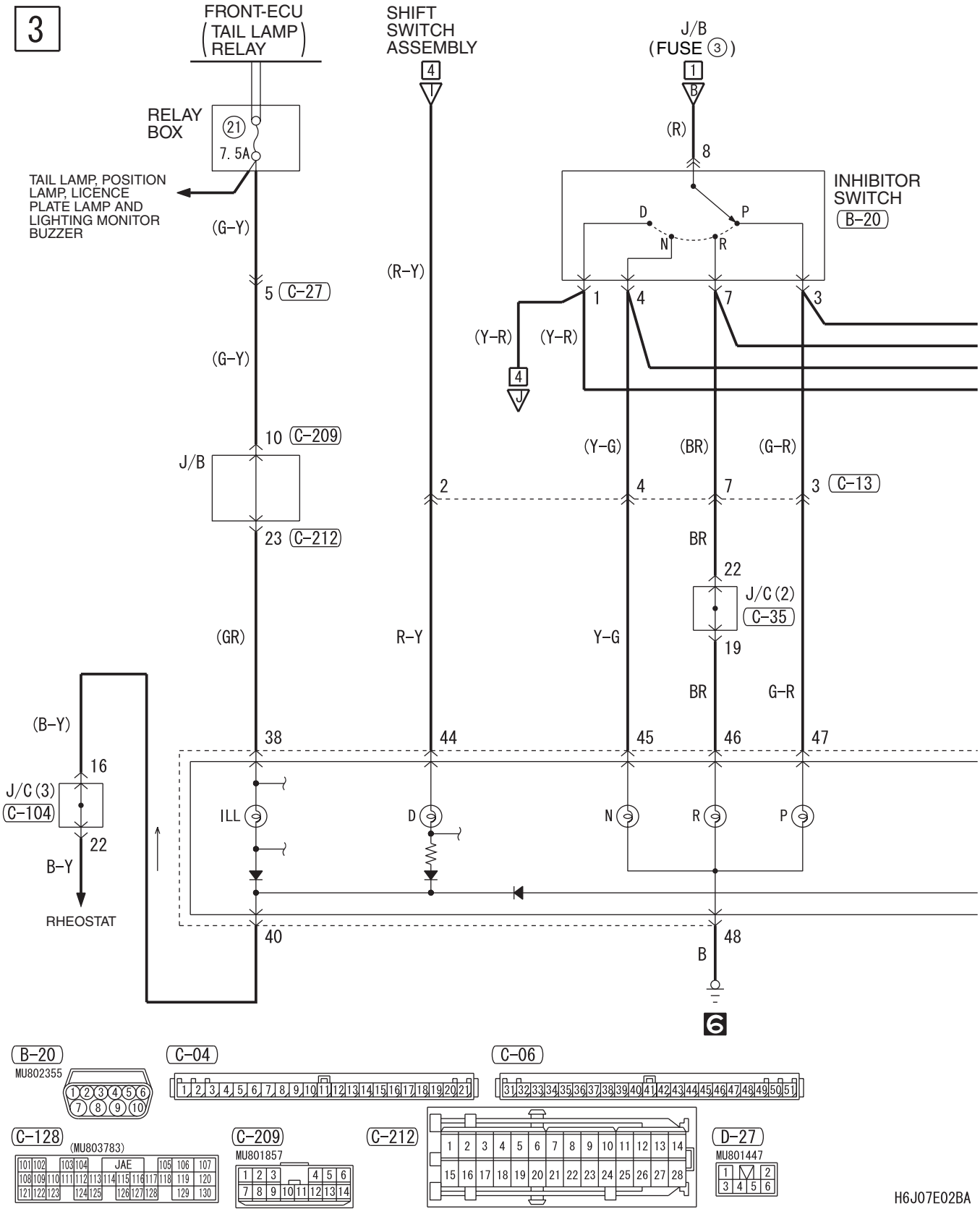

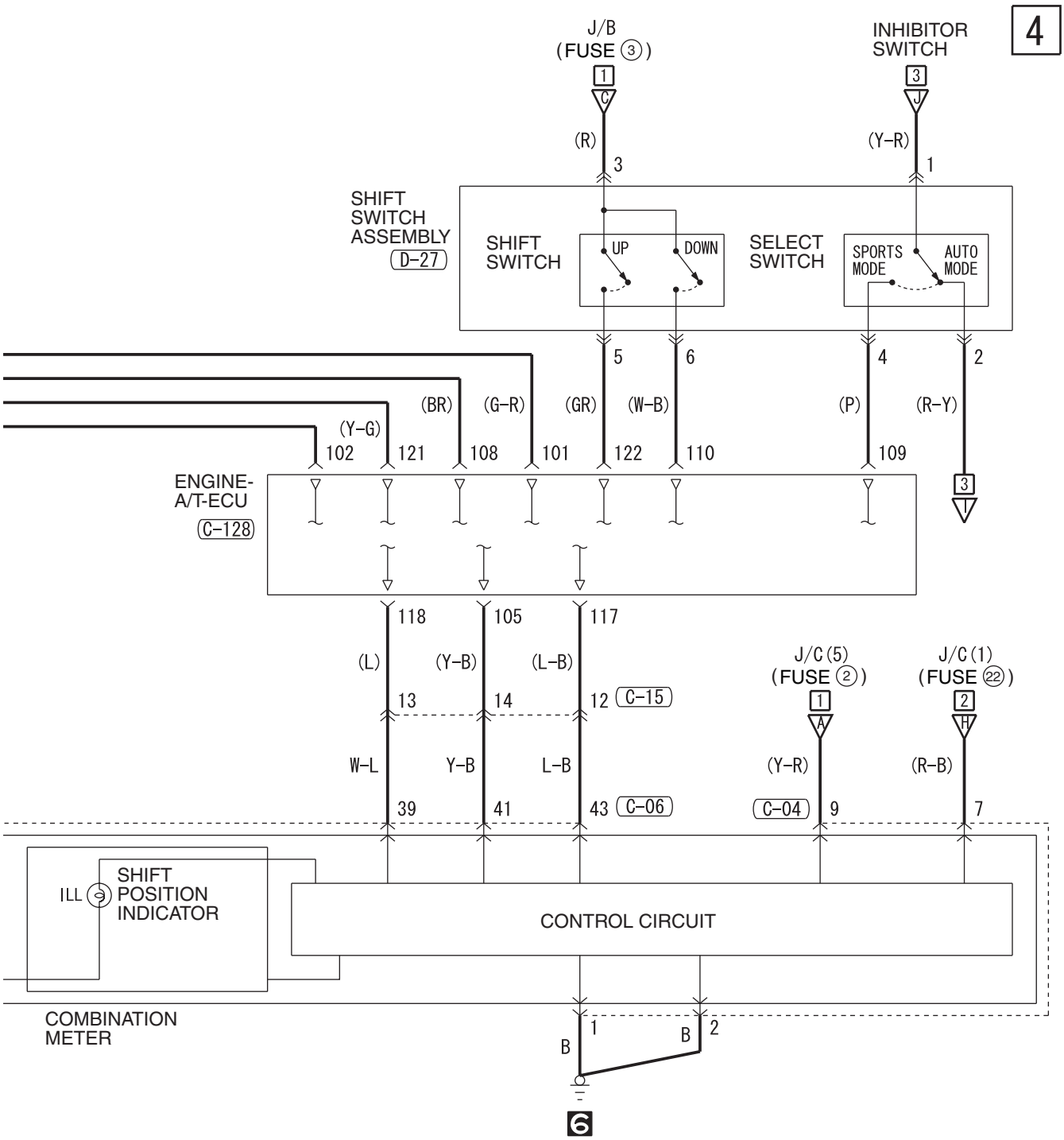

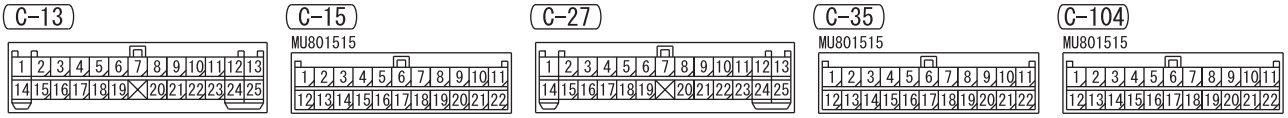

Wire colour code
B : Black LG : Light green G : Green L : Blue W : White Y : Yellow SB : Sky blue
BR : Brown O : Orange GR : Grey R : Red P : Pink V : Violet PU : Purple

H6J07E02BB

INVECS-II 4A/T <4G1 (LHD)> (CONTINUED)

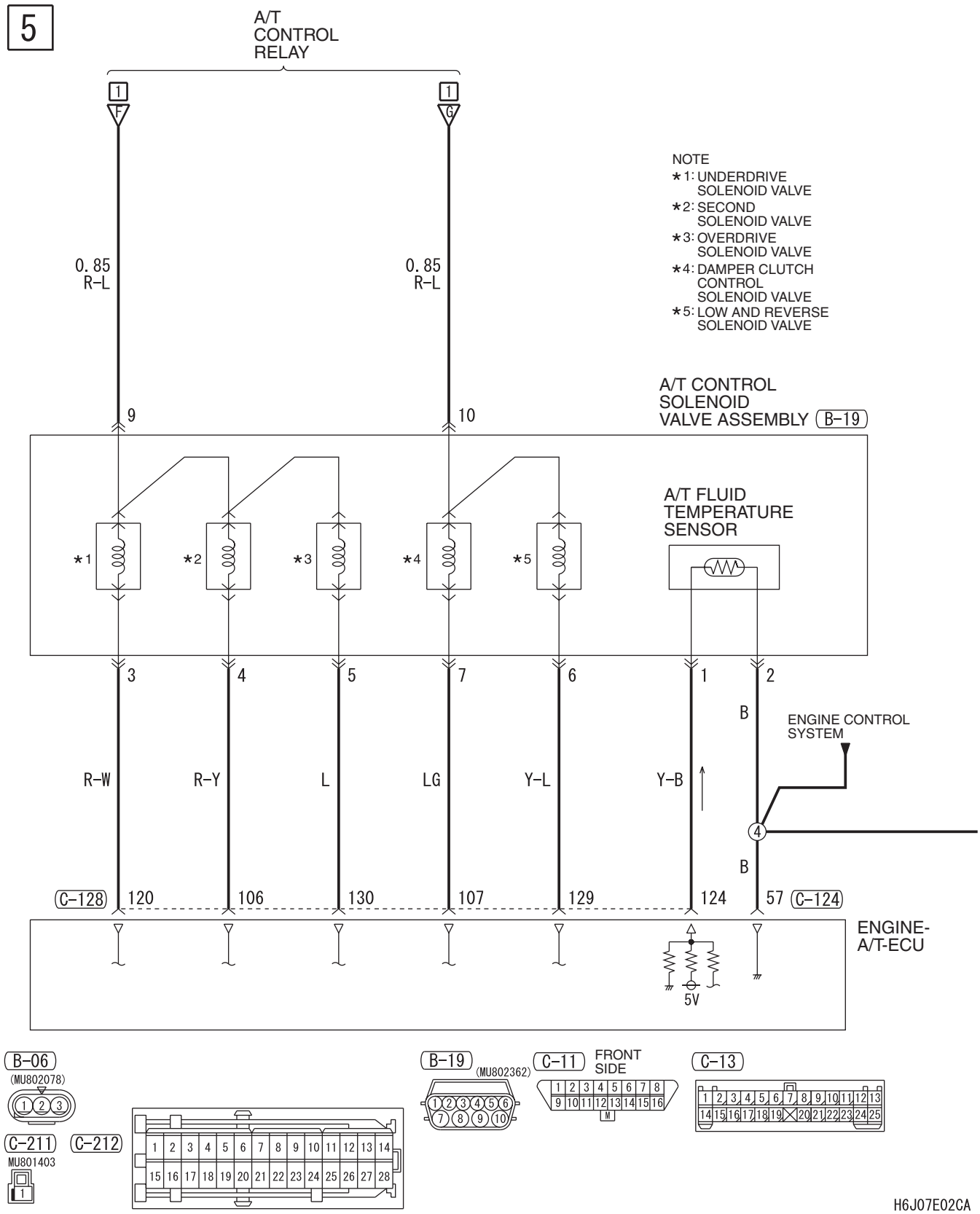

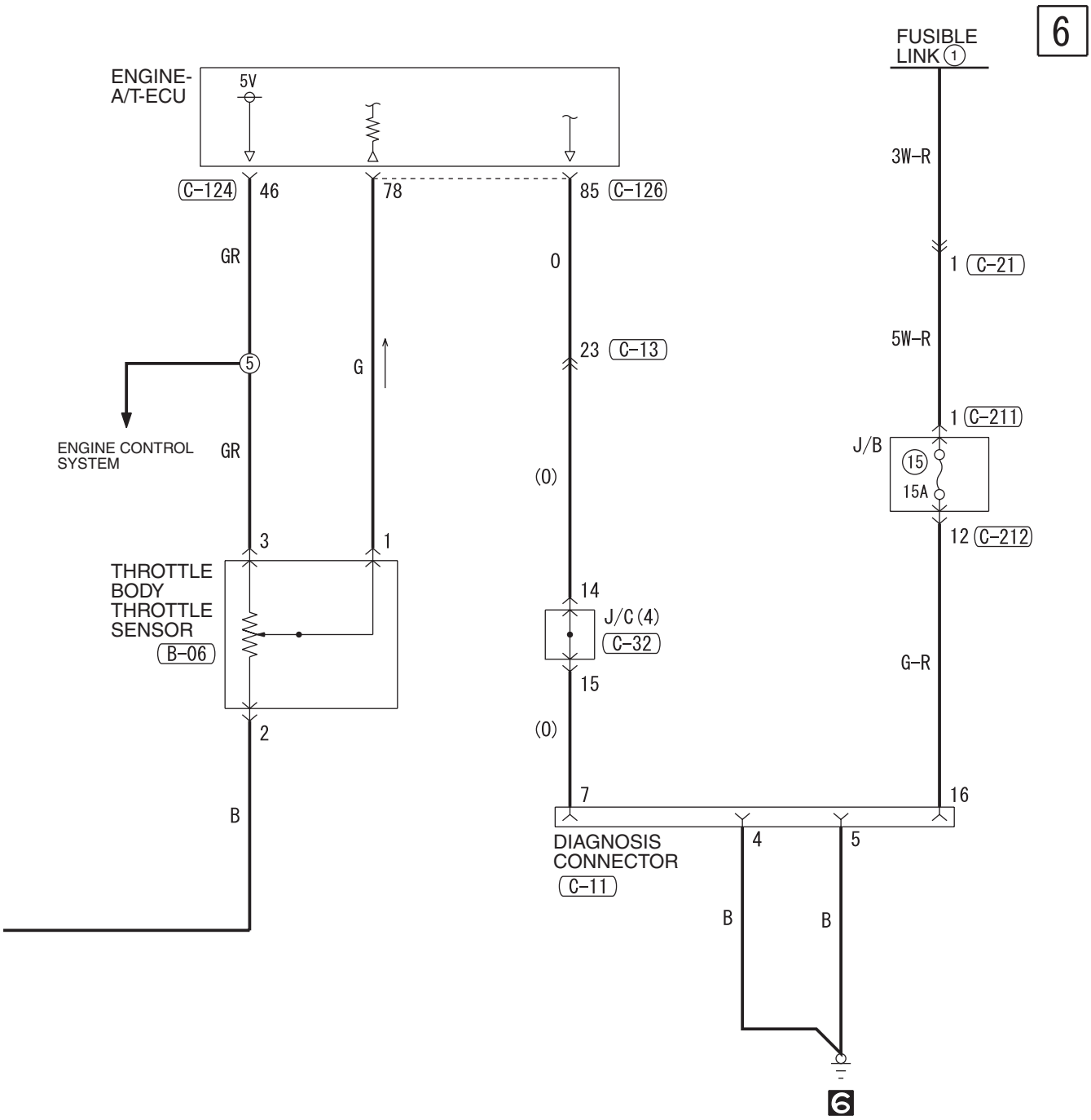

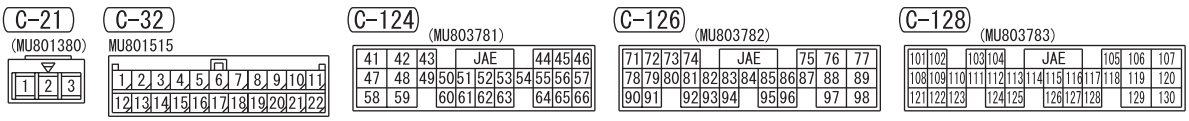

Wire colour code
B : Black LG : Light green G : Green L : Blue W : White Y : Yellow SB : Sky blue
BR : Brown O : Orange GR : Grey R : Red P : Pink V : Violet PU : Purple

H6J07E02CB

INVECS-II 4A/T <4G1 (RHD)>

M1901016201974

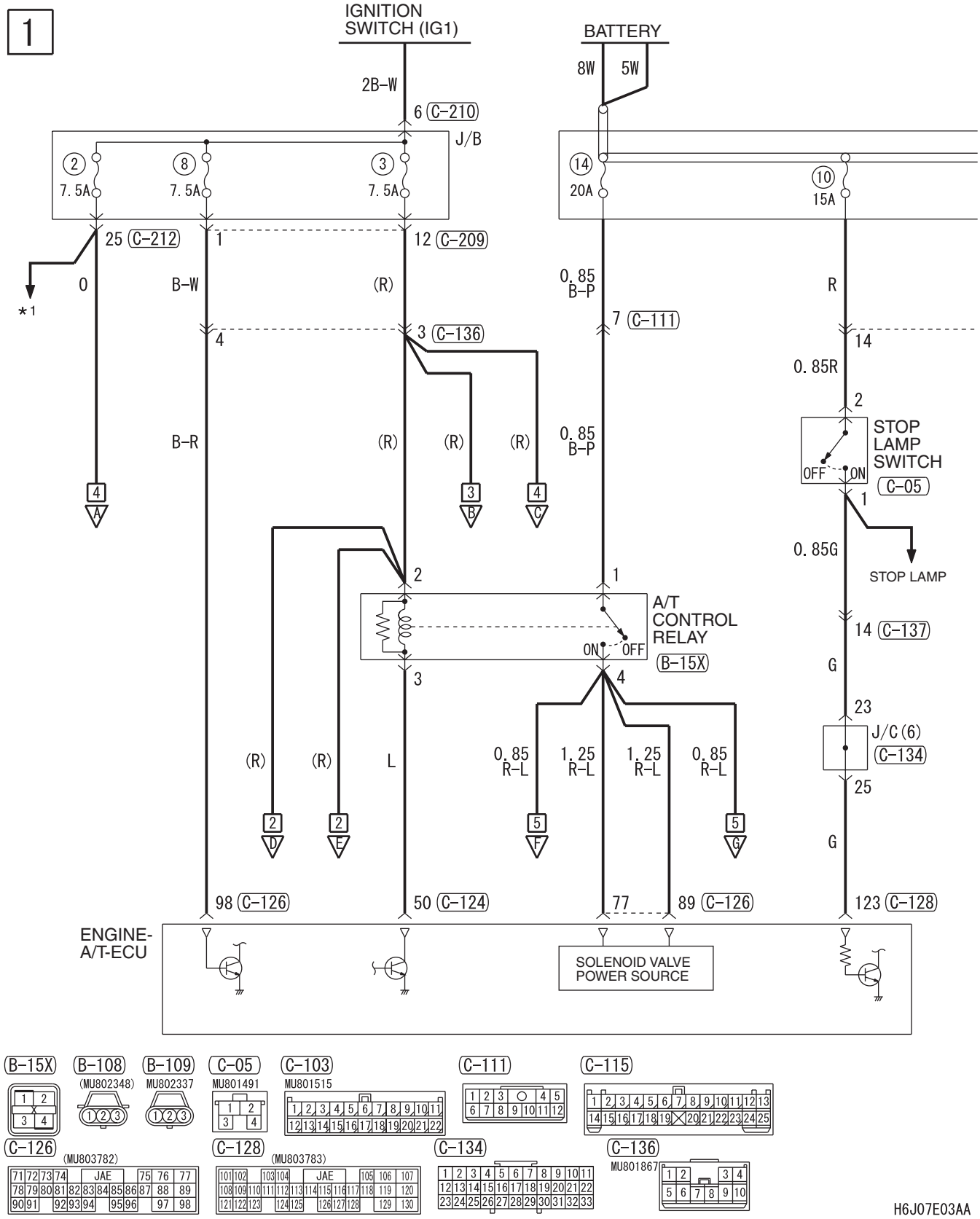

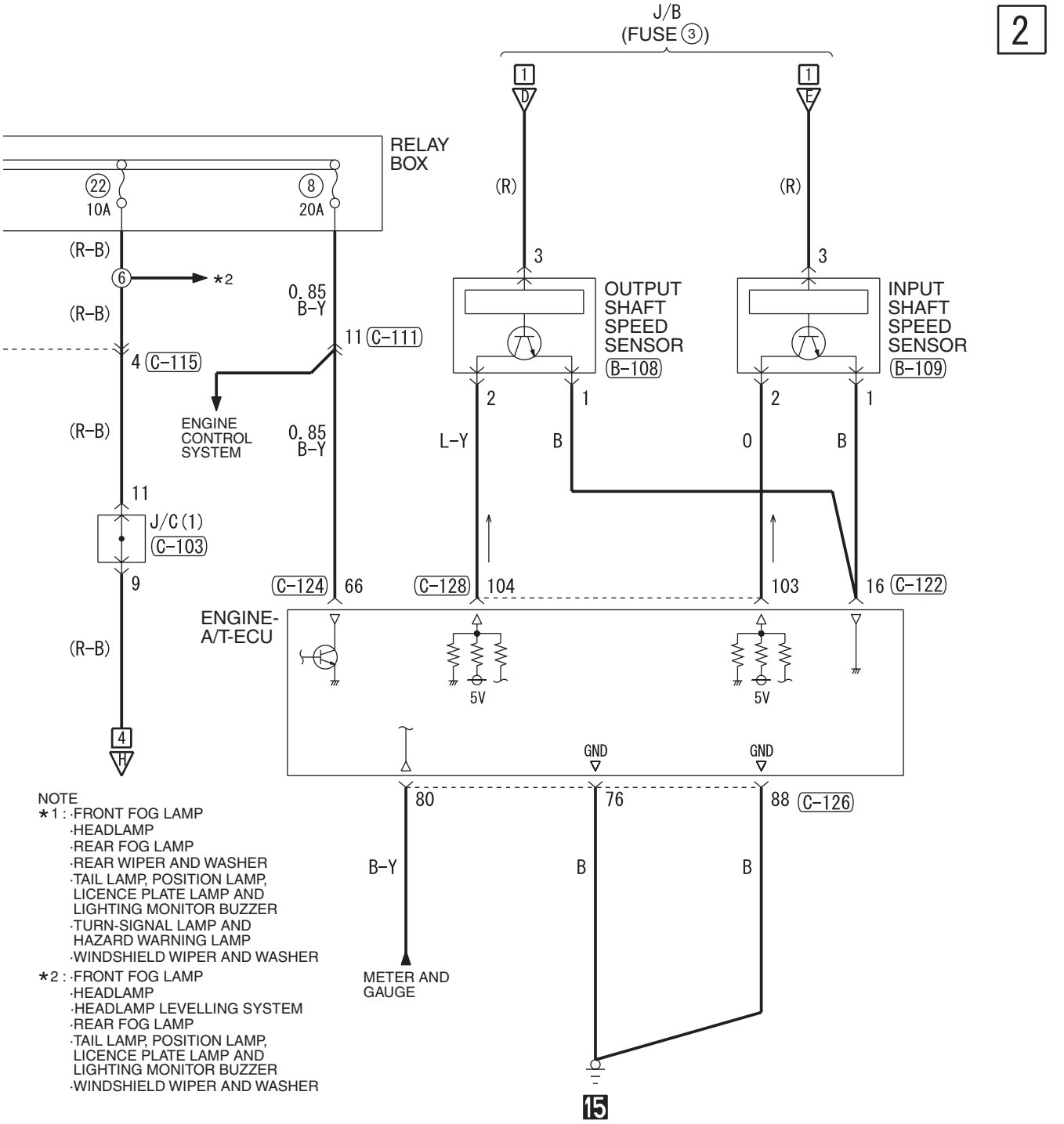

NOTE
*1 : ·FRONT FOG LAMP
·HEADLAMP
·REAR FOG LAMP
·REAR WIPER AND WASHER
·TAIL LAMP, POSITION LAMP, LICENCE PLATE LAMP AND LIGHTING MONITOR BUZZER
·TURN-SIGNAL LAMP AND HAZARD WARNING LAMP
·WINDSHIELD WIPER AND WASHER
*2 : ·FRONT FOG LAMP
·HEADLAMP
·HEADLAMP LEVELLING SYSTEM
·REAR FOG LAMP
·TAIL LAMP, POSITION LAMP, LICENCE PLATE LAMP AND LIGHTING MONITOR BUZZER
·WINDSHIELD WIPER AND WASHER

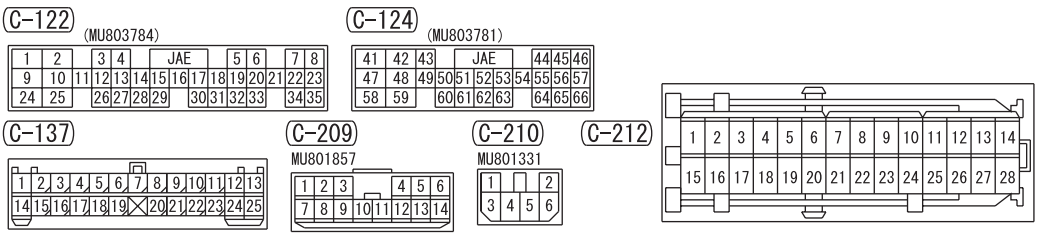

H6J07E03AB

INVECS-II 4A/T <4G1 (RHD)> (CONTINUED)

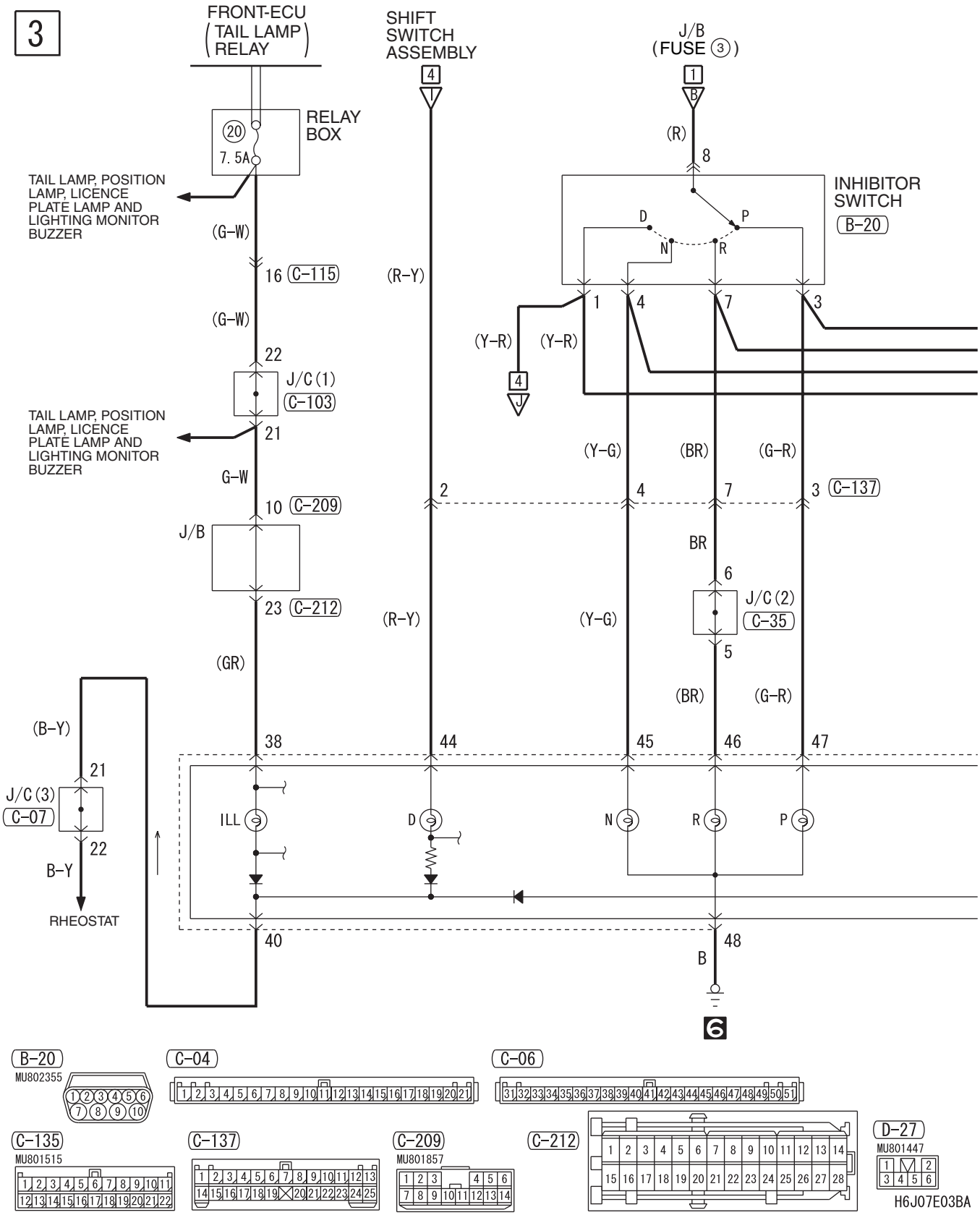

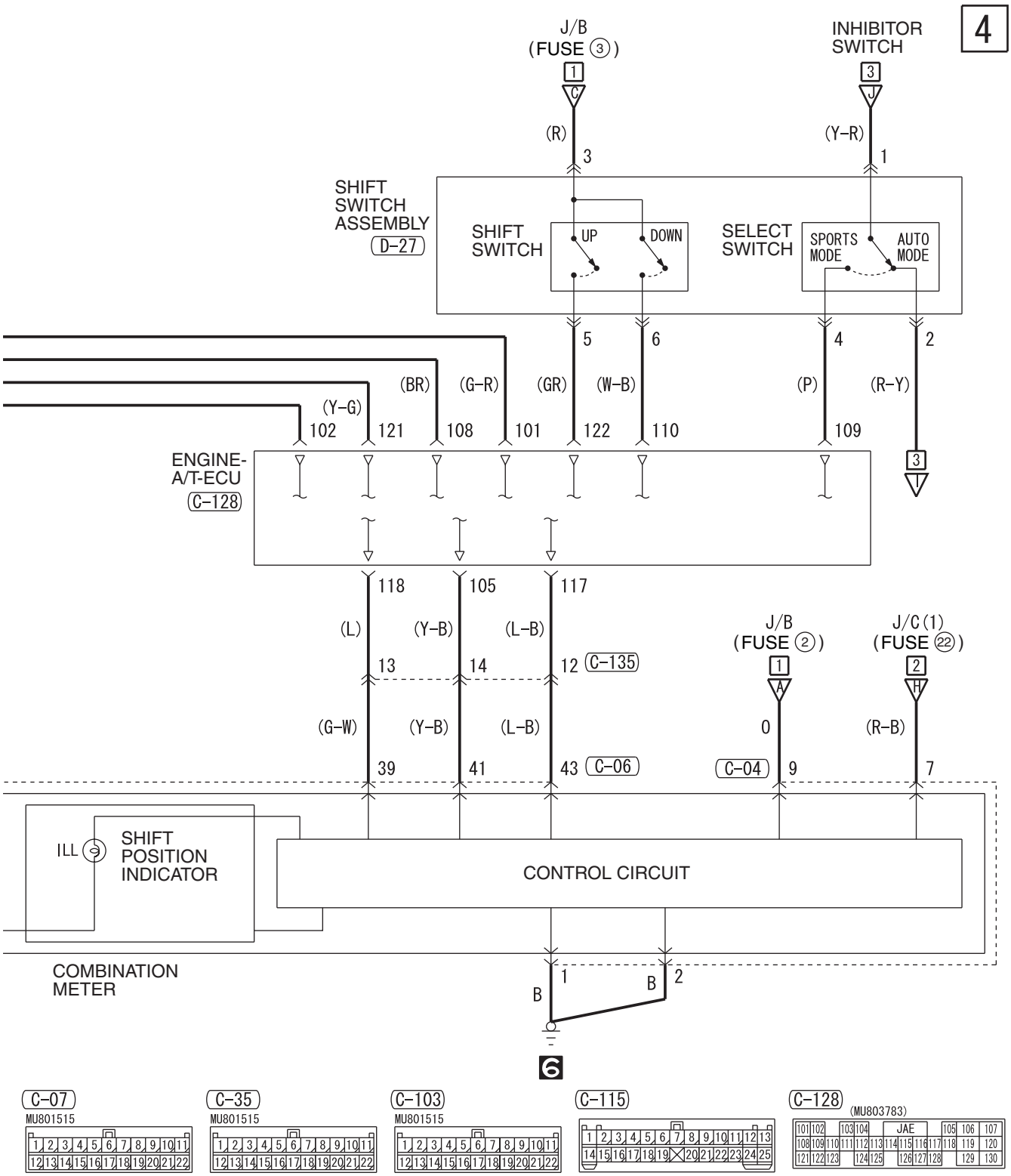

Wire colour code
B : Black LG : Light green G : Green L : Blue W : White Y : Yellow SB : Sky blue
BR : Brown O : Orange GR : Grey R : Red P : Pink V : Violet PU : Purple

H6J07E03BB

INVECS-II 4A/T <4G1 (RHD)> (CONTINUED)

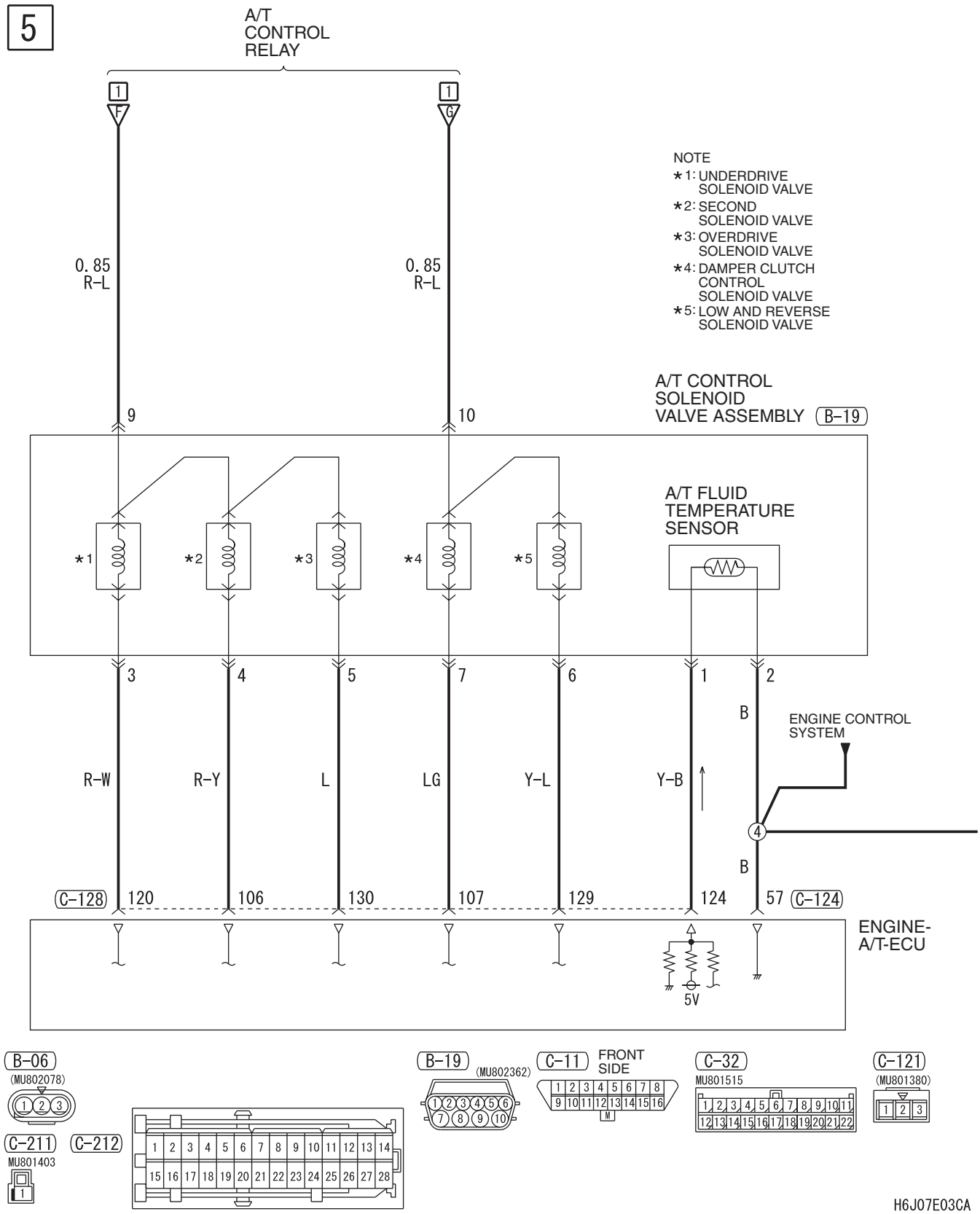

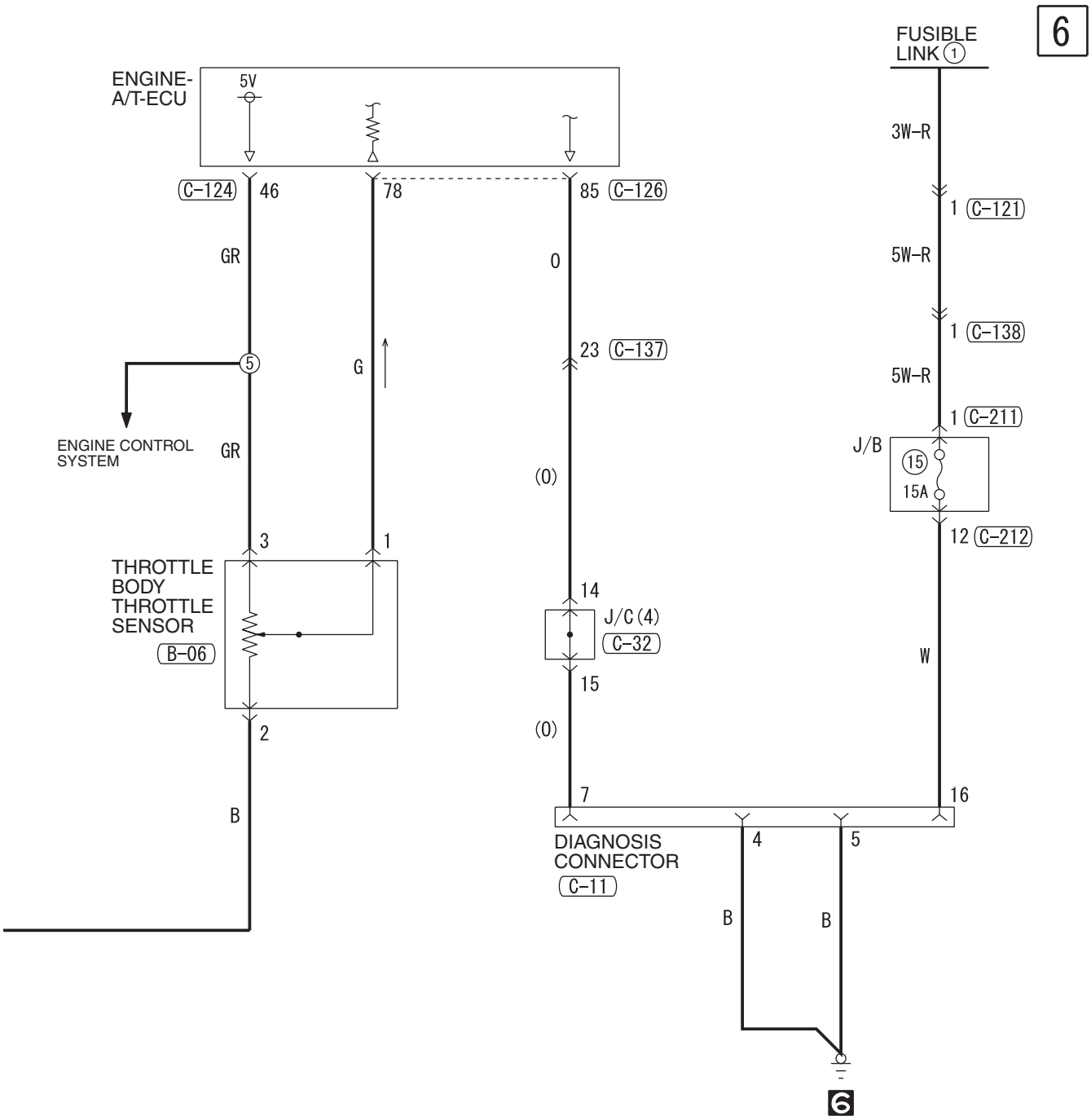

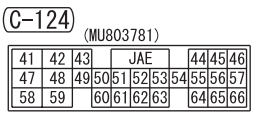

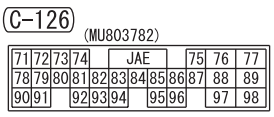

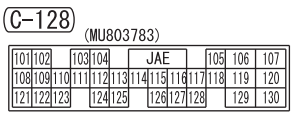

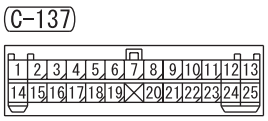

Wire colour code
B : Black LG : Light green G : Green L : Blue W : White Y : Yellow SB : Sky blue
BR : Brown O : Orange GR : Grey R : Red P : Pink V : Violet PU : Purple

H6J07E03CB

INVECS-II 4A/T <4G6 (LHD)>

M1901016201985

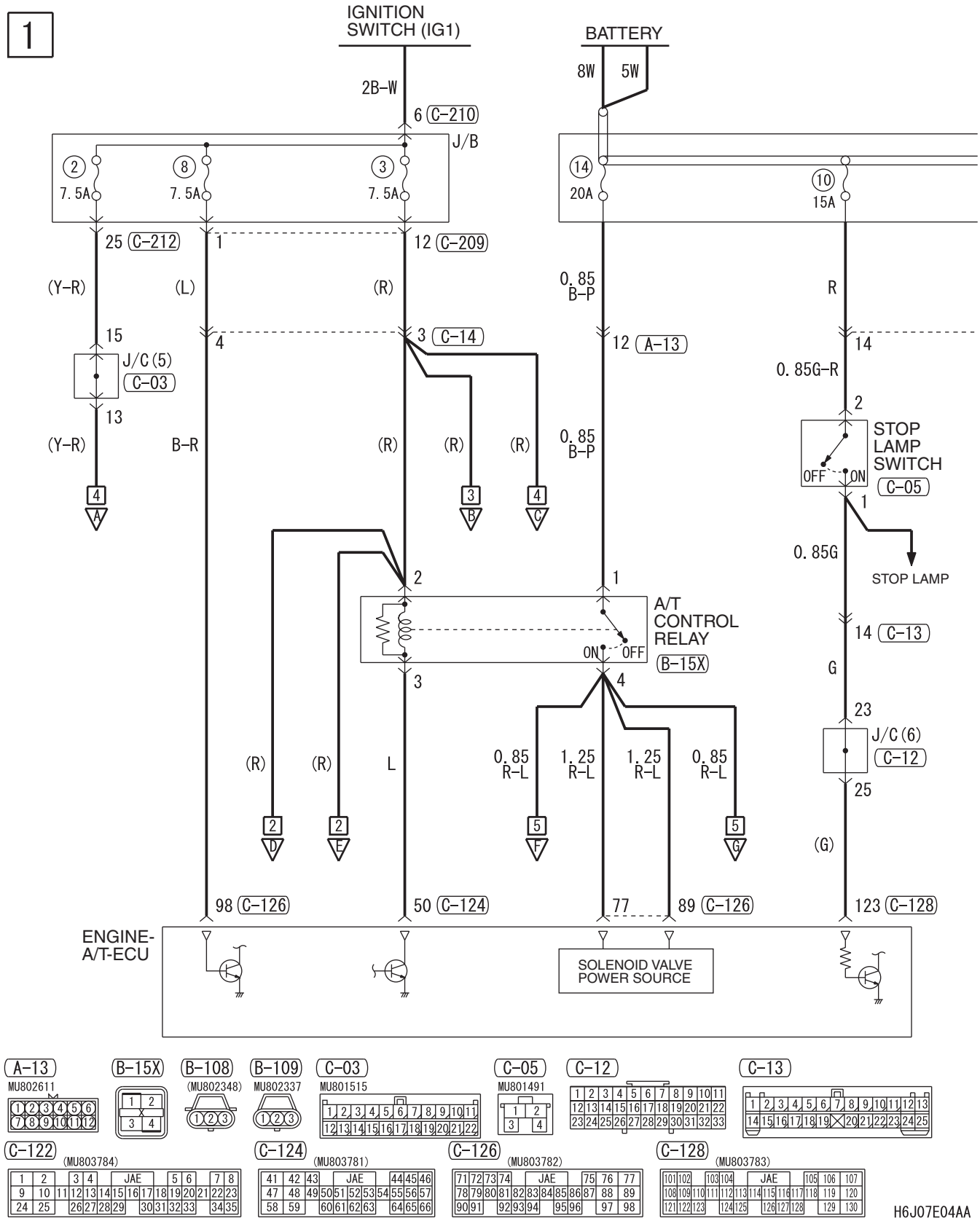

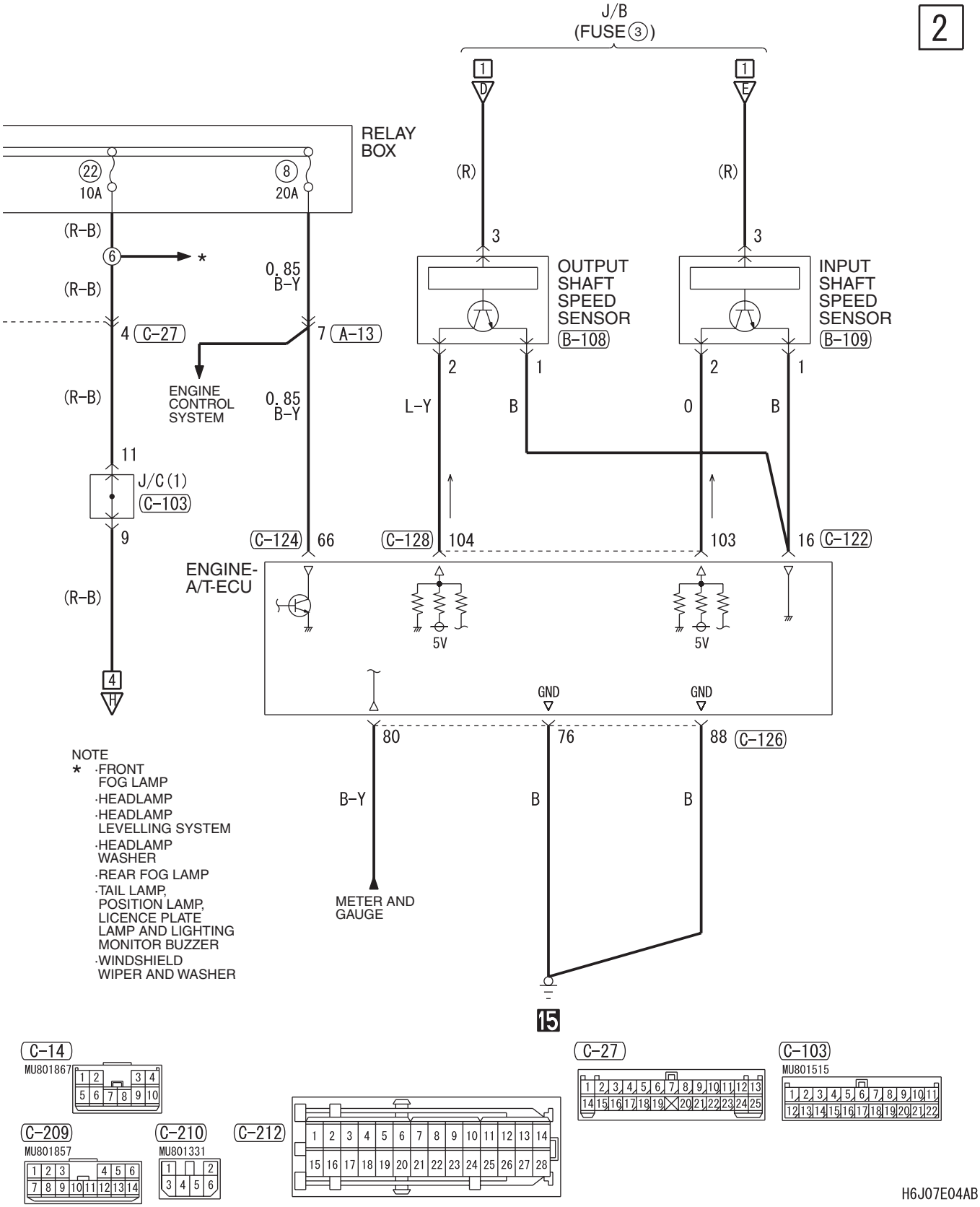
2
J/B
(FUSE③)
RELAY BOX
22
10A
8
20A
(R-B)
6
*
0.85
B-Y
4 C-27
7 A-13
ENGINE CONTROL SYSTEM
11
J/C(1)
C-103
9
4
H
(R)
3
OUTPUT SHAFT SPEED SENSOR
B-108
INPUT SHAFT SPEED SENSOR
B-109
2
1
L-Y
B
0
C-124 66
C-128 104
103
16 C-122
ENGINE-A/T-ECU
5V
GND
80
76
88 C-126
B-Y
METER AND GAUGE
15
NOTE
* ·FRONT FOG LAMP
·HEADLAMP
·HEADLAMP LEVELLING SYSTEM
·HEADLAMP WASHER
·REAR FOG LAMP
·TAIL LAMP, POSITION LAMP, LICENCE PLATE LAMP AND LIGHTING MONITOR BUZZER
·WINDSHIELD WIPER AND WASHER
C-14
MU801867
C-27
C-103
MU801515
C-209
MU801857
C-210
MU801331
C-212
H6J07E04AB

INVECS-II 4A/T <4G6 (LHD)> (CONTINUED)

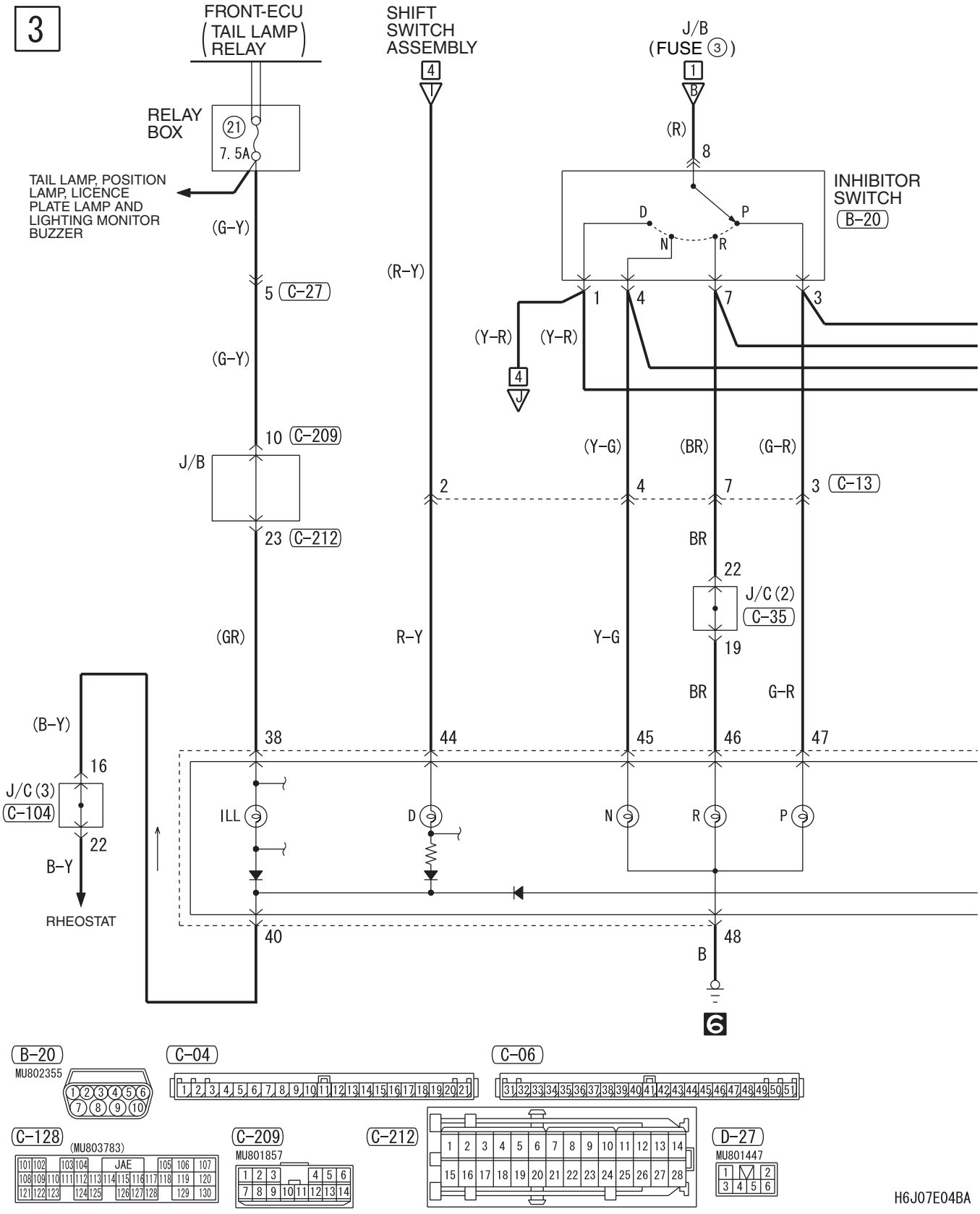

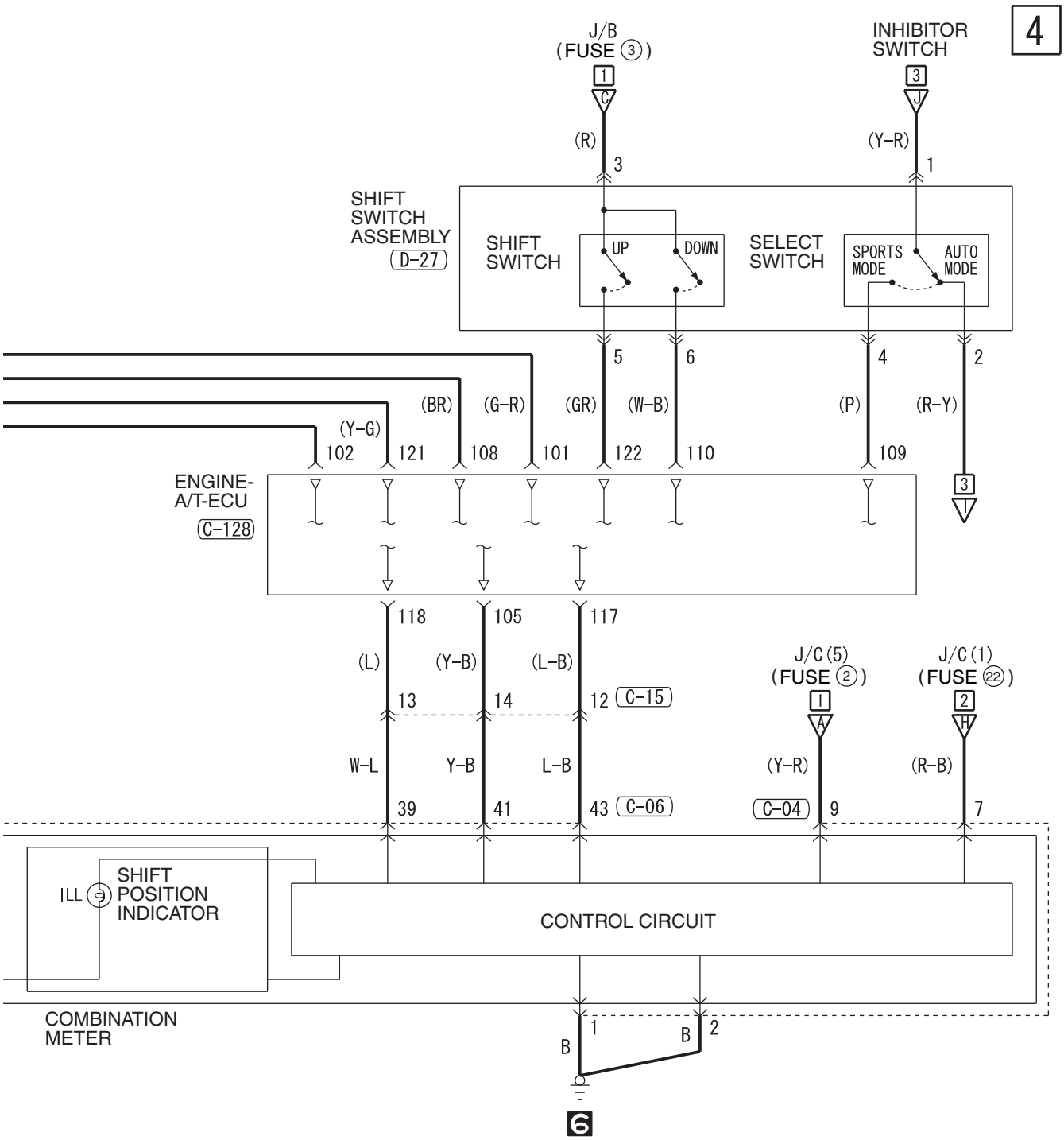

Wire colour code
B : Black LG : Light green G : Green L : Blue W : White Y : Yellow SB : Sky blue
BR : Brown O : Orange GR : Grey R : Red P : Pink V : Violet PU : Purple

H6J07E04BB

INVECS-II 4A/T <4G6 (LHD)> (CONTINUED)

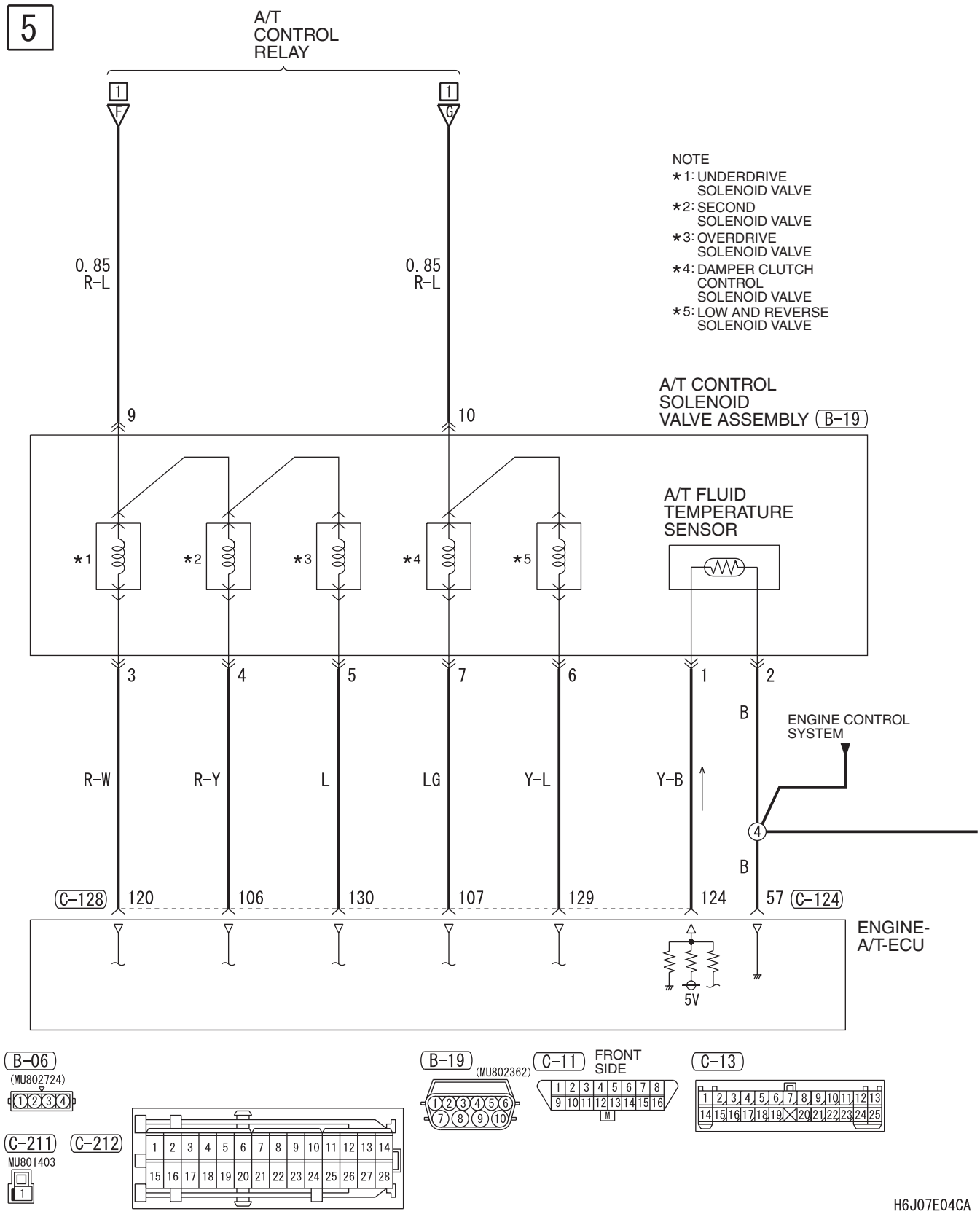

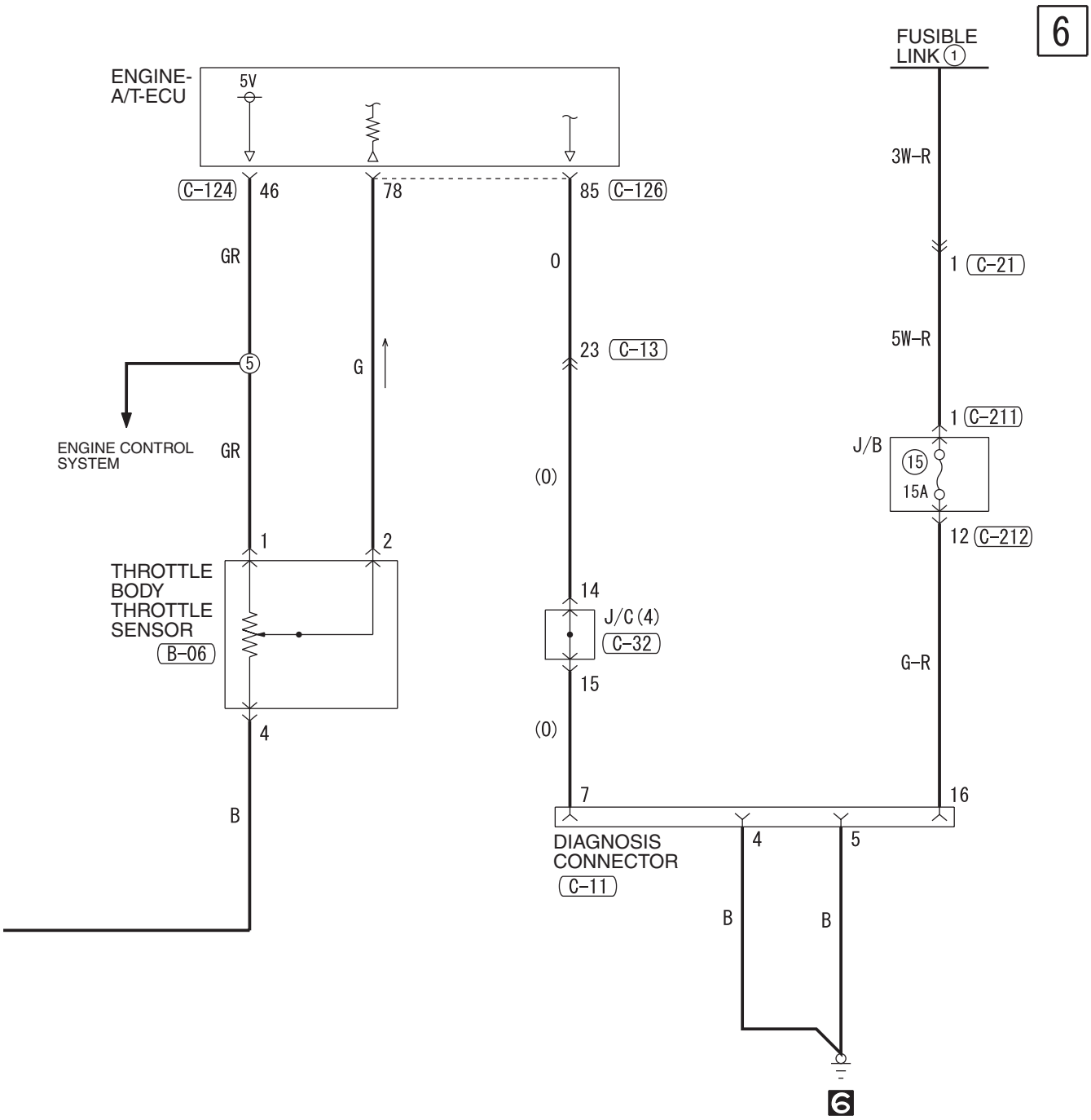

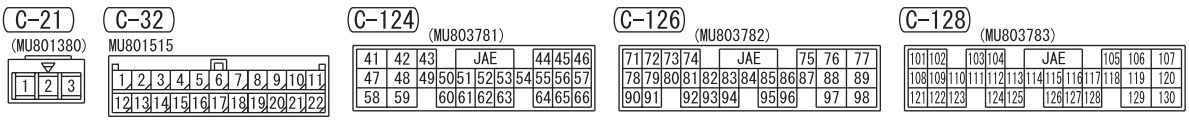

Wire colour code
B : Black LG : Light green G : Green L : Blue W : White Y : Yellow SB : Sky blue
BR : Brown O : Orange GR : Grey R : Red P : Pink V : Violet PU : Purple

H6J07E04CB

HEADLAMP

HEADLAMP <LHD>

M1901001502273

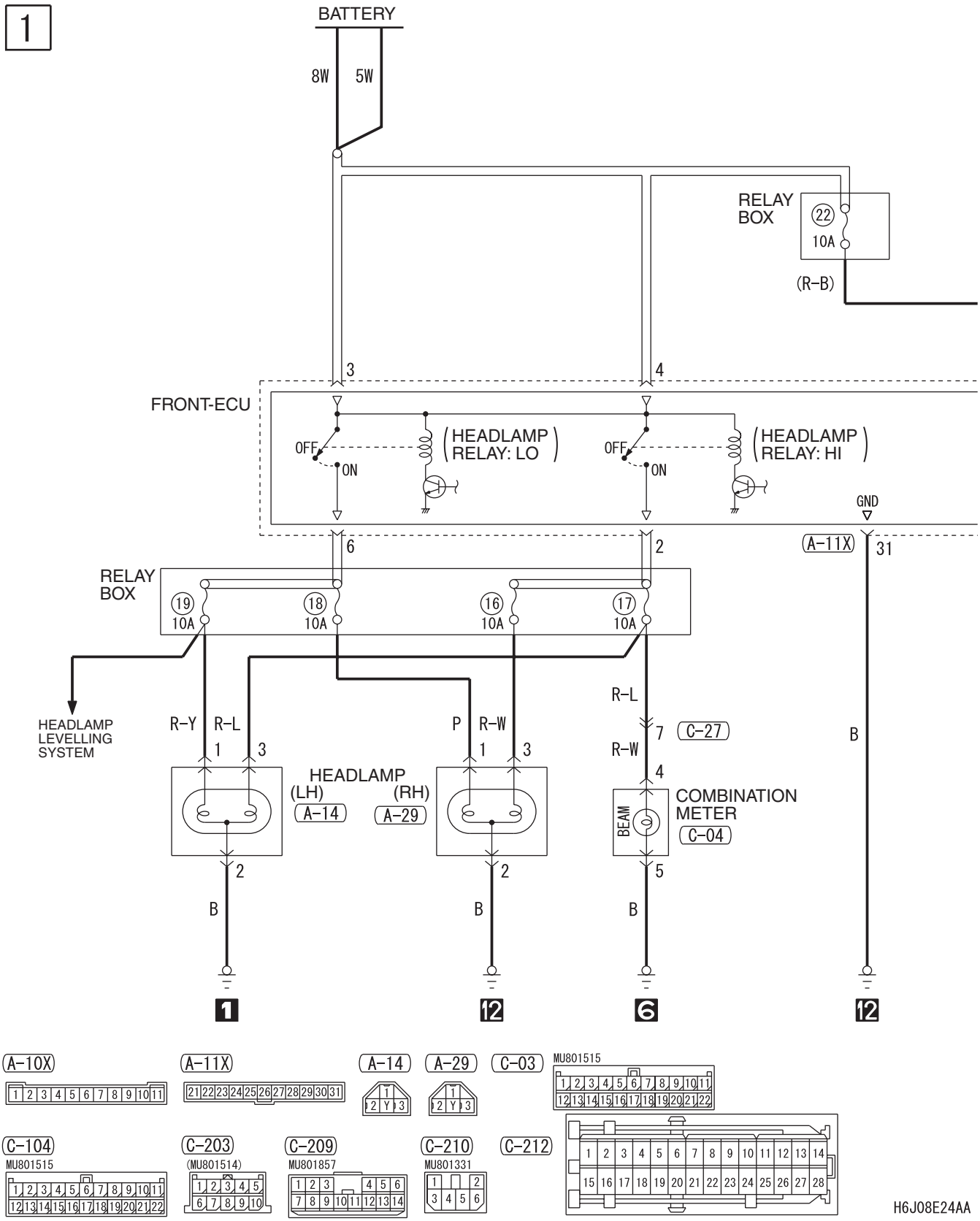

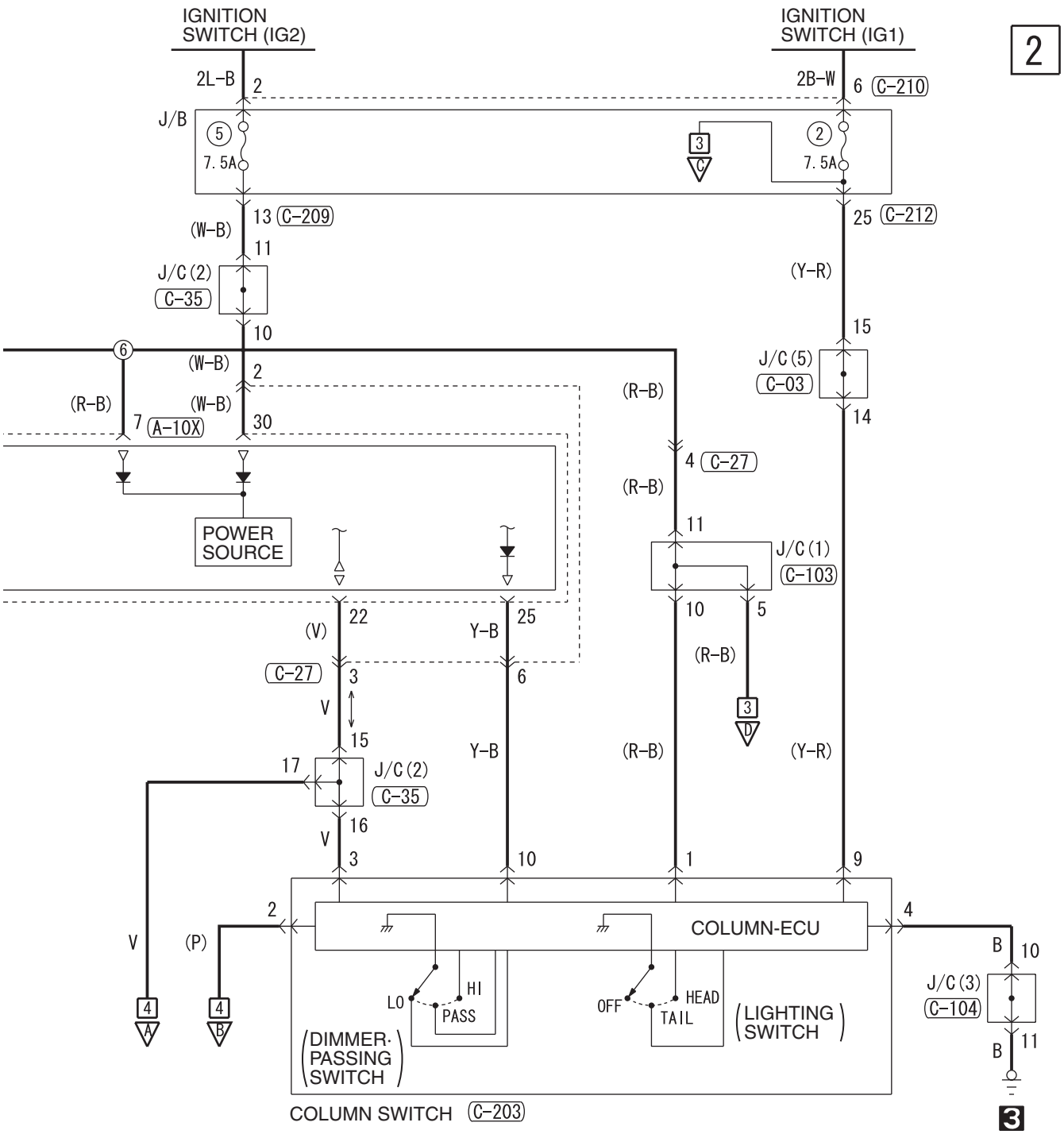

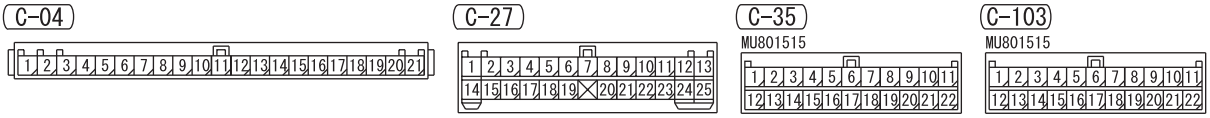

Wire colour code
B : Black LG : Light green G : Green L : Blue W : White Y : Yellow SB : Sky blue
BR : Brown O : Orange GR : Grey R : Red P : Pink V : Violet PU : Purple

H6J08E24AB

HEADLAMP <LHD> (CONTINUED)

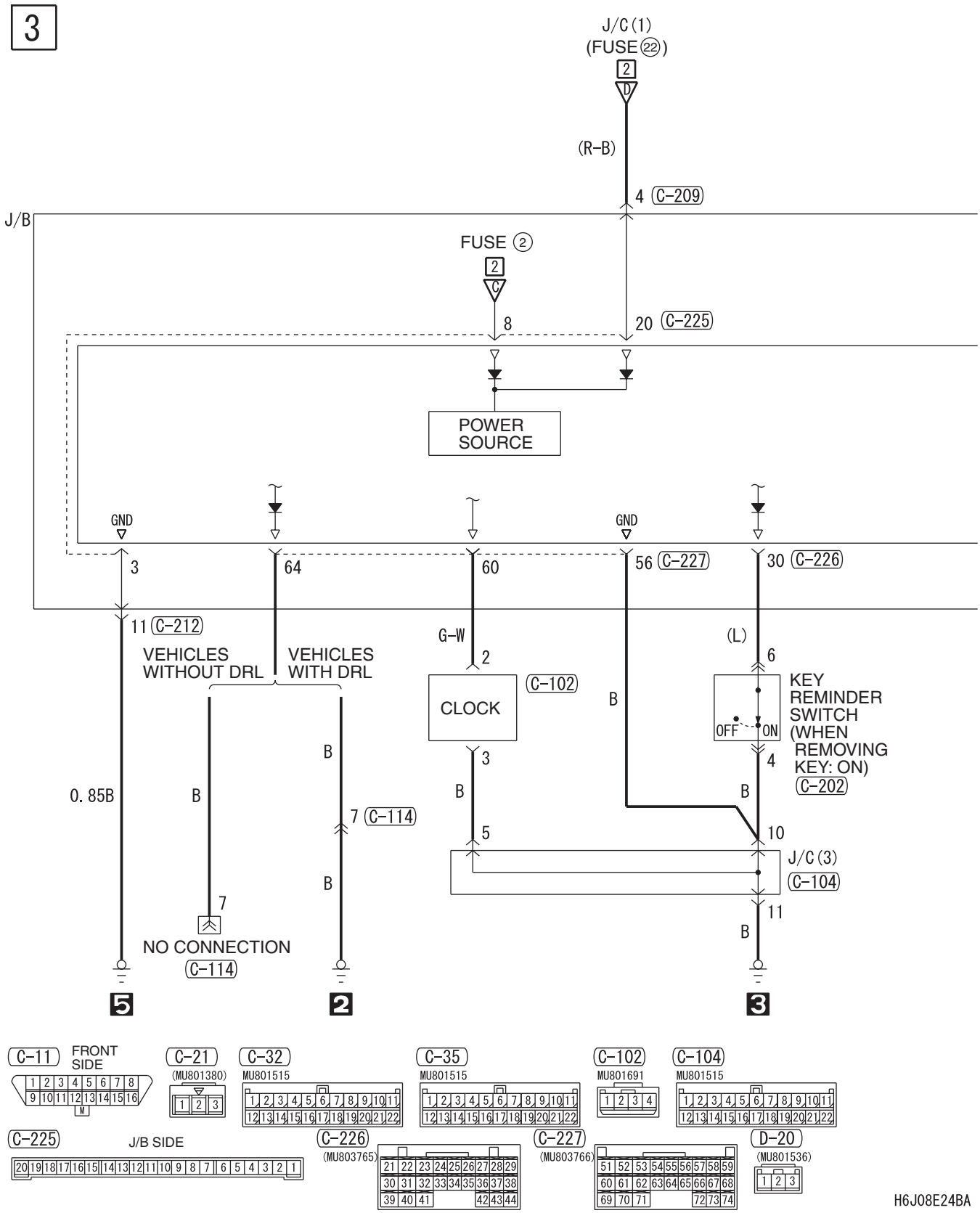

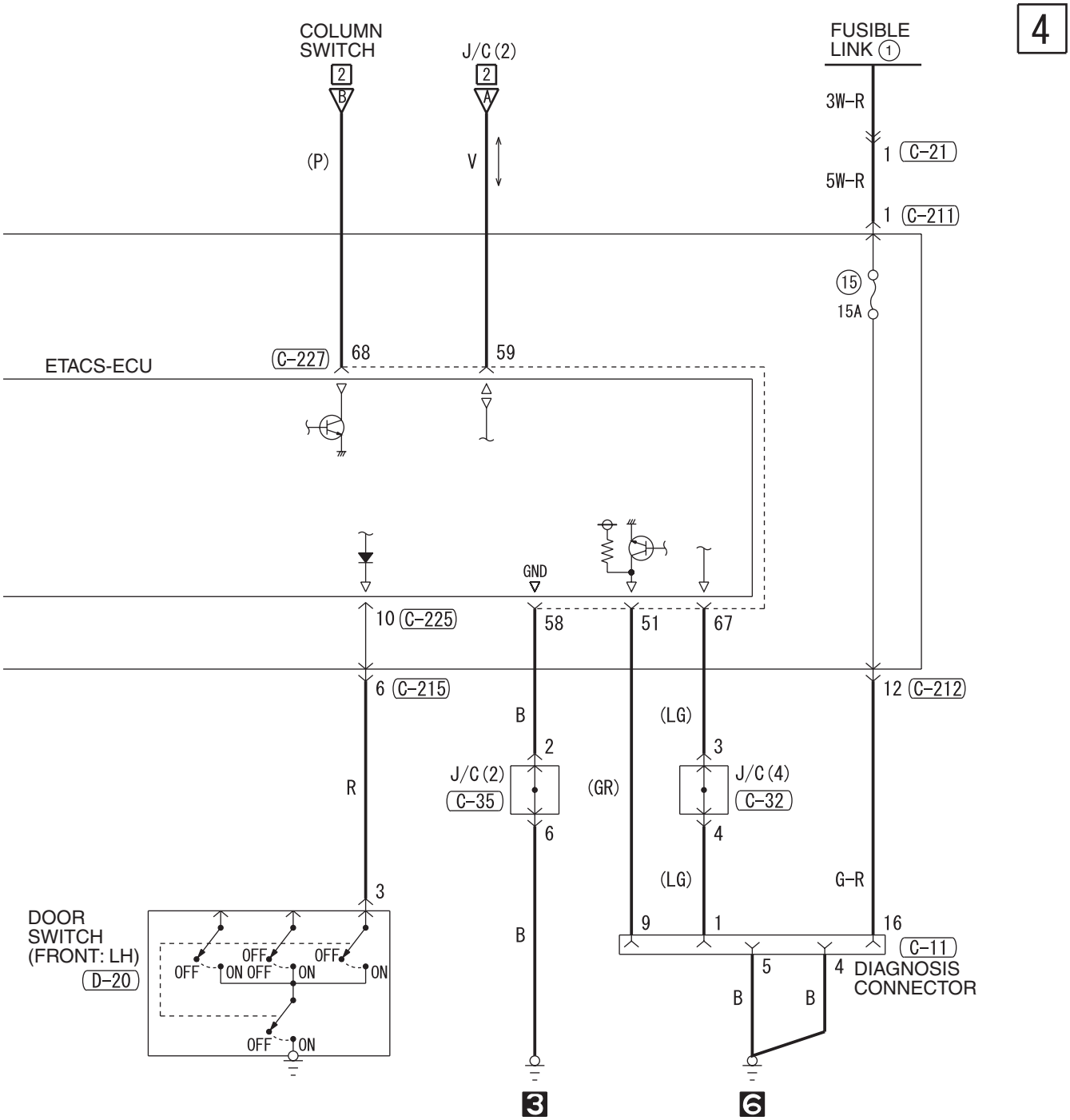

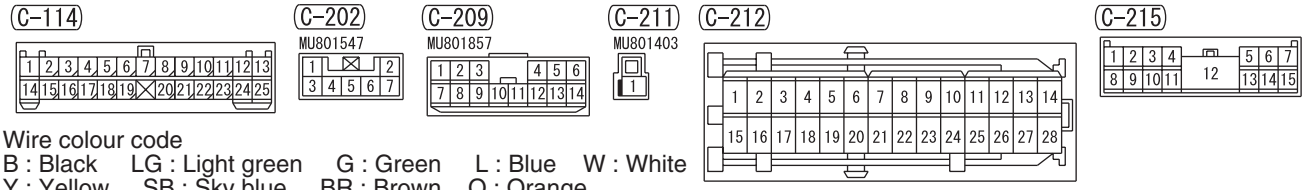

Wire colour code
B : Black LG : Light green G : Green L : Blue W : White
Y : Yellow SB : Sky blue BR : Brown O : Orange
GR : Grey R : Red P : Pink V : Violet PU : Purple

H6J08E24BB

HEADLAMP <RHD>

M1901001502284

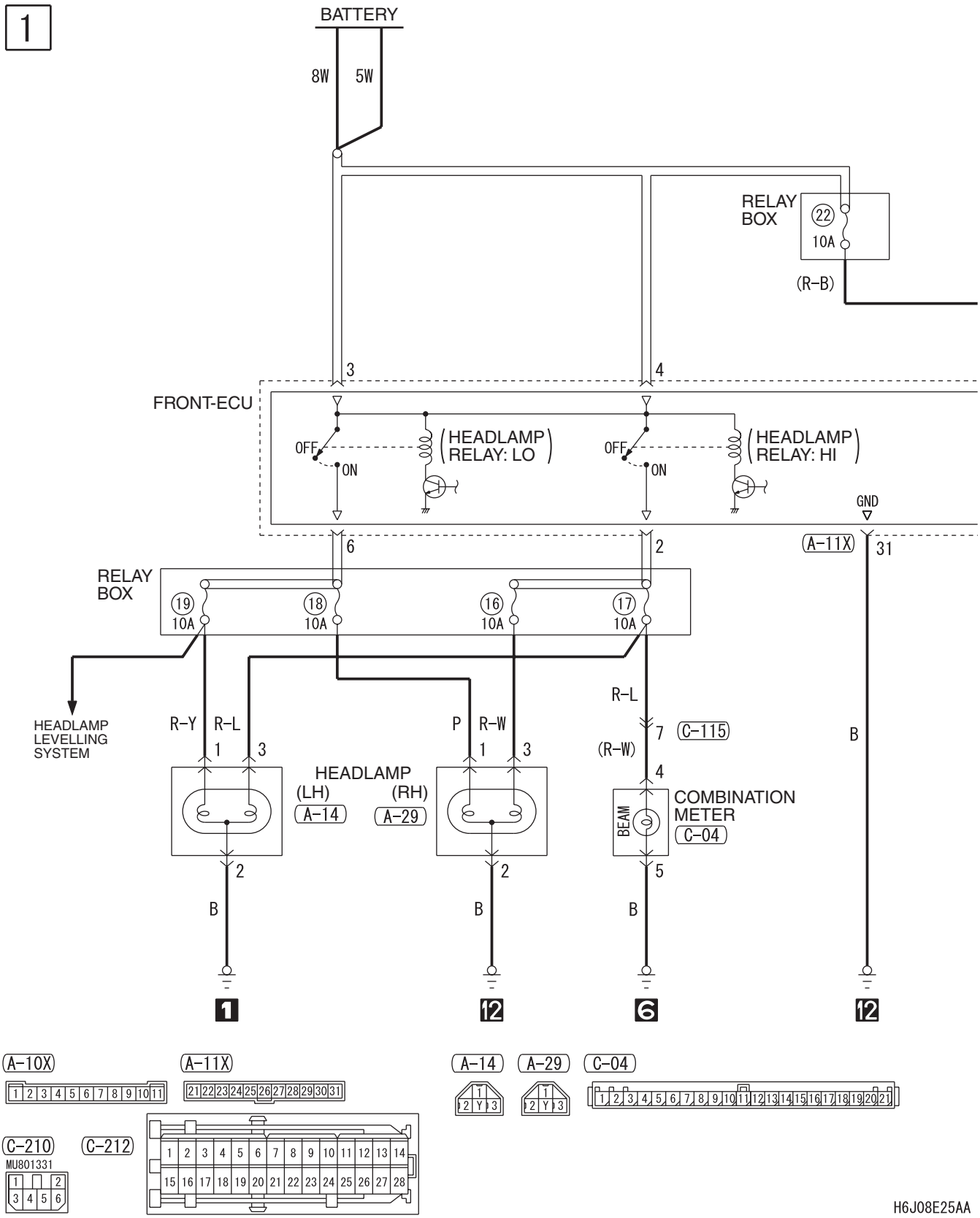

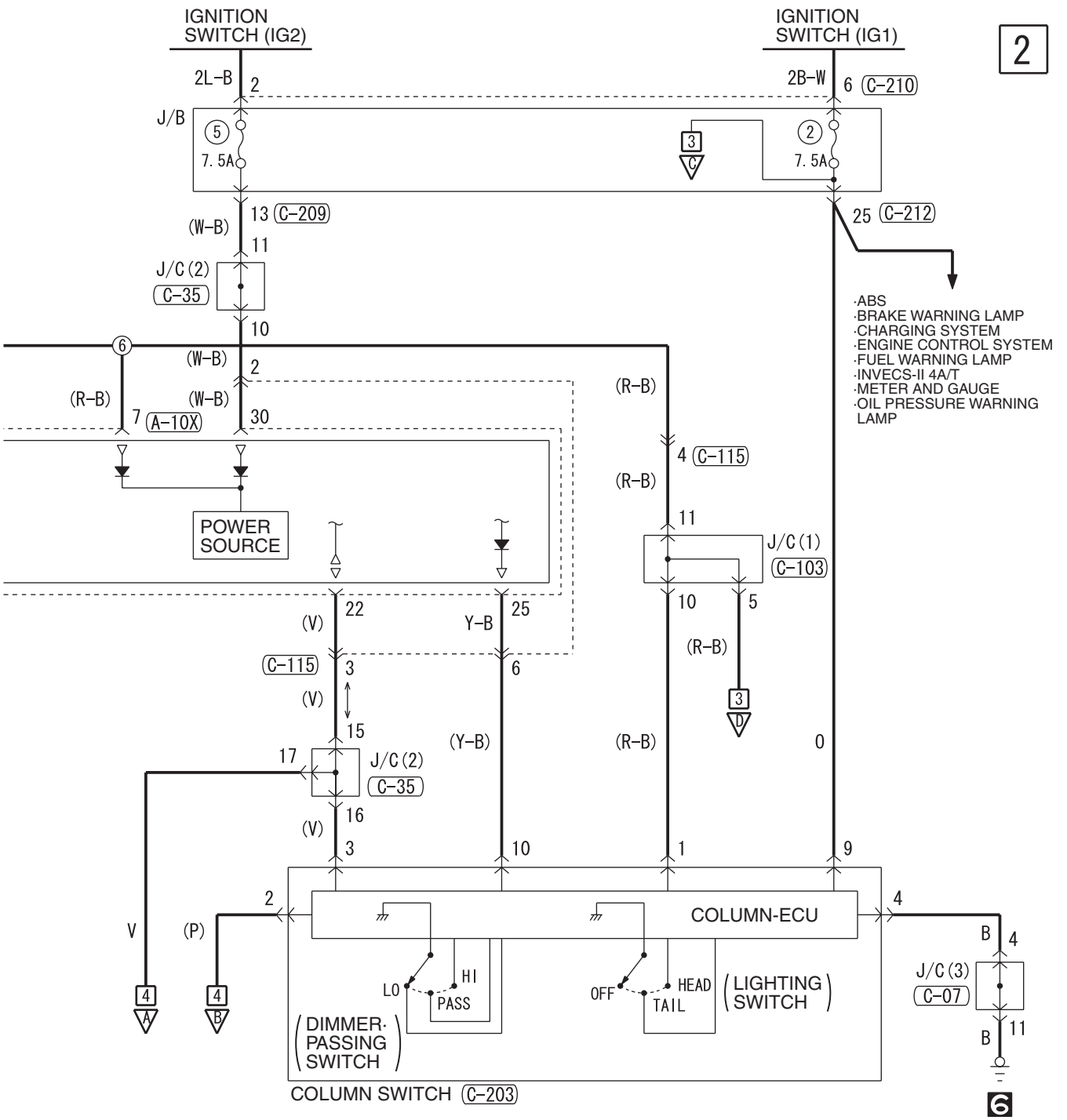

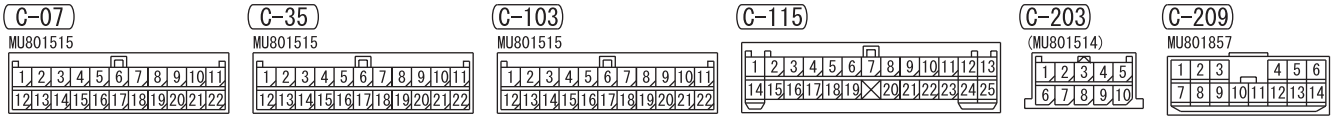

Wire colour code
B : Black LG : Light green G : Green L : Blue W : White Y : Yellow SB : Sky blue
BR : Brown O : Orange GR : Grey R : Red P : Pink V : Violet PU : Purple

H6J08E25AB

HEADLAMP <RHD> (CONTINUED)

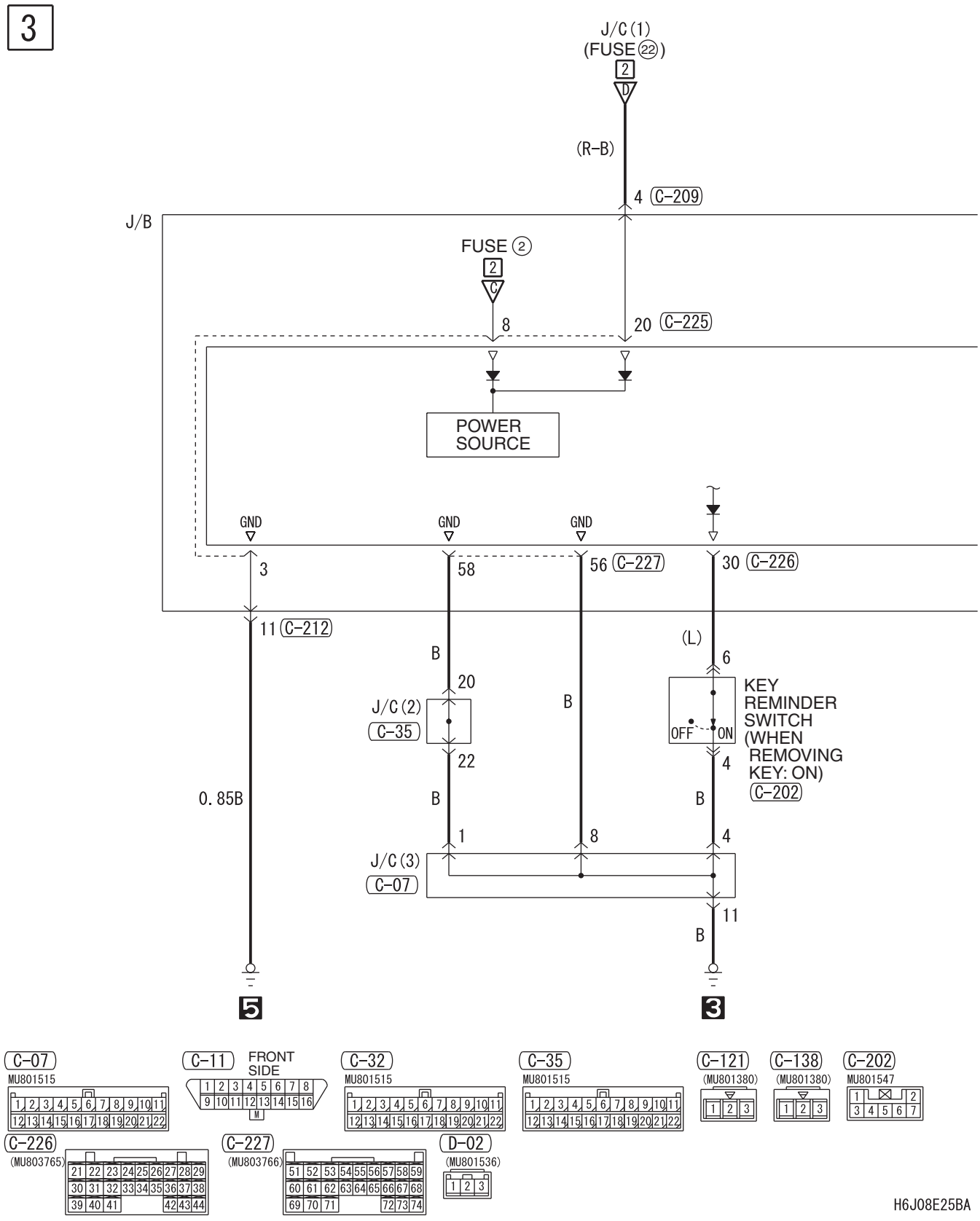

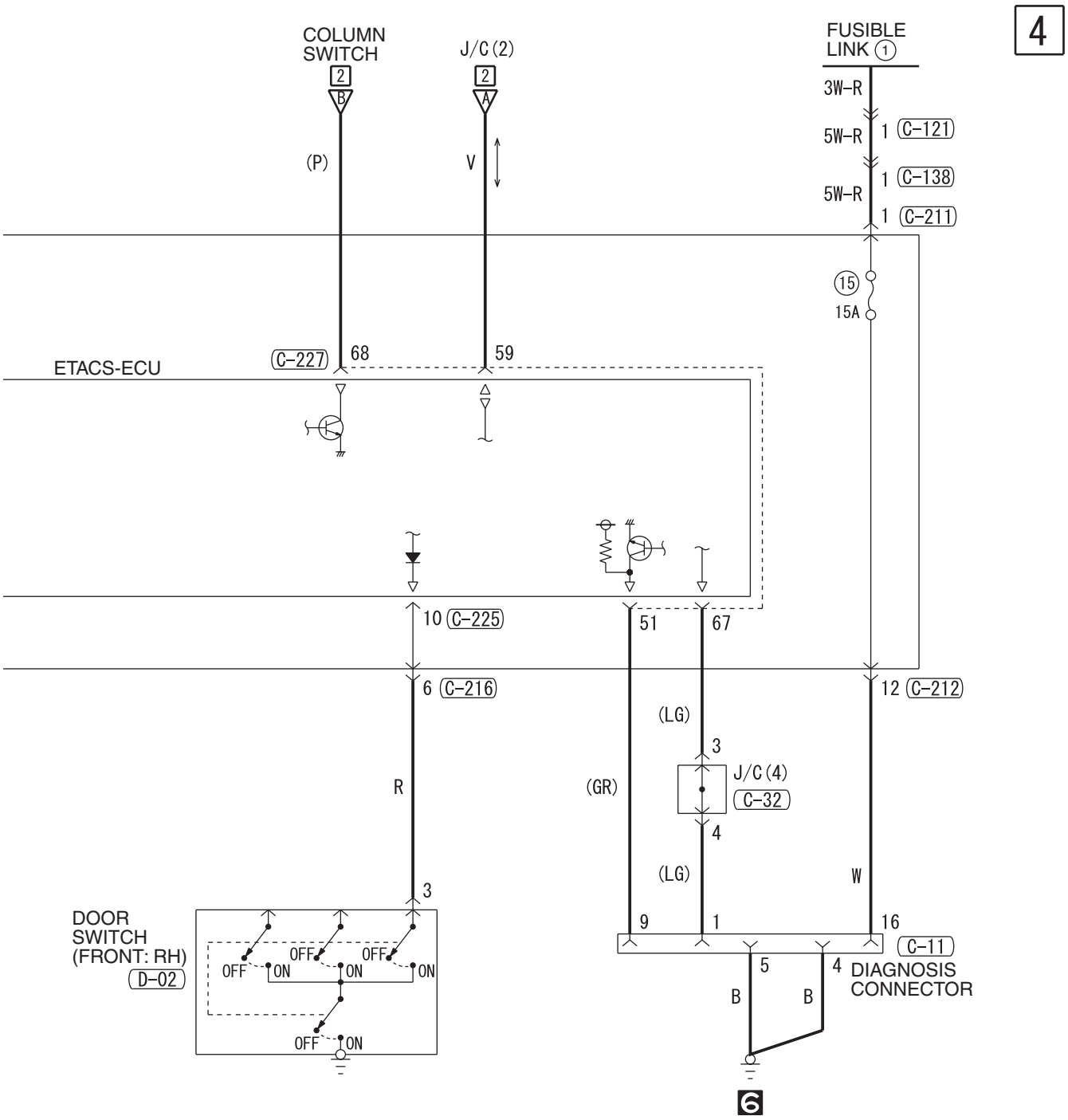

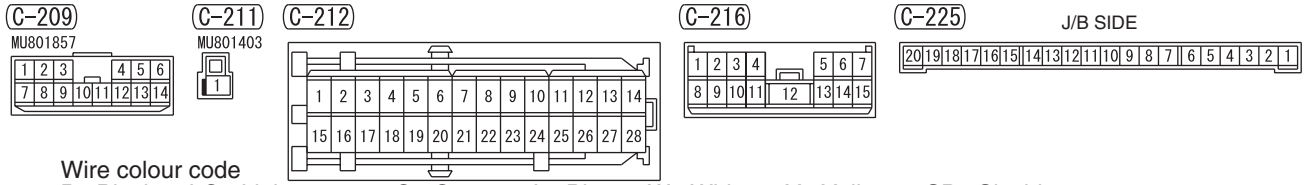

Wire colour code
B : Black LG : Light green G : Green L : Blue W : White Y : Yellow SB : Sky blue
BR : Brown O : Orange GR : Grey R : Red P : Pink V : Violet PU : Purple

H6J08E25BB

TAIL LAMP, POSITION LAMP, LICENCE PLATE LAMP AND LIGHTING MONITOR BUZZER

TAIL LAMP, POSITION LAMP, LICENCE PLATE LAMP AND LIGHTING MONITOR BUZZER <LHD>

M1901001700981

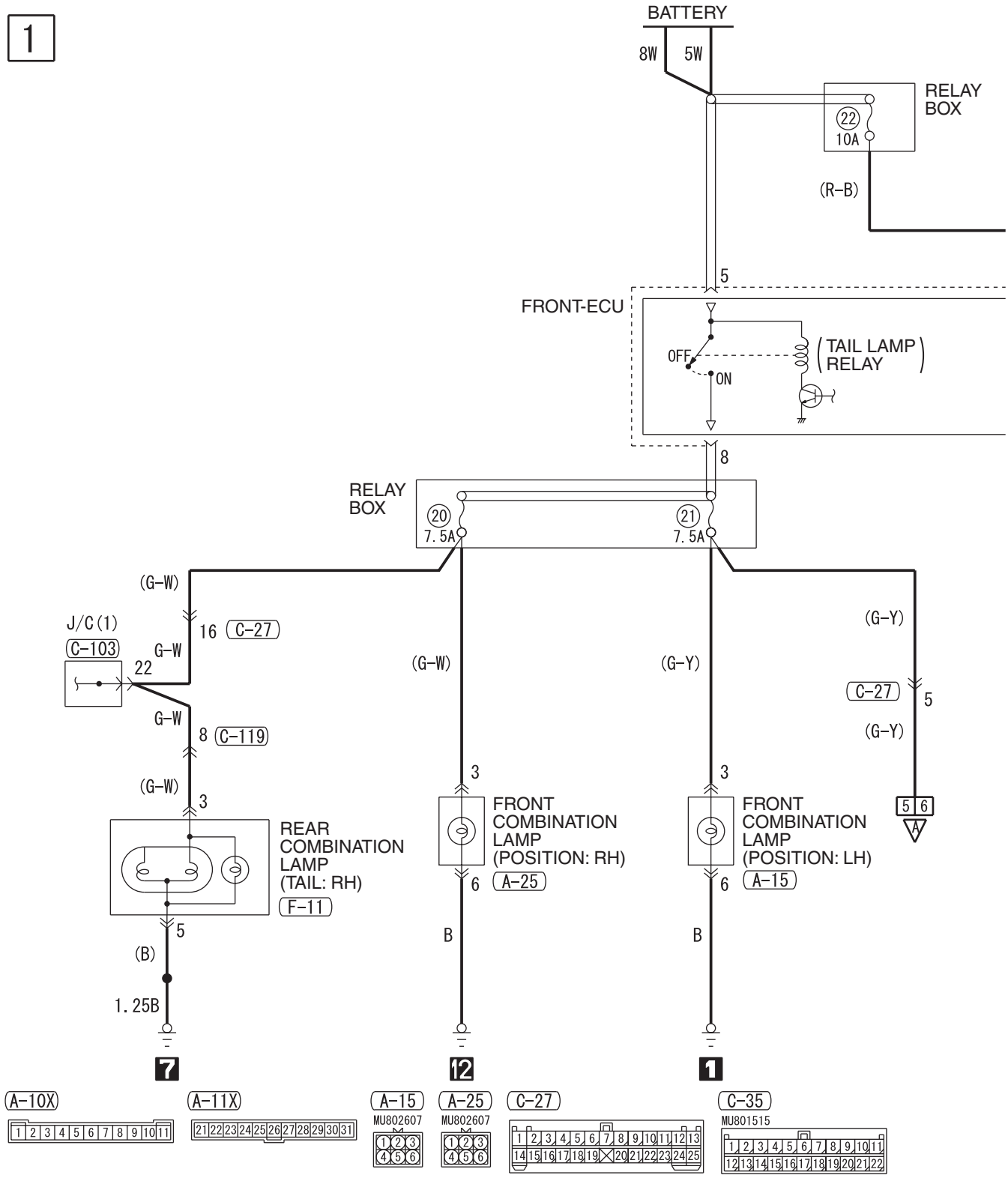

H6J08E26AA

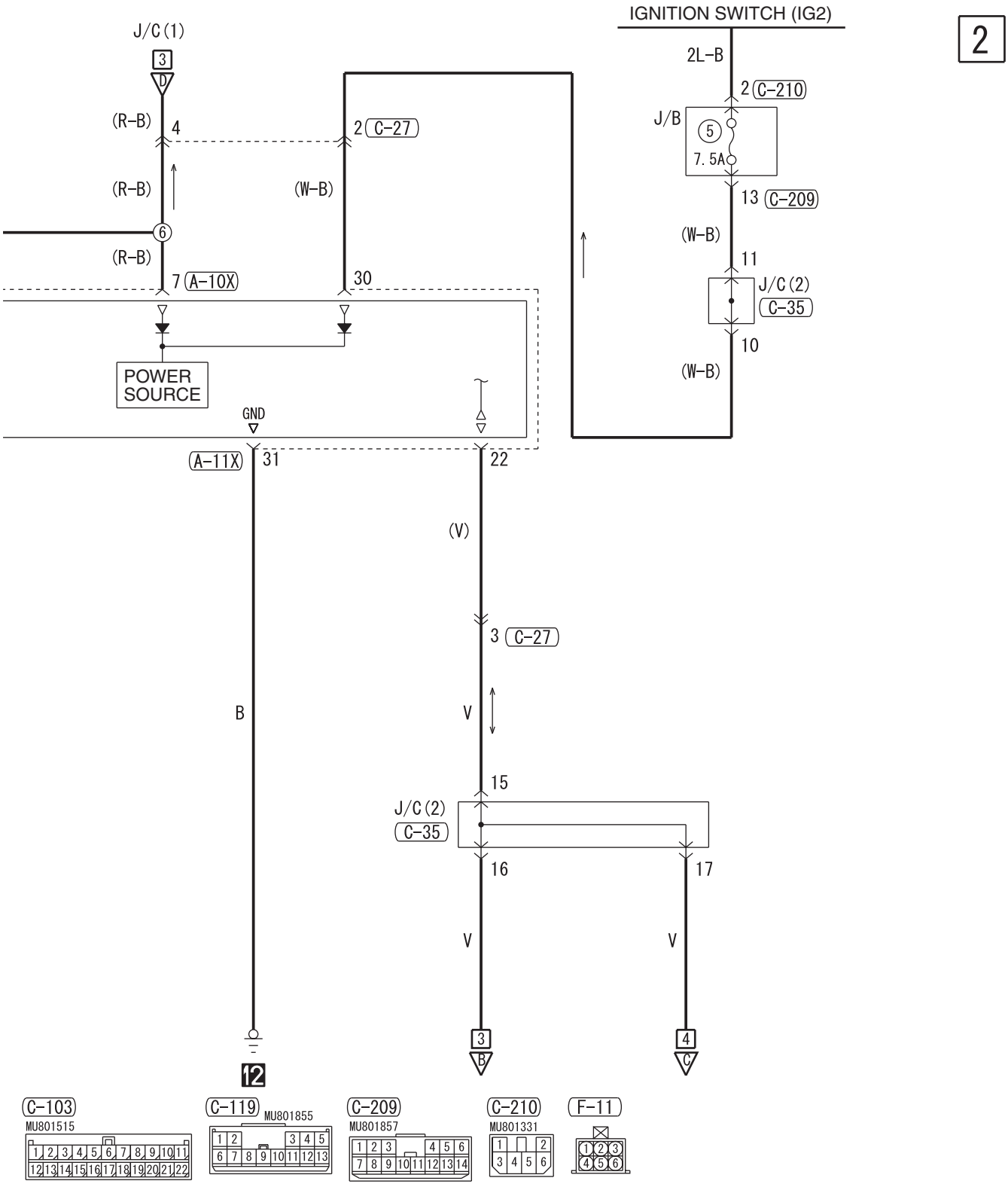

Wire colour code
B : Black LG : Light green G : Green L : Blue W : White Y : Yellow SB : Sky blue
BR : Brown O : Orange GR : Grey R : Red P : Pink V : Violet PU : Purple

H6J08E26AB

TAIL LAMP, POSITION LAMP, LICENCE PLATE LAMP AND LIGHTING MONITOR BUZZER <LHD> (CONTINUED)

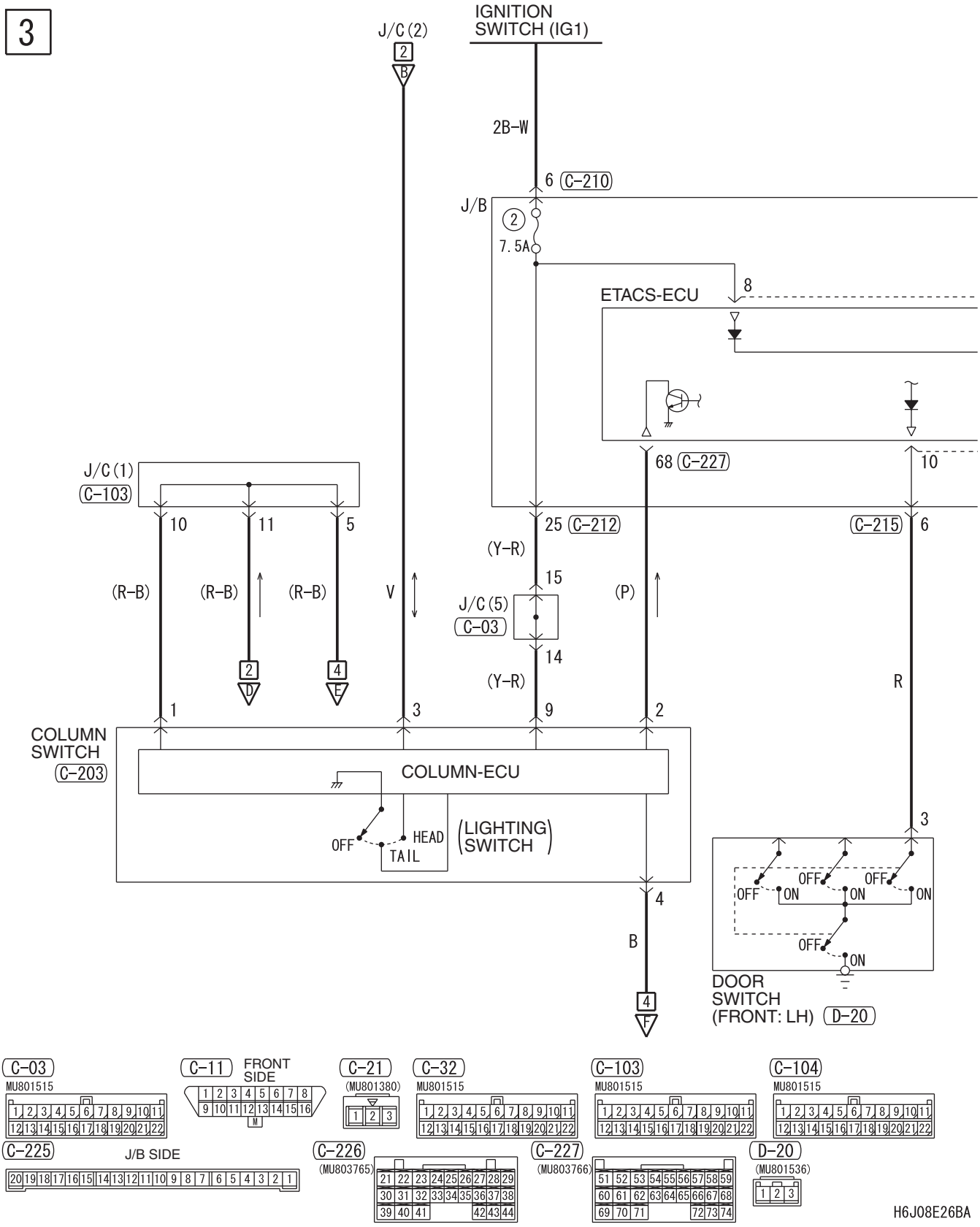

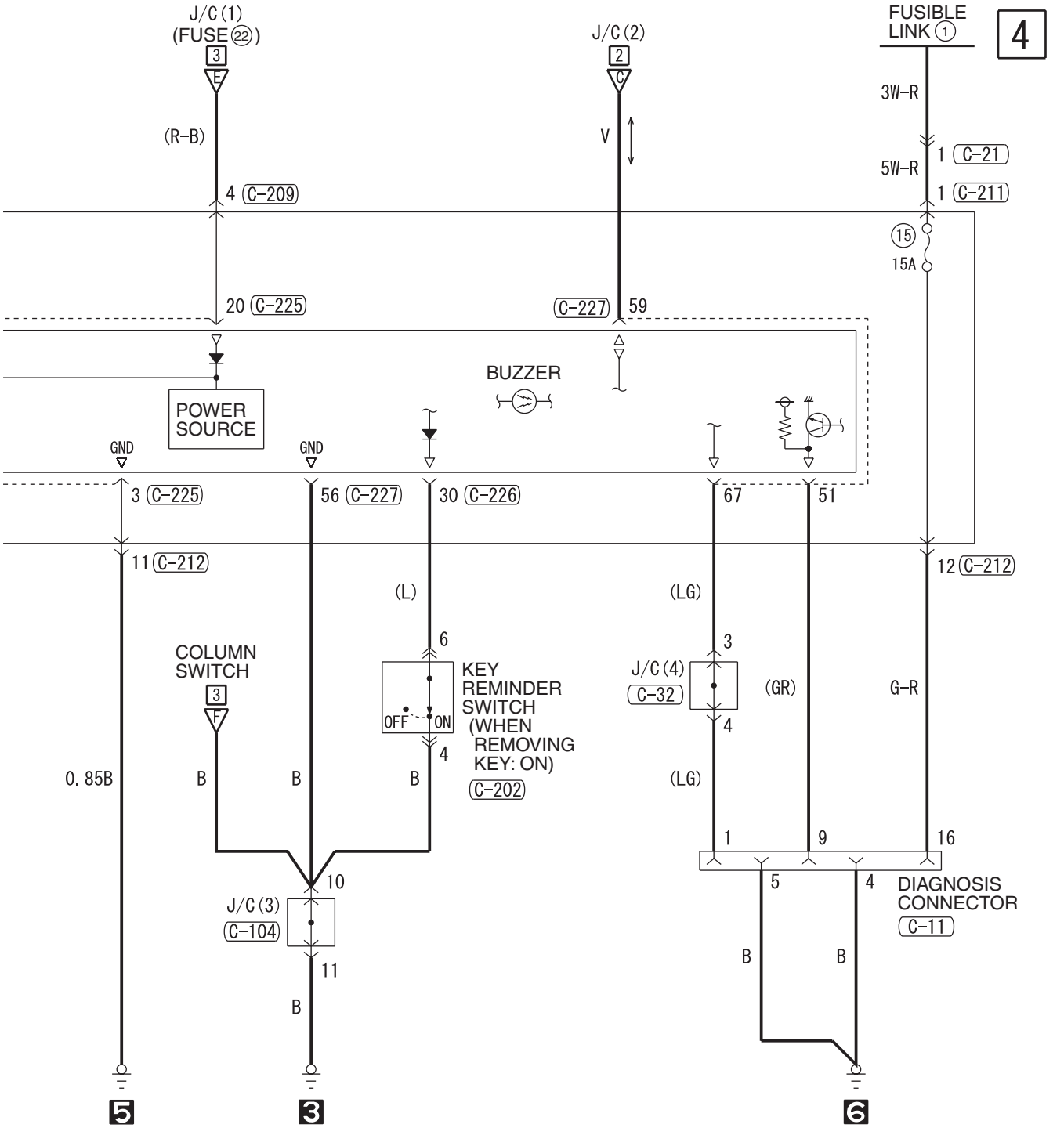

Wire colour code
B : Black LG : Light green G : Green L : Blue W : White Y : Yellow SB : Sky blue
BR : Brown O : Orange GR : Grey R : Red P : Pink V : Violet PU : Purple

H6J08E26BB

TAIL LAMP, POSITION LAMP, LICENCE PLATE LAMP AND LIGHTING MONITOR BUZZER <LHD> (CONTINUED)

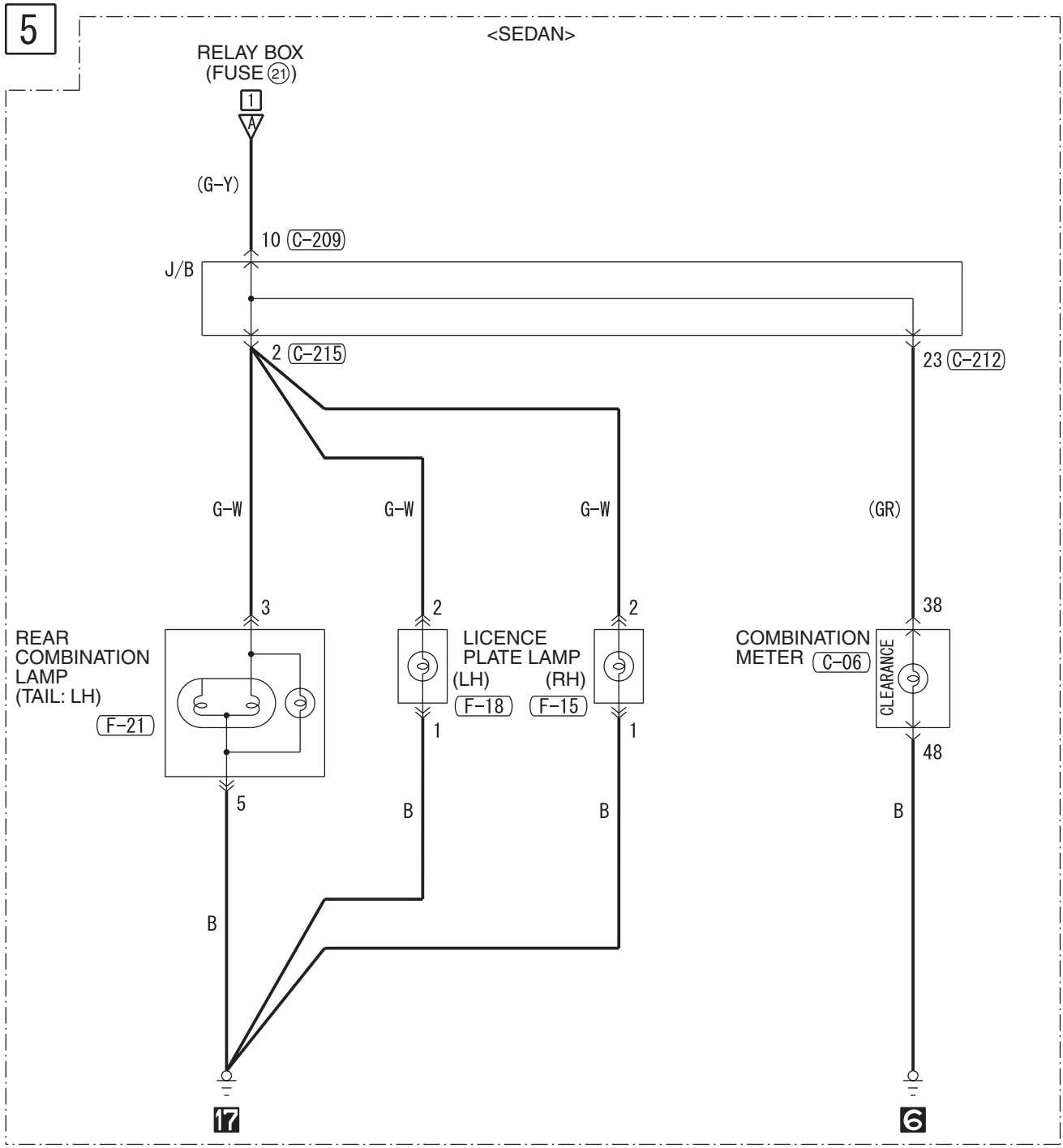

H6J08E26CA

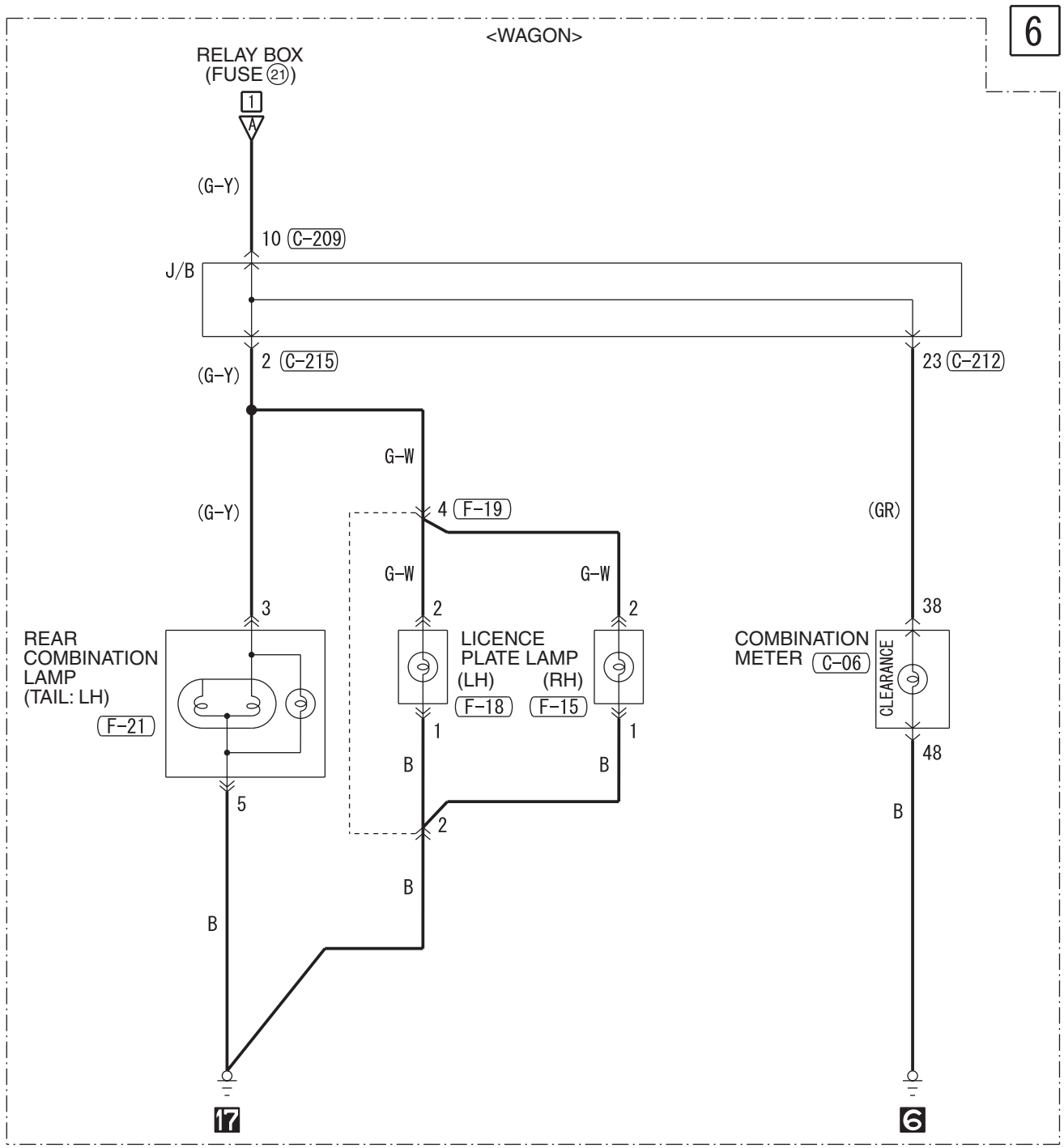

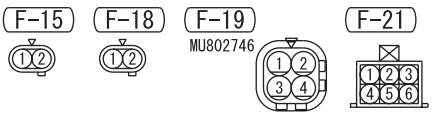

Wire colour code
B : Black LG : Light green G : Green L : Blue W : White Y : Yellow SB : Sky blue
BR : Brown O : Orange GR : Grey R : Red P : Pink V : Violet PU : Purple

H6J08E26CB

TAIL LAMP, POSITION LAMP, LICENCE PLATE LAMP AND LIGHTING MONITOR BUZZER <RHD>

M1901001700992

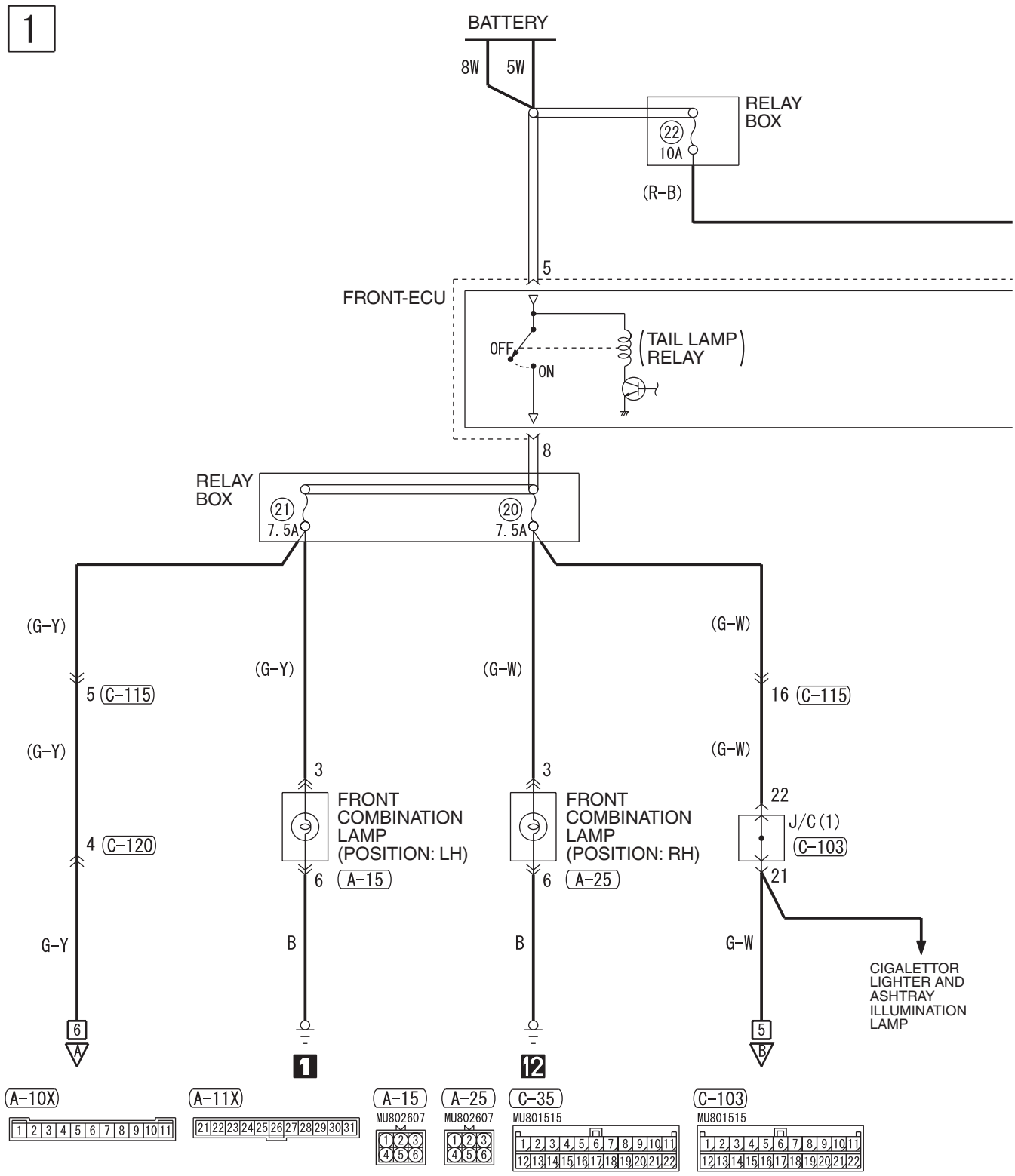

H6J08E27AA

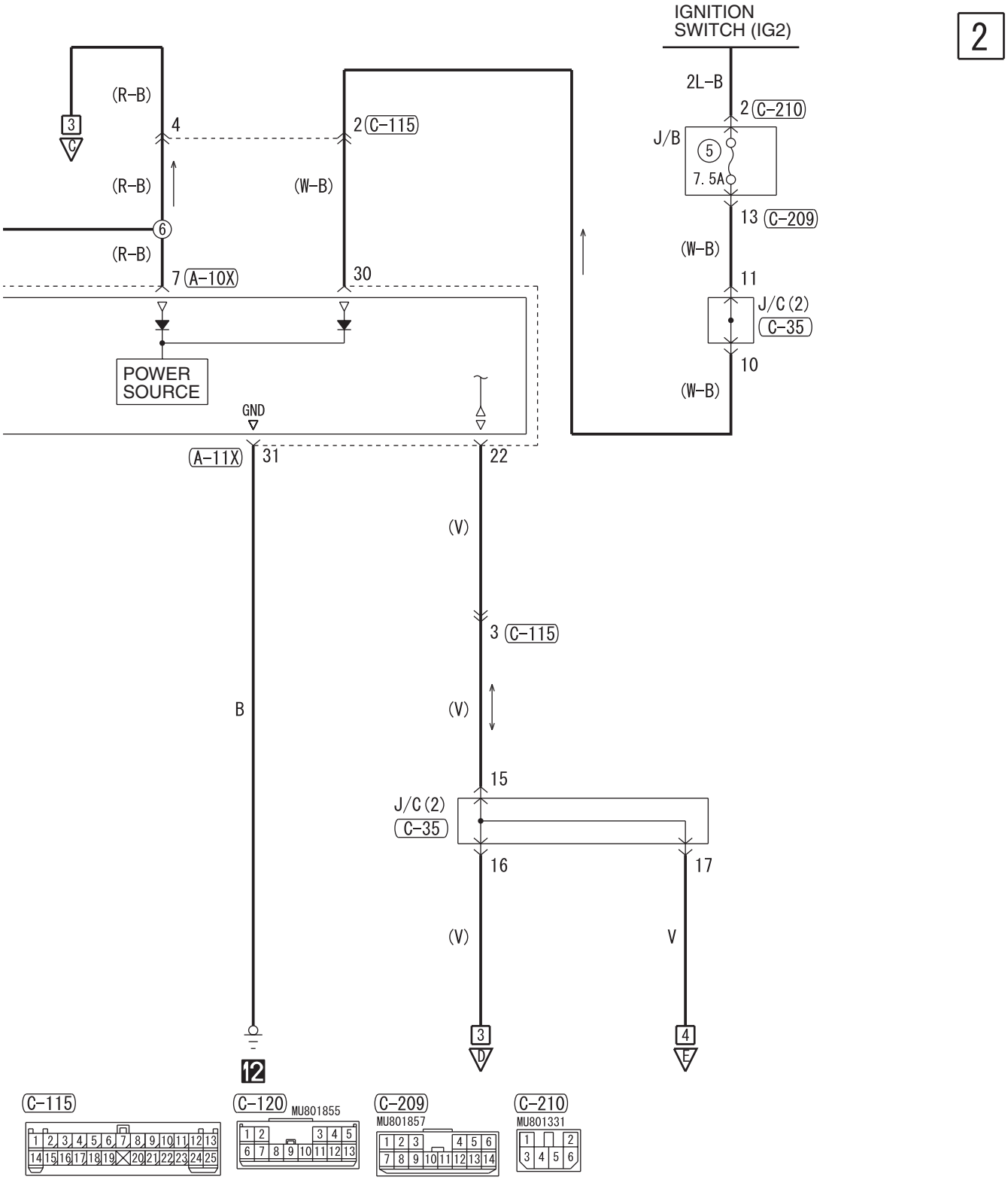

Wire colour code
B : Black LG : Light green G : Green L : Blue W : White Y : Yellow SB : Sky blue
BR : Brown O : Orange GR : Grey R : Red P : Pink V : Violet PU : Purple

H6J08E27AB

TAIL LAMP, POSITION LAMP, LICENCE PLATE LAMP AND LIGHTING MONITOR BUZZER <RHD> (CONTINUED)

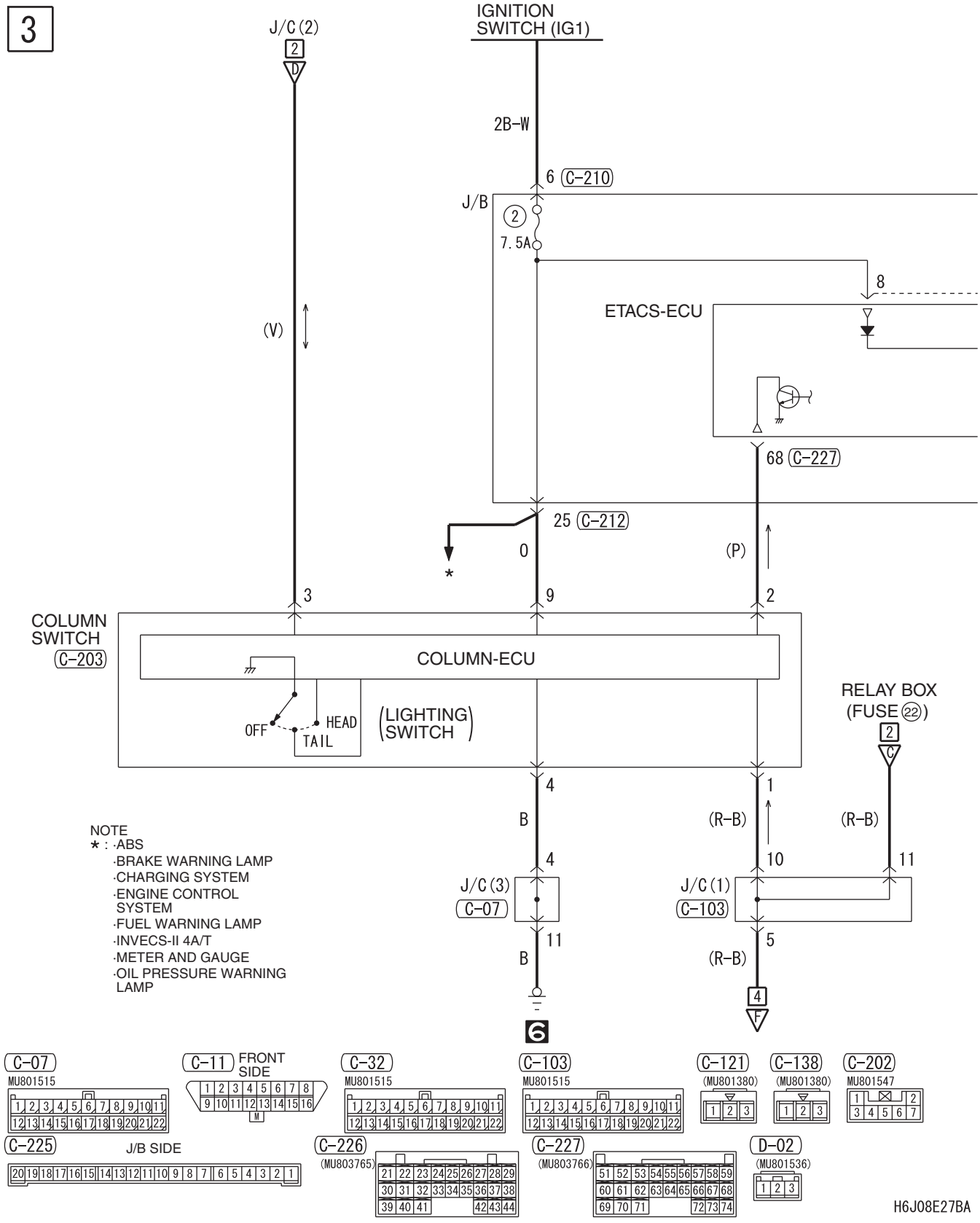

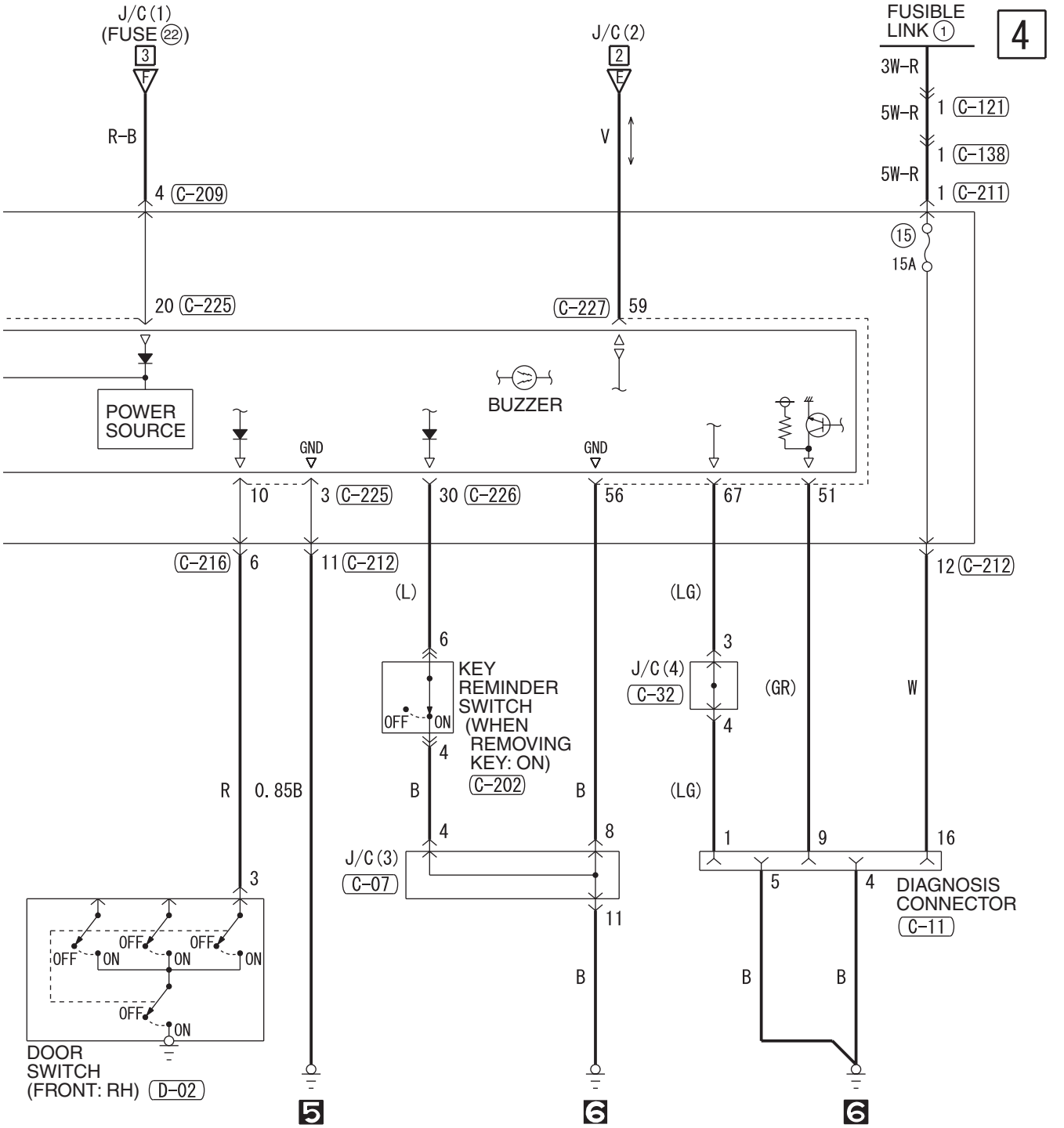

Wire colour code
B : Black LG : Light green G : Green L : Blue W : White Y : Yellow SB : Sky blue
BR : Brown O : Orange GR : Grey R : Red P : Pink V : Violet PU : Purple

H6J08E27BB

TAIL LAMP, POSITION LAMP, LICENCE PLATE LAMP AND LIGHTING MONITOR BUZZER <RHD> (CONTINUED)

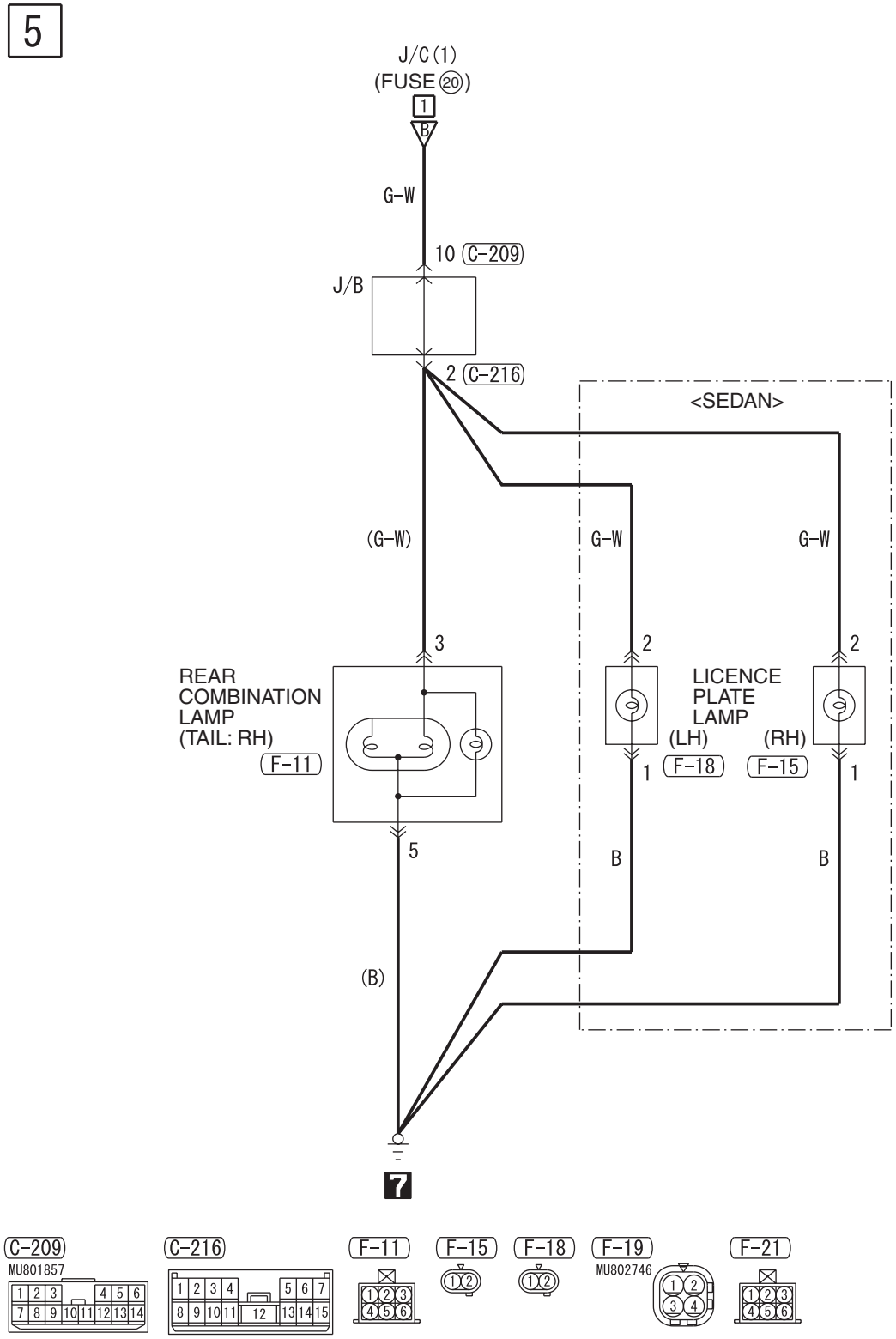

H6J08E27CA

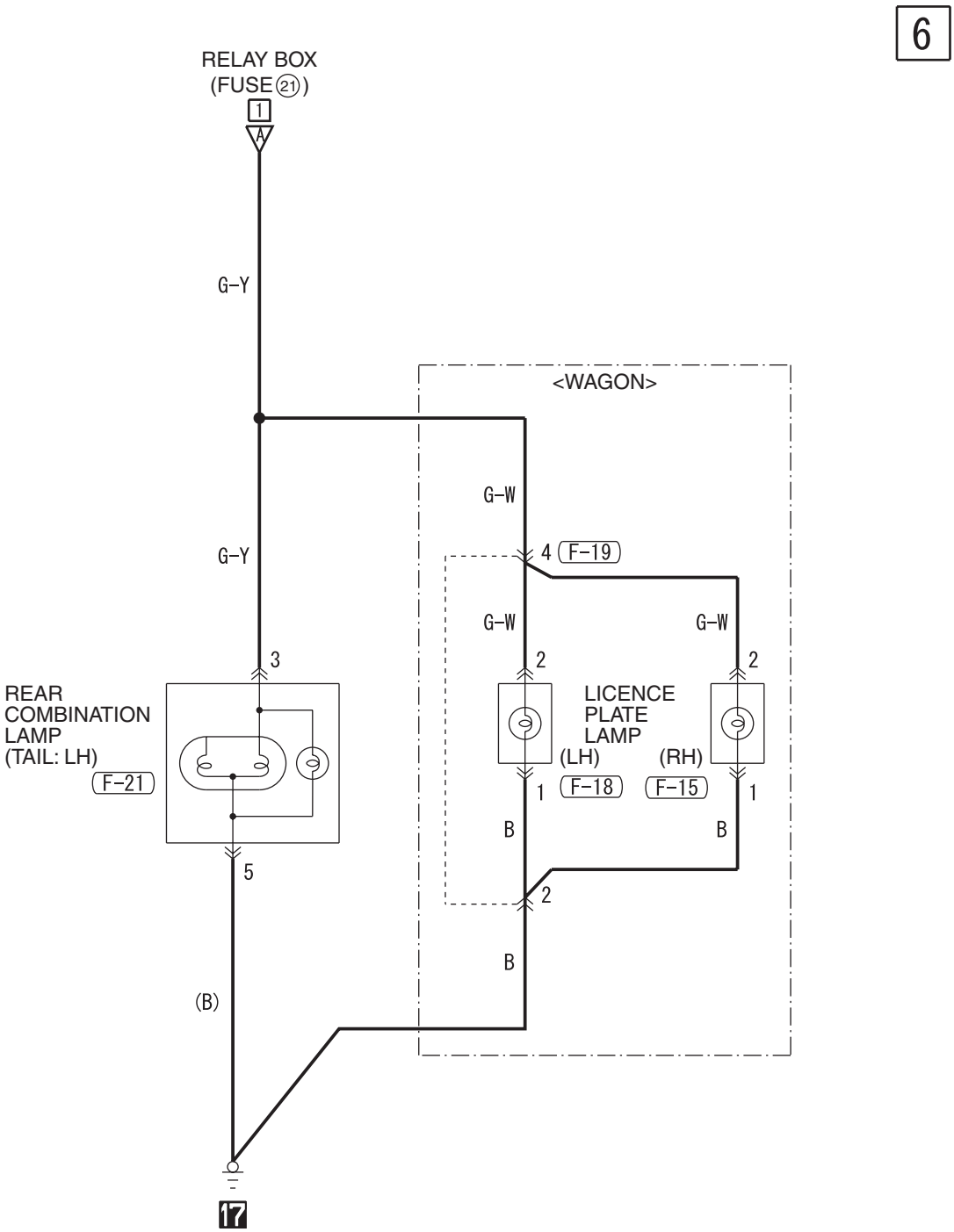

Wire colour code
B : Black LG : Light green G : Green L : Blue W : White Y : Yellow SB : Sky blue
BR : Brown O : Orange GR : Grey R : Red P : Pink V : Violet PU : Purple

H6J08E27CB

FRONT FOG LAMP

FRONT FOG LAMP <LHD>

M1901011900782

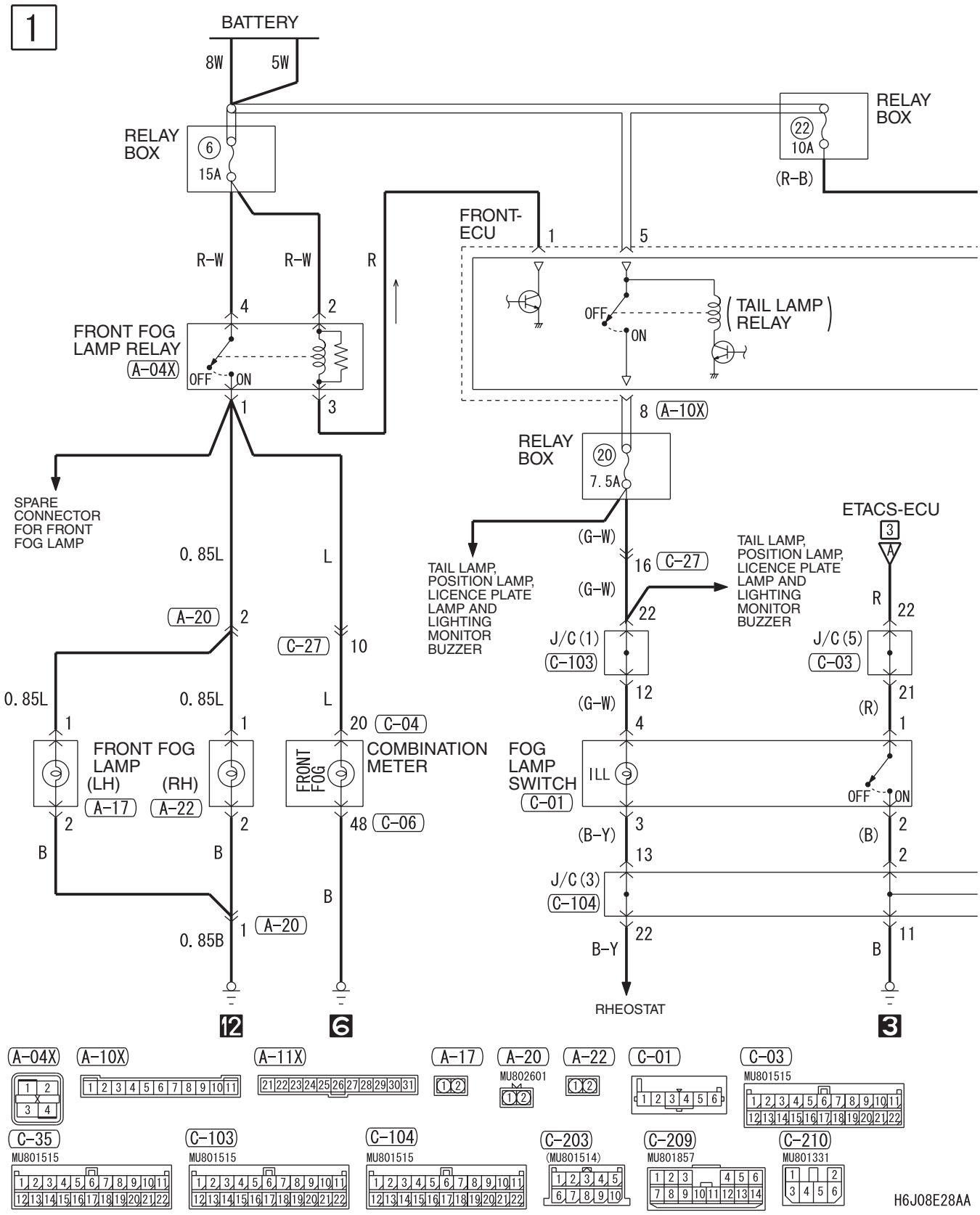

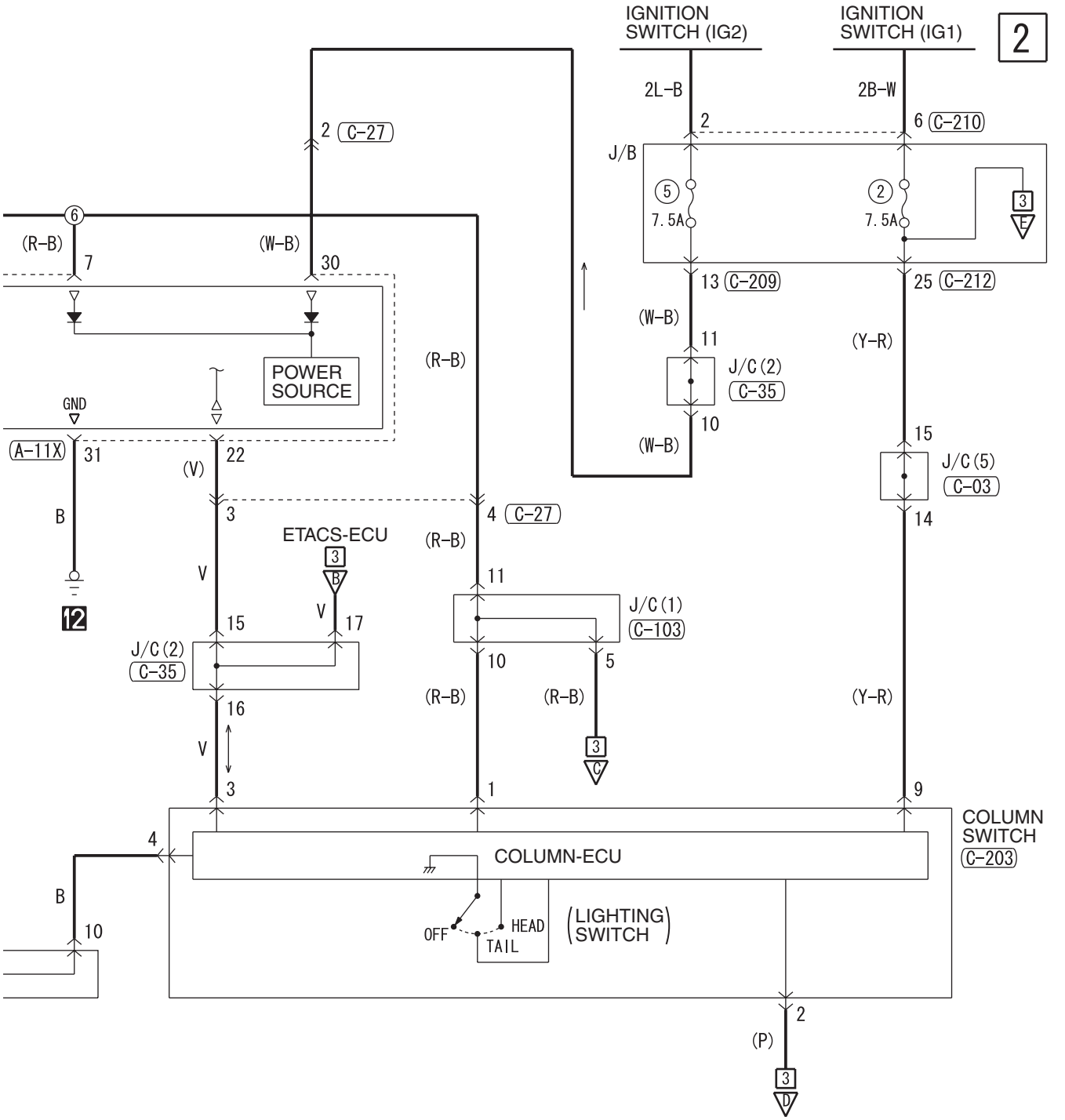
IGNITION SWITCH (IG2)
IGNITION SWITCH (IG1)
2
2L-B
2B-W
2 C-27
6 C-210
J/B
5
7.5A
2
7.5A
3
E
6
(R-B)
7
(W-B)
30
13 C-209
25 C-212
(W-B)
11
(Y-R)
J/C (2)
C-35
POWER SOURCE
(R-B)
GND
10
(W-B)
15
J/C (5)
C-03
A-11X
31
22
(V)
B
3
4 C-27
14
ETACS-ECU
(R-B)
3
B
V
11
12
V
17
J/C (1)
C-103
15
J/C (2)
C-35
10
5
16
(R-B)
(R-B)
(Y-R)
V
3
C
3
1
9
COLUMN SWITCH
C-203
4
COLUMN-ECU
B
10
OFF
HEAD
TAIL
LIGHTING SWITCH
2
(P)
3
D
C-04
C-06
C-27
C-212
Wire colour code
B : Black LG : Light green G : Green L : Blue W : White
Y : Yellow SB : Sky blue BR : Brown O : Orange
GR : Grey R : Red P : Pink V : Violet PU : Purple
H6J08E28AB

FRONT FOG LAMP <LHD> (CONTINUED)

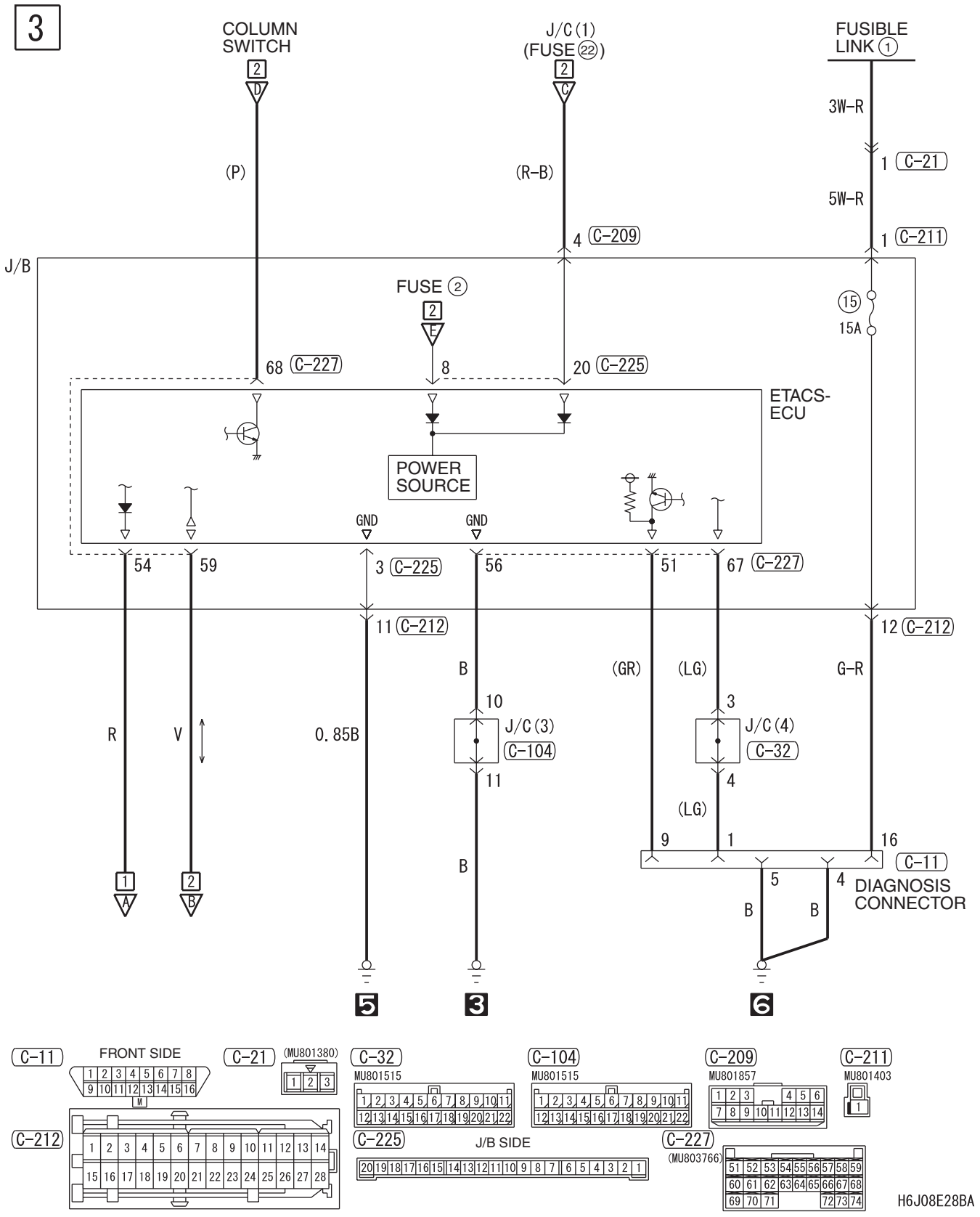

NOTES

FRONT FOG LAMP <RHD>

M1901011900793

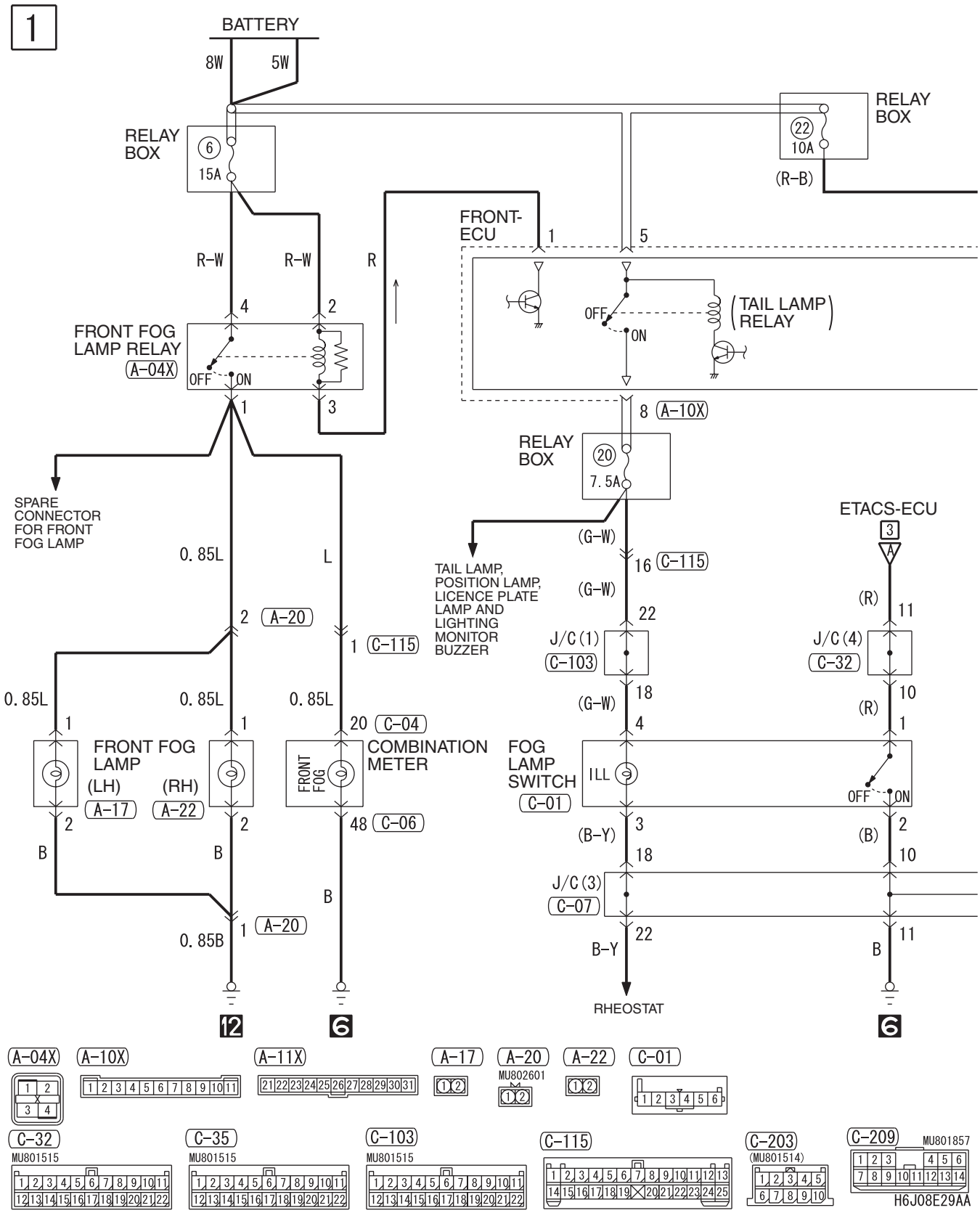

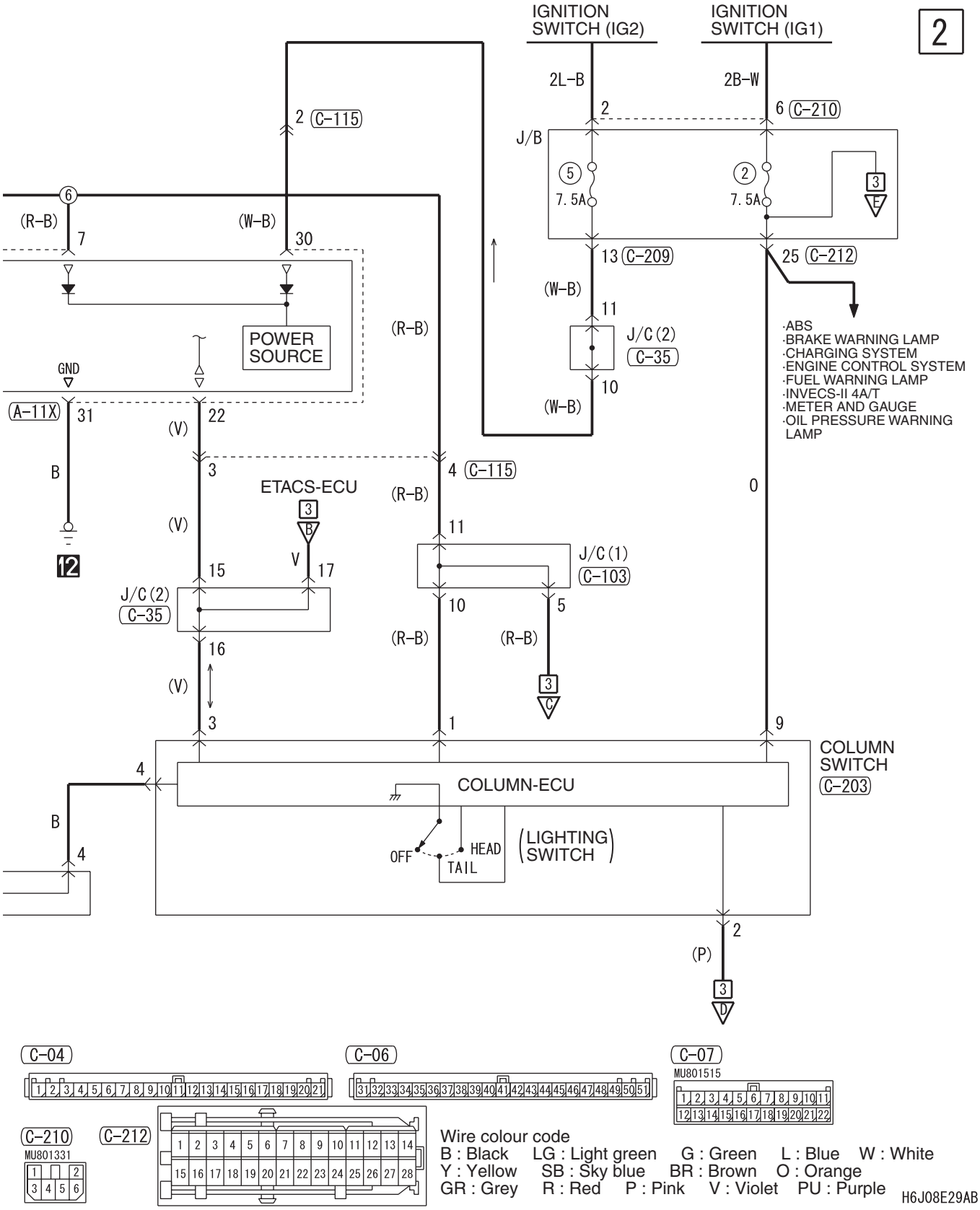
IGNITION SWITCH (IG2)
IGNITION SWITCH (IG1)
2
2L-B
2B-W
2 (C-115)
6 (C-210)
J/B
5
7.5A
2
7.5A
3
E
6
(R-B)
7
(W-B)
30
13 (C-209)
25 (C-212)
(W-B)
11
POWER SOURCE
(R-B)
J/C (2)
(C-35)
10
(W-B)
·ABS
·BRAKE WARNING LAMP
·CHARGING SYSTEM
·ENGINE CONTROL SYSTEM
·FUEL WARNING LAMP
·INVECS-II 4A/T
·METER AND GAUGE
·OIL PRESSURE WARNING LAMP
GND
(A-11X)
31
22
(V)
B
3
4 (C-115)
ETACS-ECU
(R-B)
0
3
B
(V)
11
12
V
17
J/C (1)
(C-103)
15
J/C (2)
(C-35)
10
5
16
(R-B)
(R-B)
(V)
3
C
3
1
9
COLUMN SWITCH
(C-203)
4
COLUMN-ECU
B
4
OFF
HEAD
TAIL
LIGHTING SWITCH
2
(P)
3
D
C-04
C-06
C-07
MU801515
C-210
MU801331
C-212
Wire colour code
B : Black LG : Light green G : Green L : Blue W : White
Y : Yellow SB : Sky blue BR : Brown O : Orange
GR : Grey R : Red P : Pink V : Violet PU : Purple
H6J08E29AB

FRONT FOG LAMP <RHD> (CONTINUED)

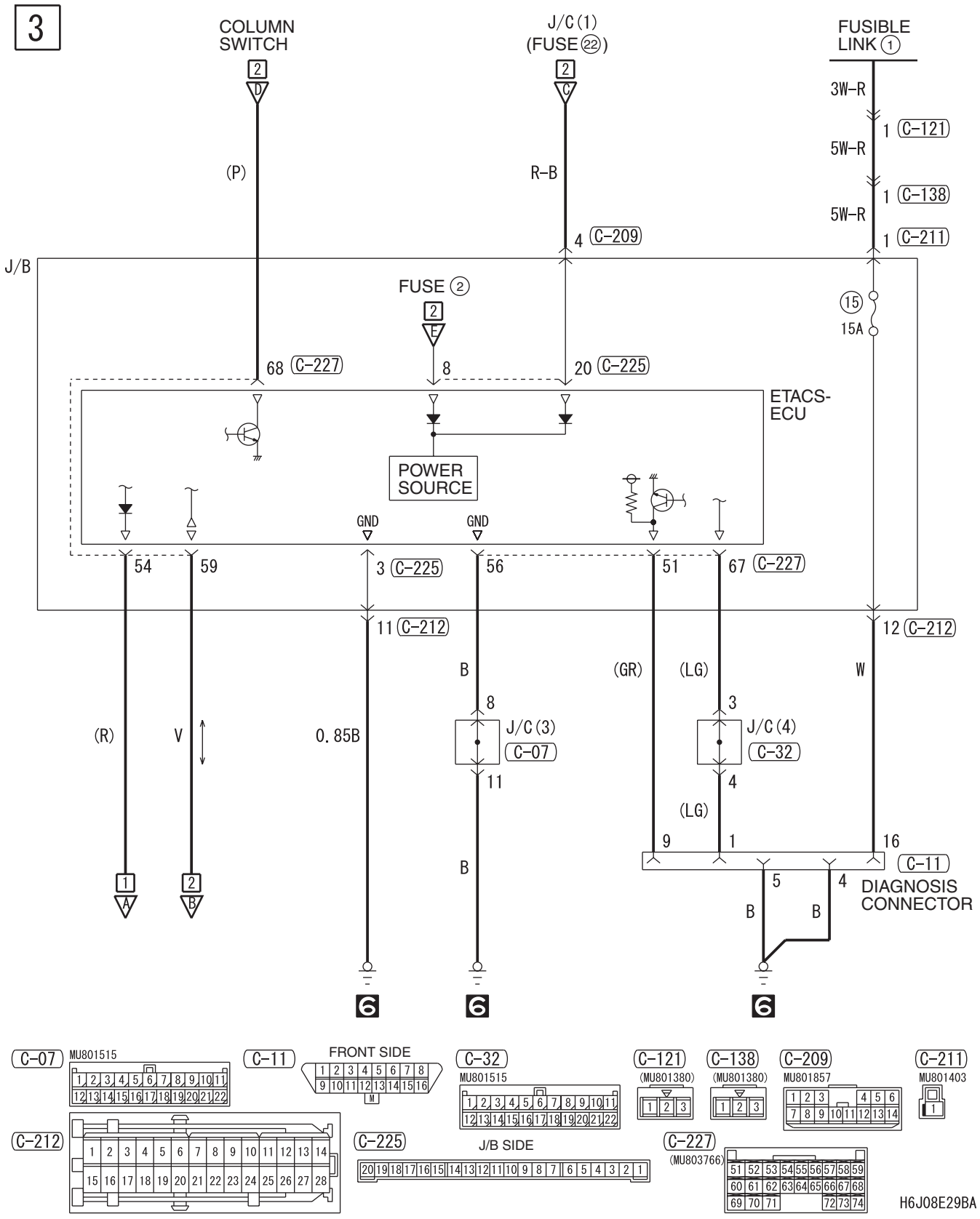

NOTES

ROOM LAMP AND LUGGAGE COMPARTMENT LAMP

ROOM LAMP AND LUGGAGE COMPARTMENT LAMP <SEDAN (LHD)>

M1901017800318

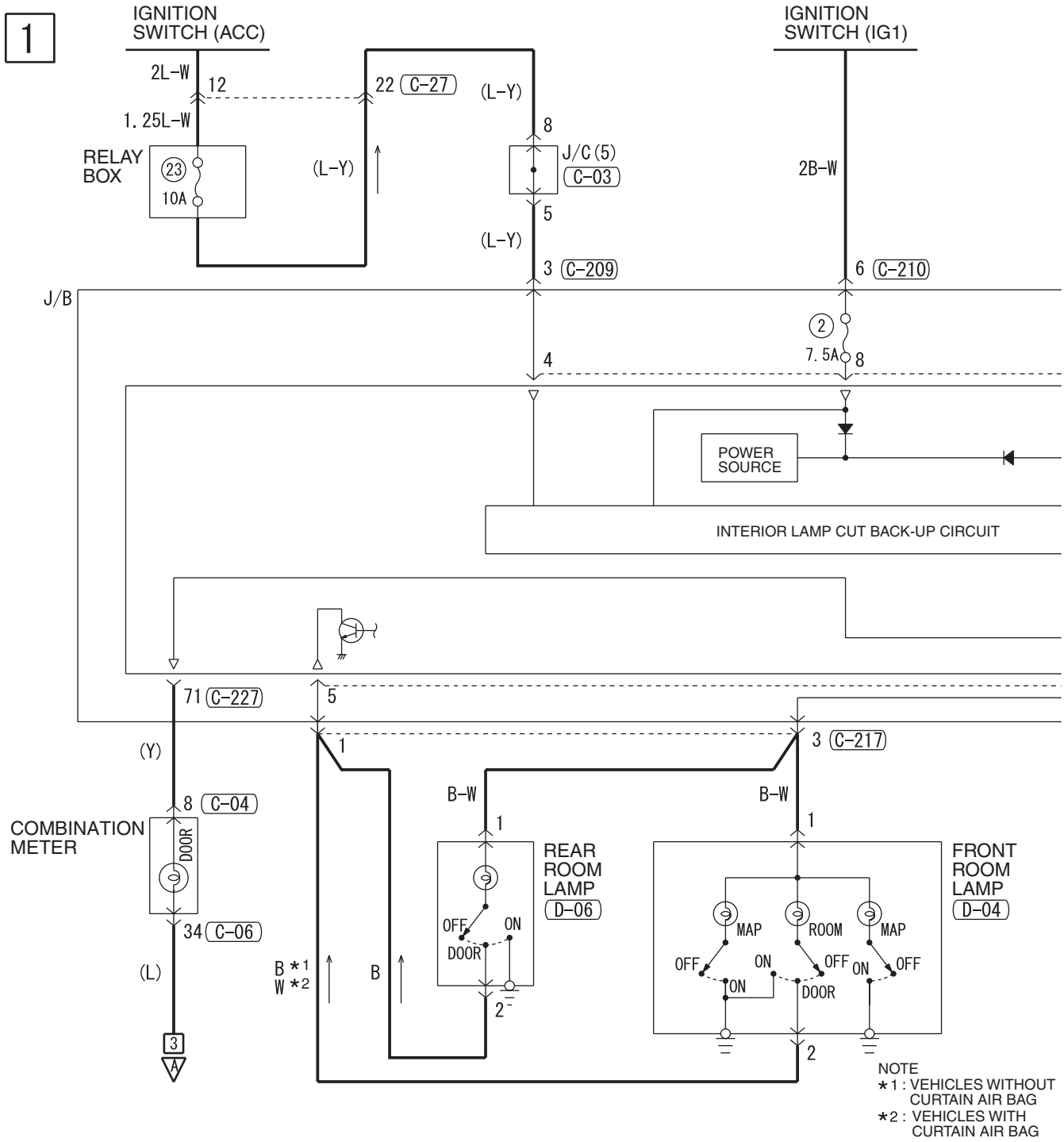

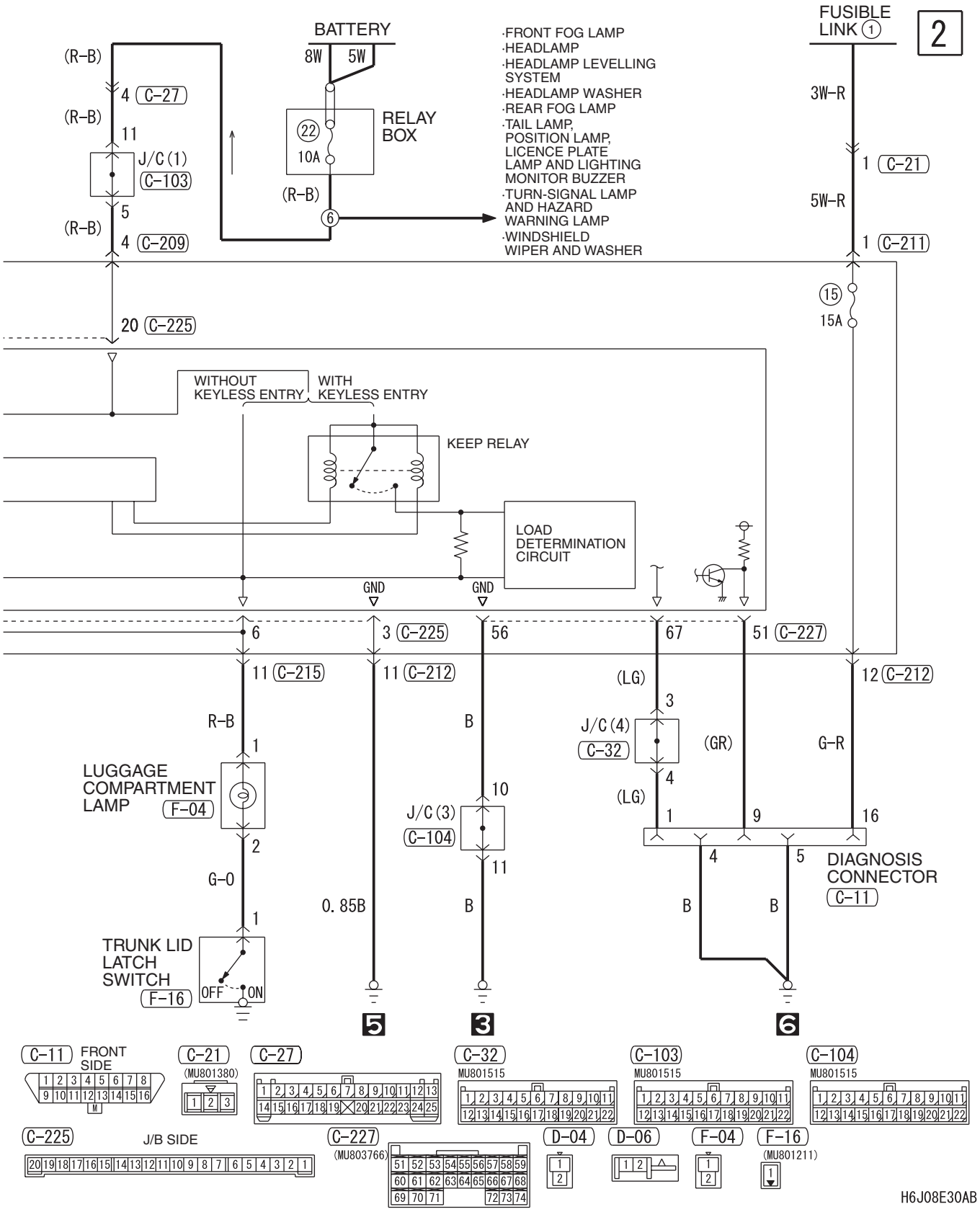
BATTERY
8W
5W
RELAY BOX
22
10A
(R-B)
6
·FRONT FOG LAMP
·HEADLAMP
·HEADLAMP LEVELLING SYSTEM
·HEADLAMP WASHER
·REAR FOG LAMP
·TAIL LAMP, POSITION LAMP, LICENCE PLATE LAMP AND LIGHTING MONITOR BUZZER
·TURN-SIGNAL LAMP AND HAZARD WARNING LAMP
·WINDSHIELD WIPER AND WASHER
FUSIBLE LINK 1
2
3W-R
5W-R
1 C-21
1 C-211
15
15A
(R-B)
4 C-27
11
J/C (1)
C-103
5
4 C-209
20 C-225
WITHOUT KEYLESS ENTRY
WITH KEYLESS ENTRY
KEEP RELAY
LOAD DETERMINATION CIRCUIT
GND
GND
6
3 C-225
56
67
51 C-227
11 C-215
11 C-212
12 C-212
R-B
1
LUGGAGE COMPARTMENT LAMP
F-04
2
G-O
1
TRUNK LID LATCH SWITCH
F-16
OFF
ON
0.85B
B
10
J/C (3)
C-104
11
B
(LG)
3
J/C (4)
C-32
4
(LG)
(GR)
G-R
1
9
16
4
5
B
B
DIAGNOSIS CONNECTOR
C-11
5
3
6
C-11 FRONT SIDE
C-21 (MU801380)
C-27
C-32 MU801515
C-103 MU801515
C-104 MU801515
C-225 J/B SIDE
C-227 (MU803766)
D-04
D-06
F-04
F-16 (MU801211)
H6J08E30AB

ROOM LAMP AND LUGGAGE COMPARTMENT LAMP <SEDAN (LHD)> (CONTINUED)

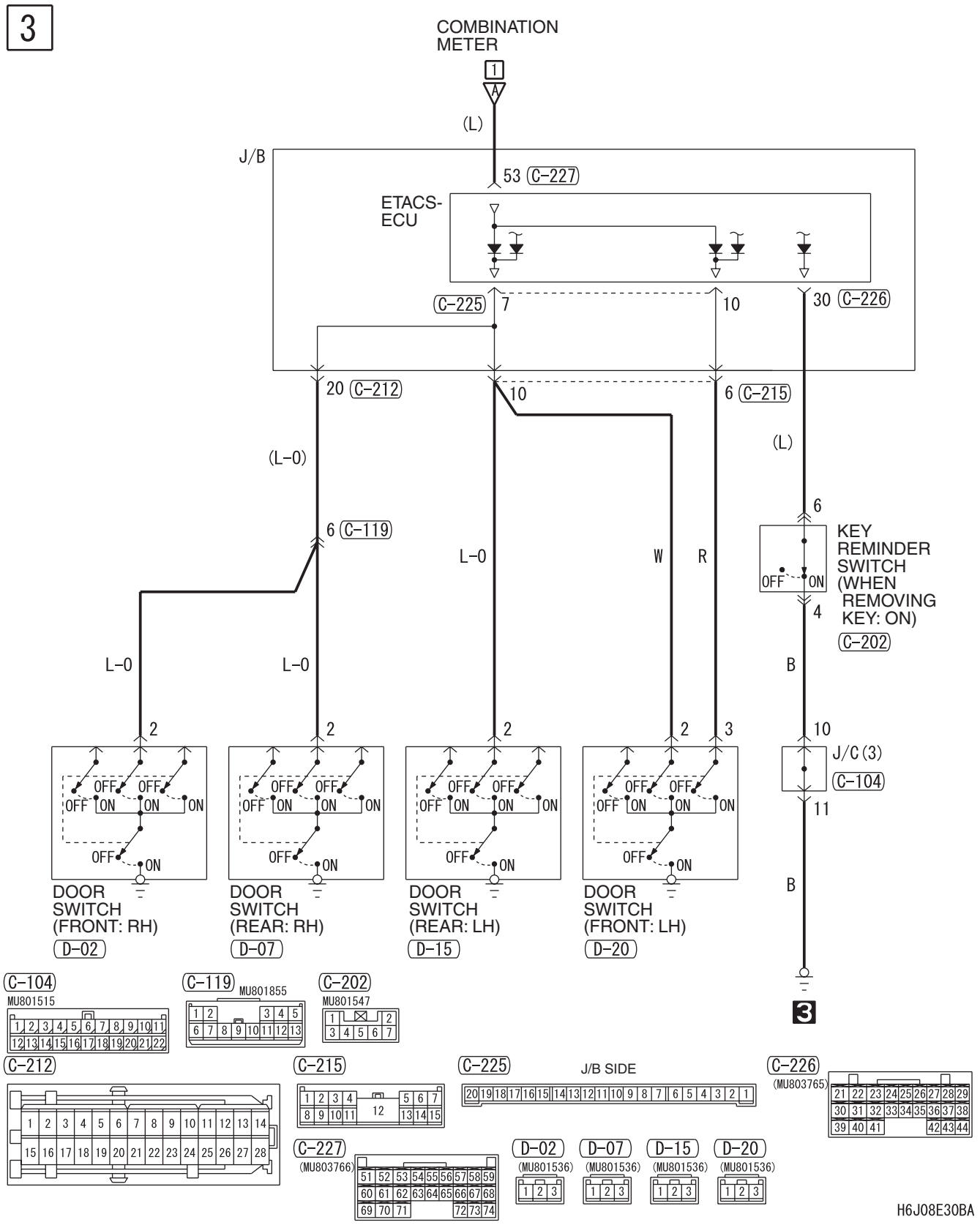

NOTES

ROOM LAMP AND LUGGAGE COMPARTMENT LAMP <SEDAN (RHD)>

M1901017800329

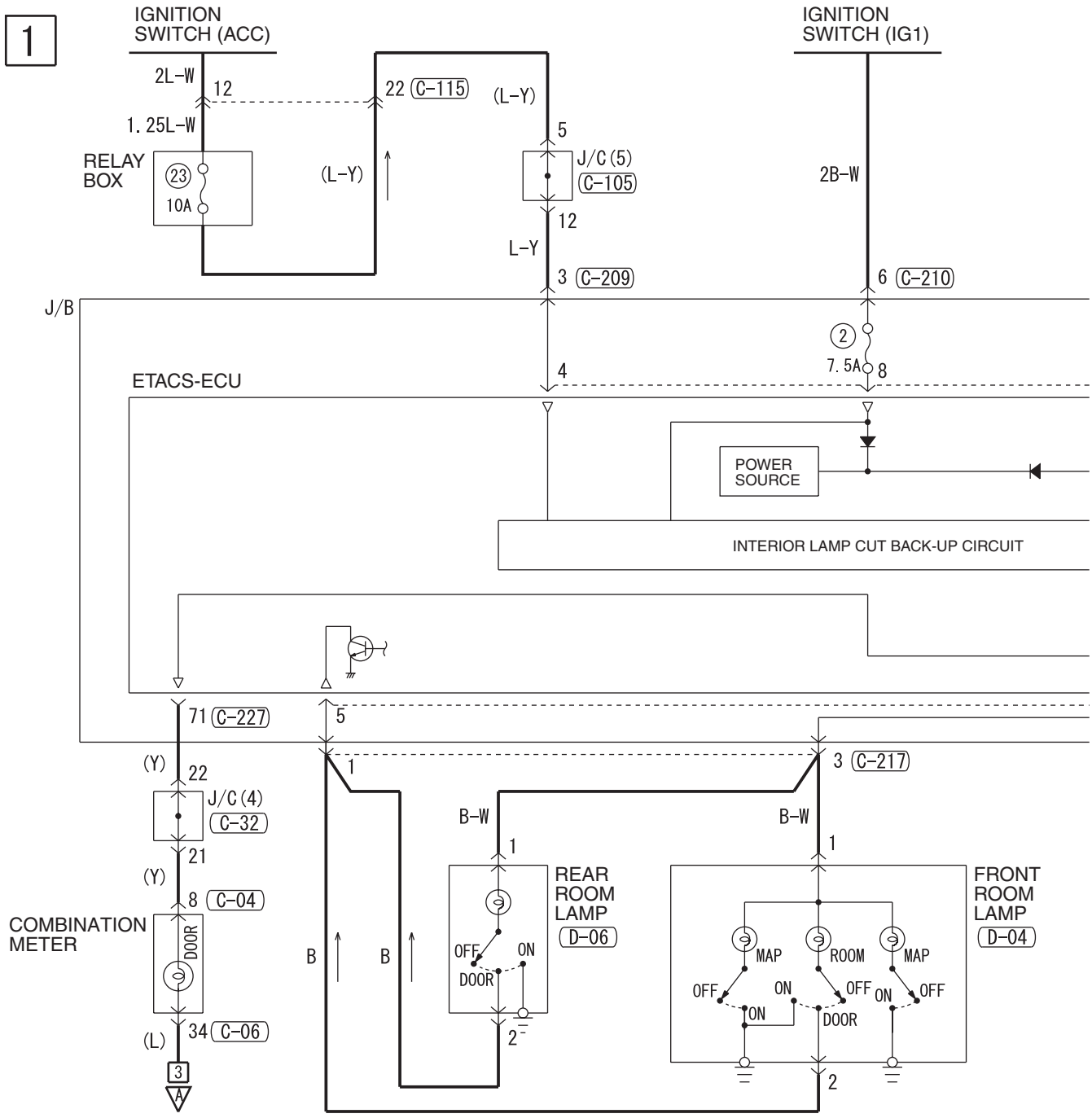

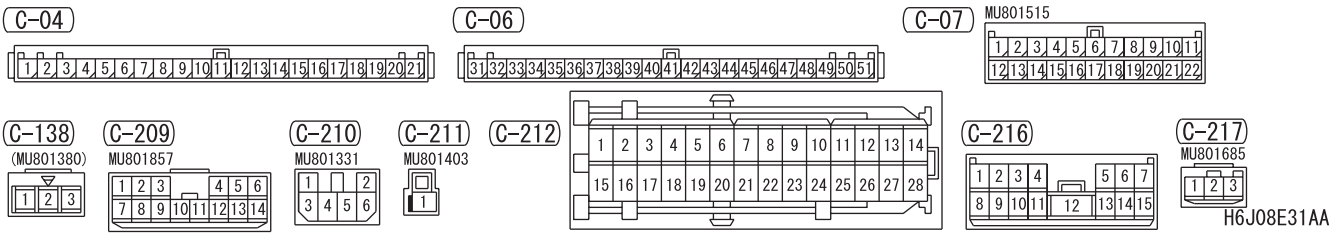

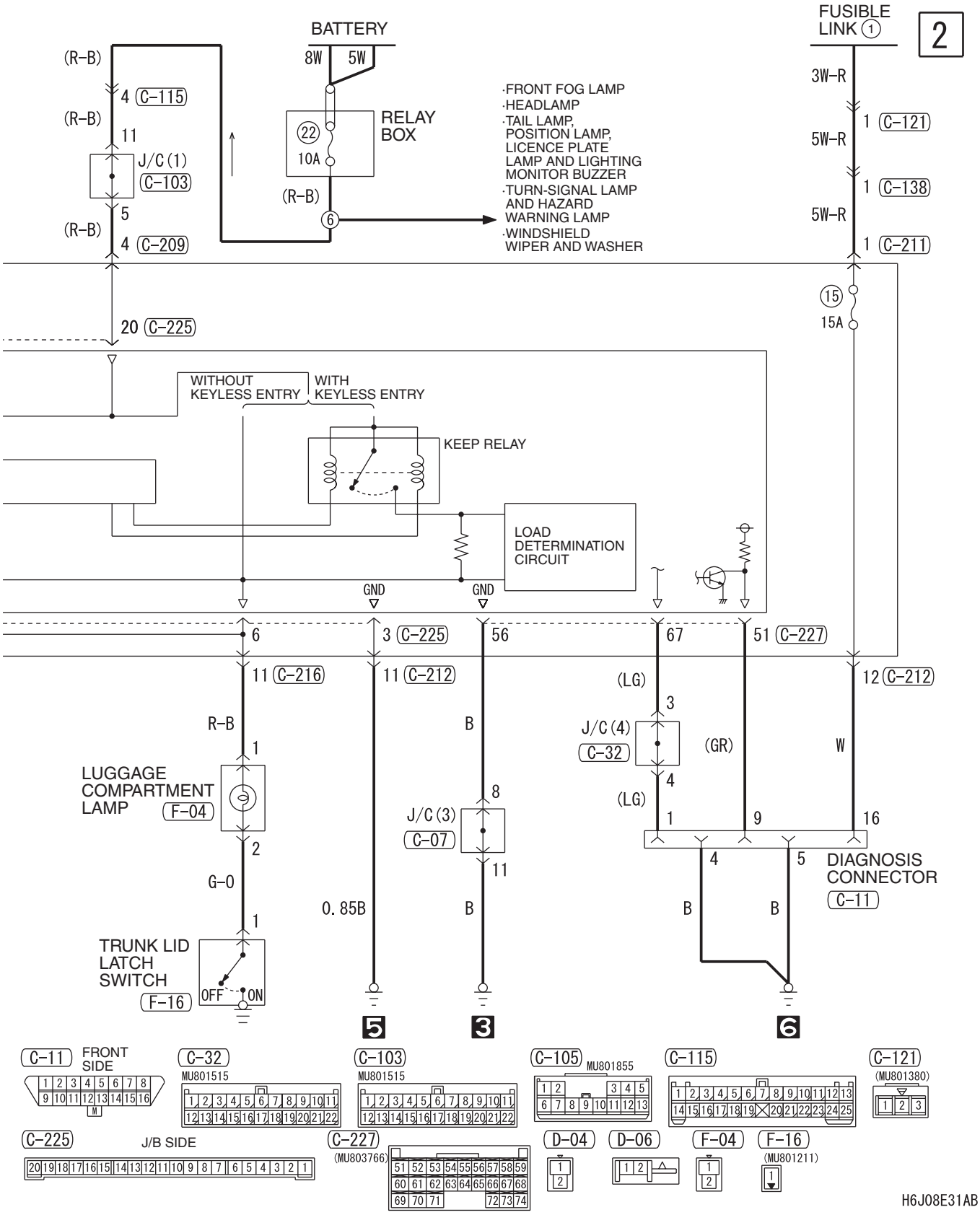
BATTERY
8W
5W
RELAY BOX
22
10A
(R-B)
6
·FRONT FOG LAMP
·HEADLAMP
·TAIL LAMP, POSITION LAMP, LICENCE PLATE LAMP AND LIGHTING MONITOR BUZZER
·TURN-SIGNAL LAMP AND HAZARD WARNING LAMP
·WINDSHIELD WIPER AND WASHER
FUSIBLE LINK 1
2
3W-R
1 C-121
5W-R
1 C-138
5W-R
1 C-211
15
15A
(R-B)
4 C-115
11
J/C (1)
C-103
5
4 C-209
20 C-225
WITHOUT KEYLESS ENTRY
WITH KEYLESS ENTRY
KEEP RELAY
LOAD DETERMINATION CIRCUIT
GND
GND
6
3 C-225
56
67
51 C-227
11 C-216
11 C-212
12 C-212
R-B
1
LUGGAGE COMPARTMENT LAMP
F-04
2
G-O
1
TRUNK LID LATCH SWITCH
F-16
OFF
ON
0.85B
B
(LG)
3
J/C (4)
C-32
4
(LG)
B
8
J/C (3)
C-07
11
B
(GR)
W
1
9
16
4
5
B
B
DIAGNOSIS CONNECTOR
C-11
5
3
6
C-11 FRONT SIDE
C-32
MU801515
C-103
MU801515
C-105
MU801855
C-115
C-121
(MU801380)
C-225
J/B SIDE
C-227
(MU803766)
D-04
D-06
F-04
F-16
(MU801211)
H6J08E31AB

ROOM LAMP AND LUGGAGE COMPARTMENT LAMP <SEDAN (RHD)> (CONTINUED)

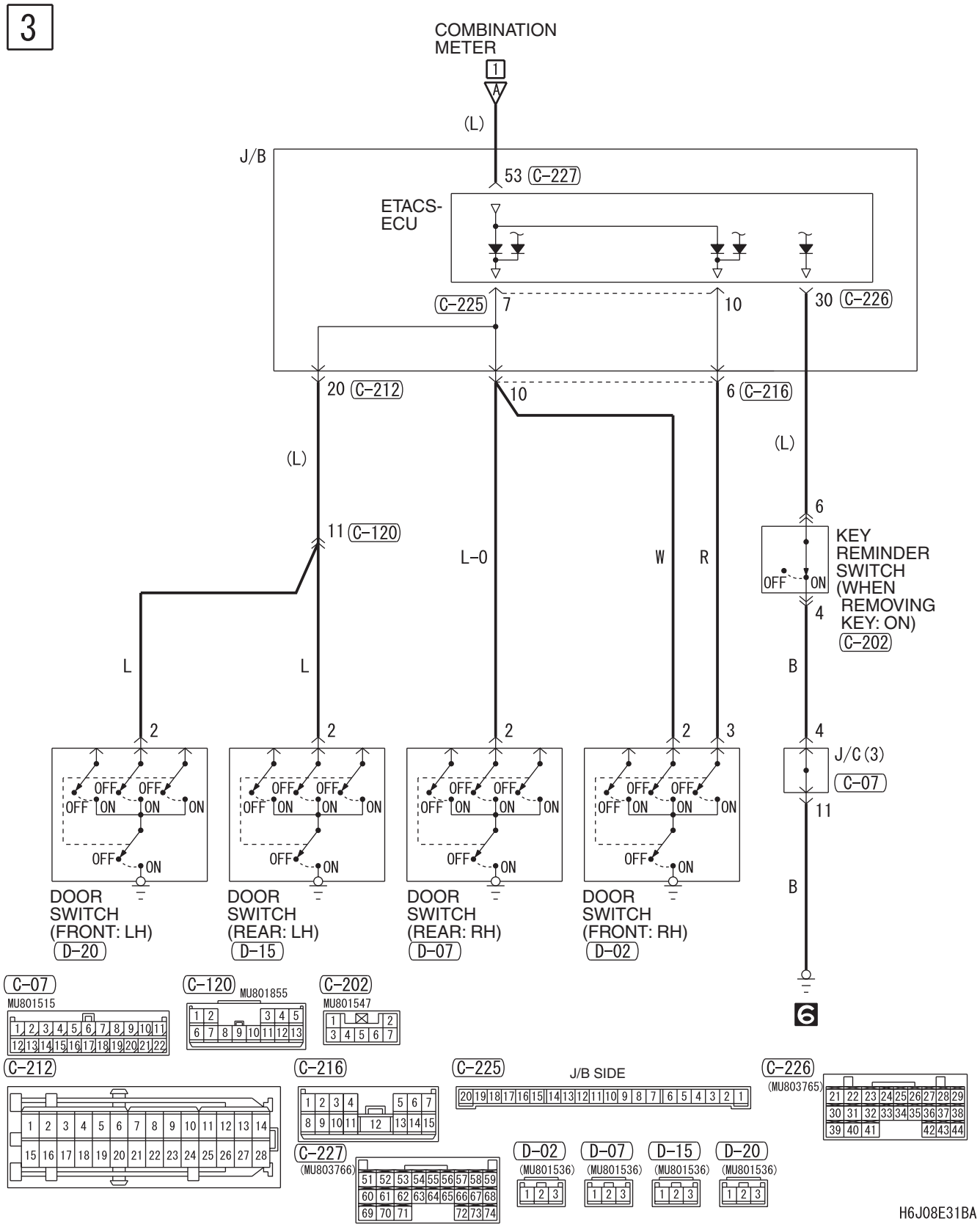

NOTES

ROOM LAMP, PERSONAL LAMP AND LUGGAGE ROOM LAMP

ROOM LAMP, PERSONAL LAMP AND LUGGAGE ROOM LAMP <WAGON (LHD)>

M1901017900155

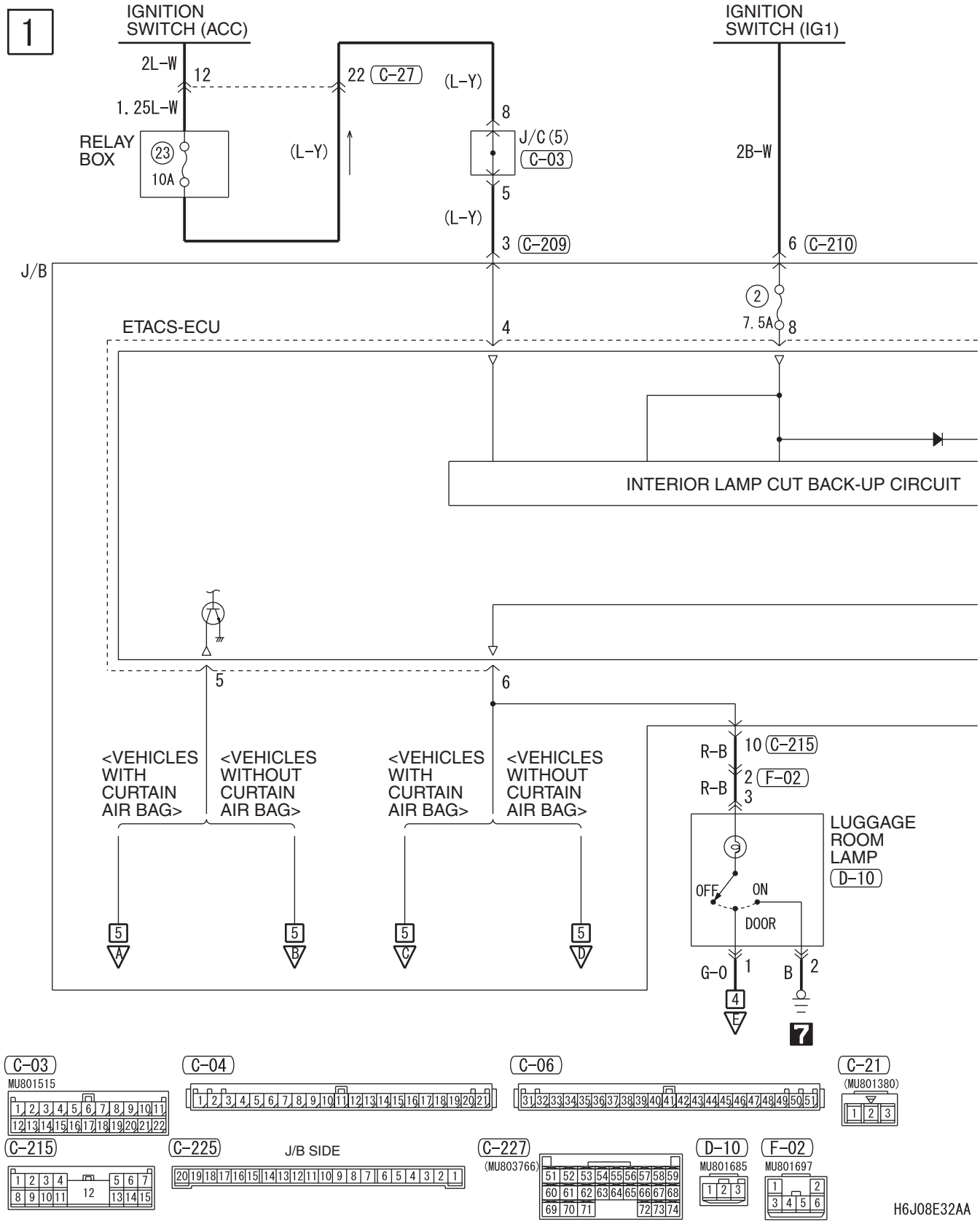

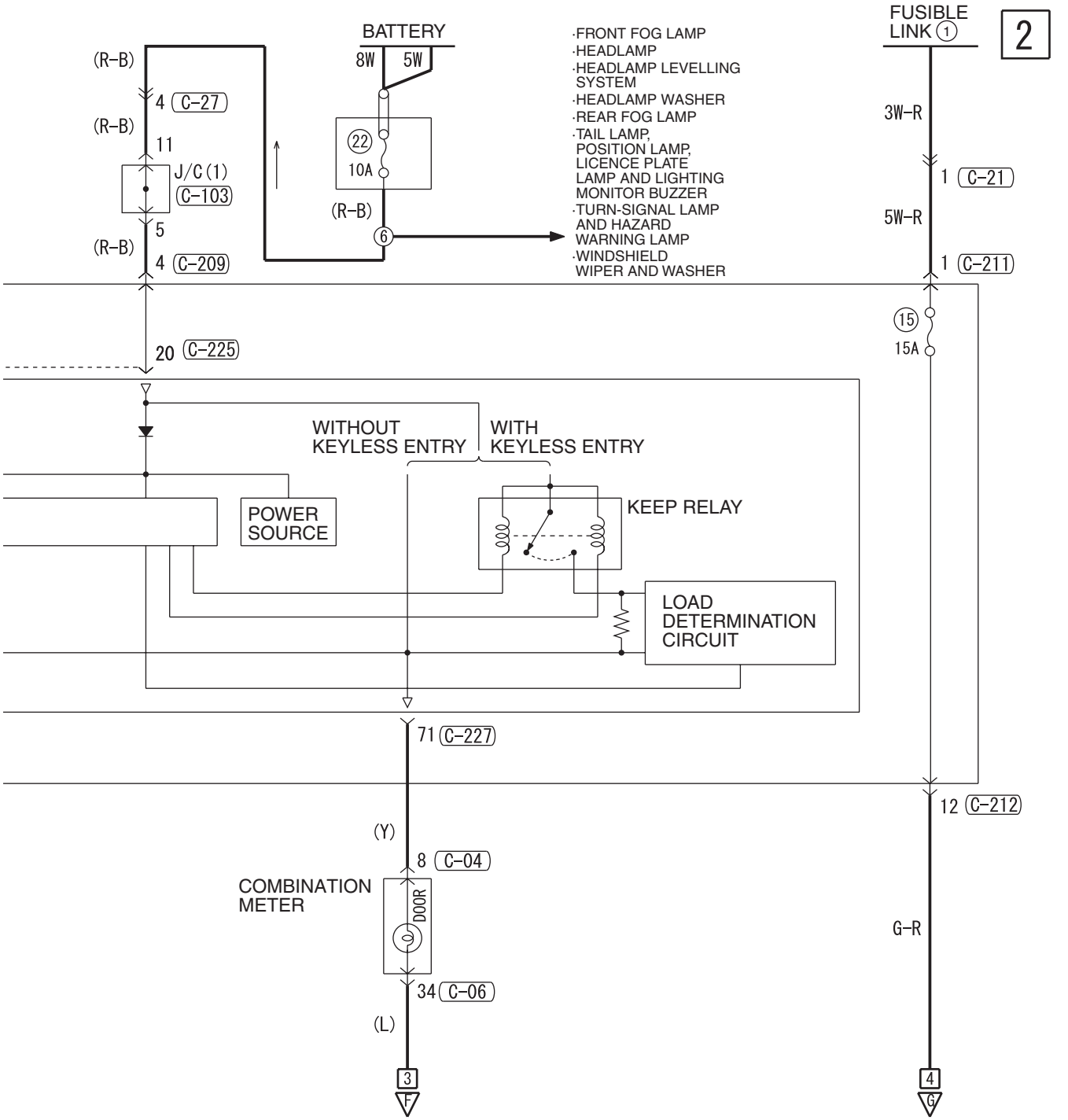

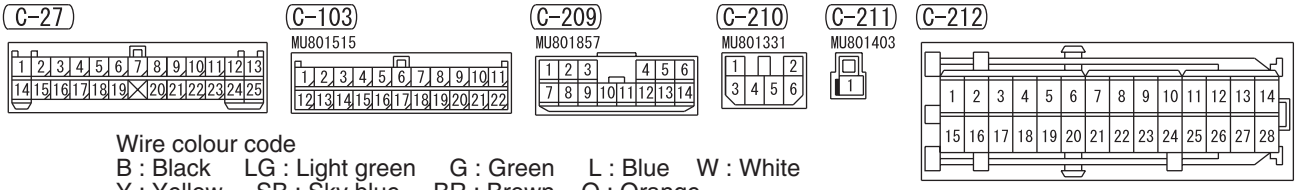

Wire colour code
B : Black LG : Light green G : Green L : Blue W : White
Y : Yellow SB : Sky blue BR : Brown O : Orange
GR : Grey R : Red P : Pink V : Violet PU : Purple

H6J08E32AB

ROOM LAMP, PERSONAL LAMP AND LUGGAGE ROOM LAMP <WAGON (LHD)> (CONTINUED)

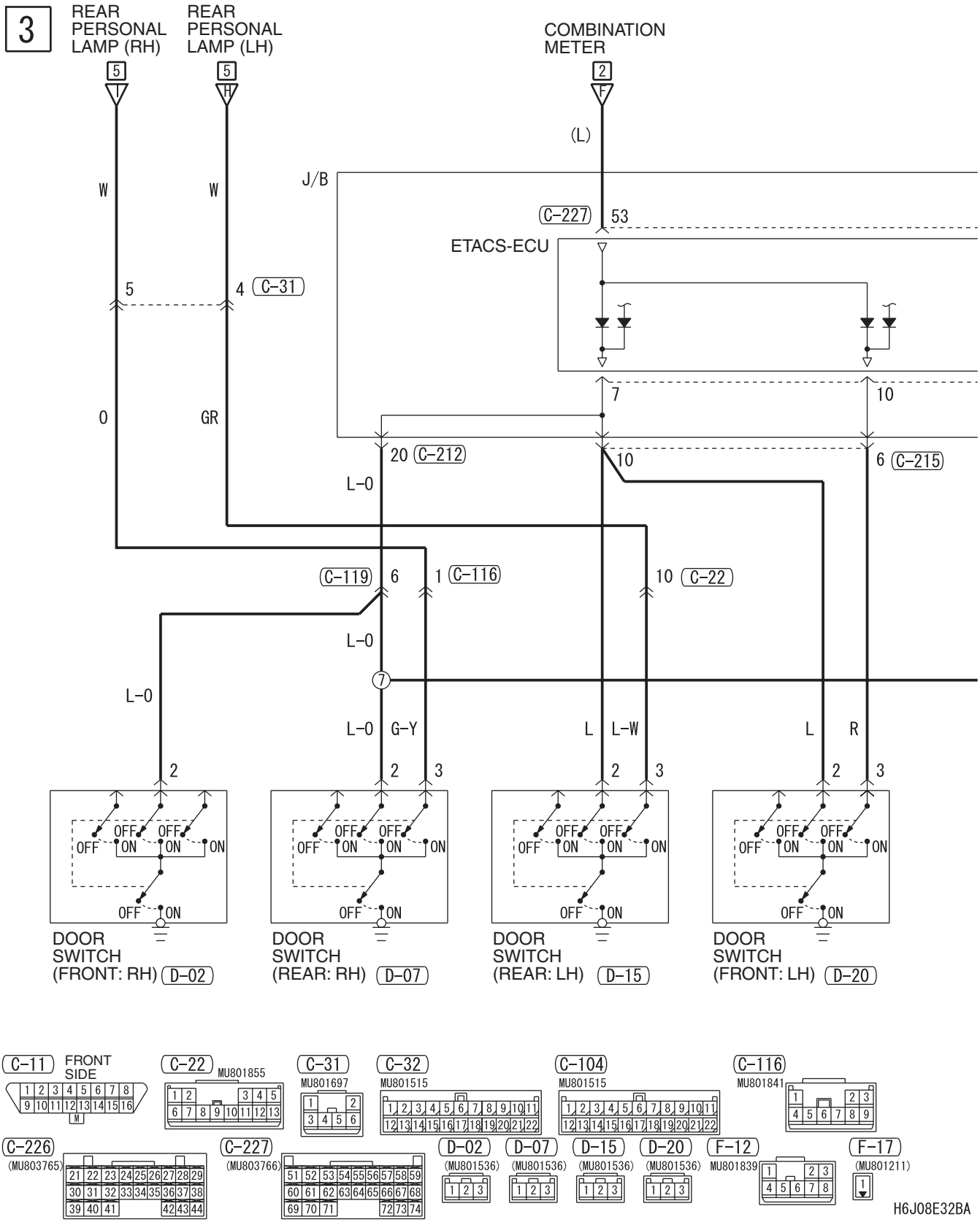

4

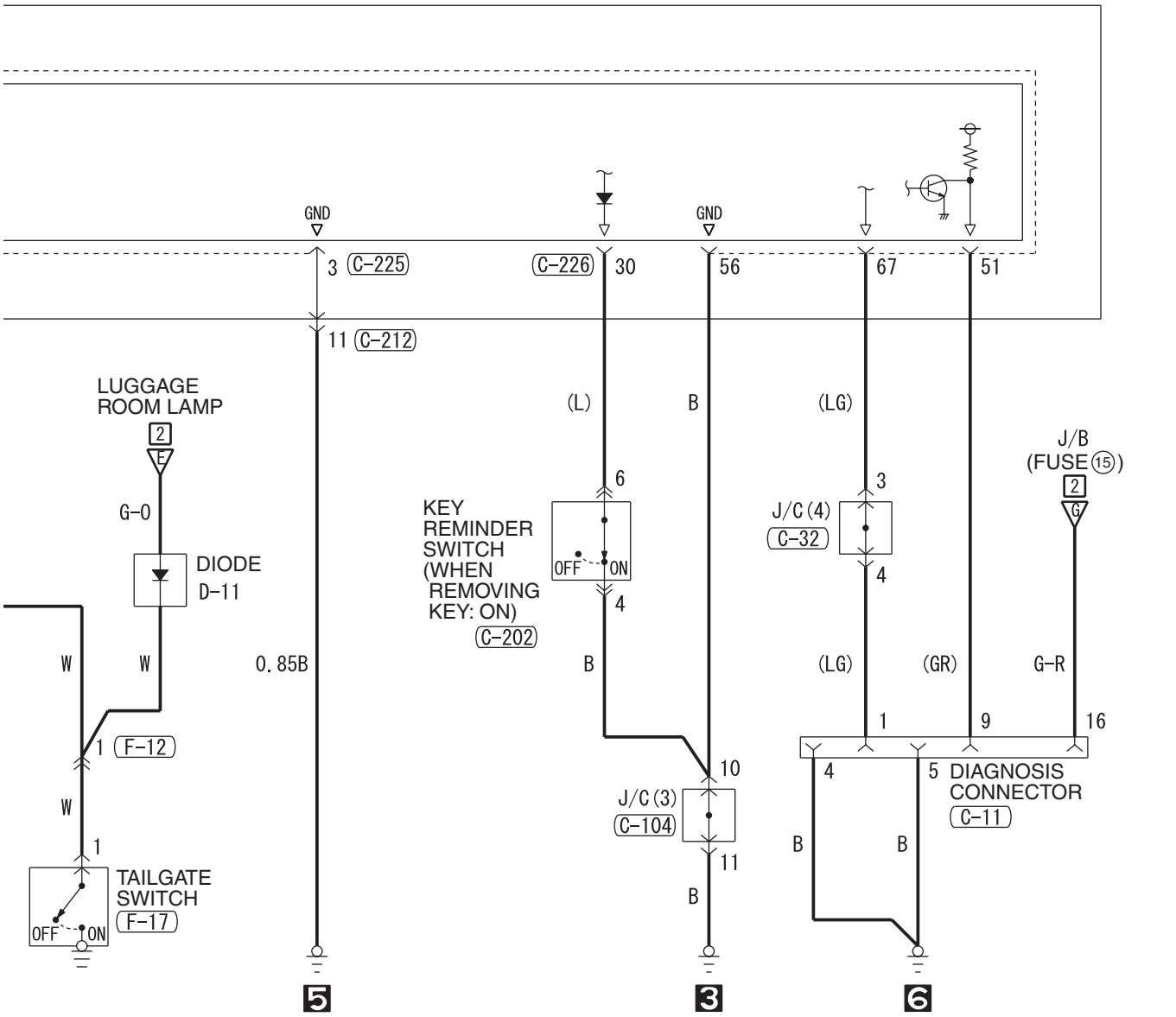

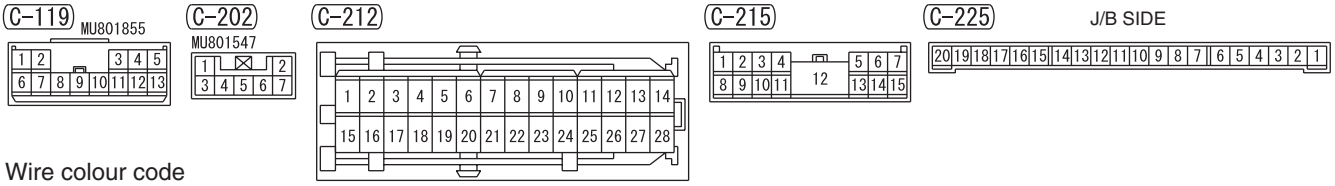

Wire colour code
B : Black LG : Light green G : Green L : Blue W : White Y : Yellow SB : Sky blue
BR : Brown O : Orange GR : Grey R : Red P : Pink V : Violet PU : Purple

H6J08E32BB

ROOM LAMP, PERSONAL LAMP AND LUGGAGE ROOM LAMP <WAGON (LHD)> (CONTINUED)

5

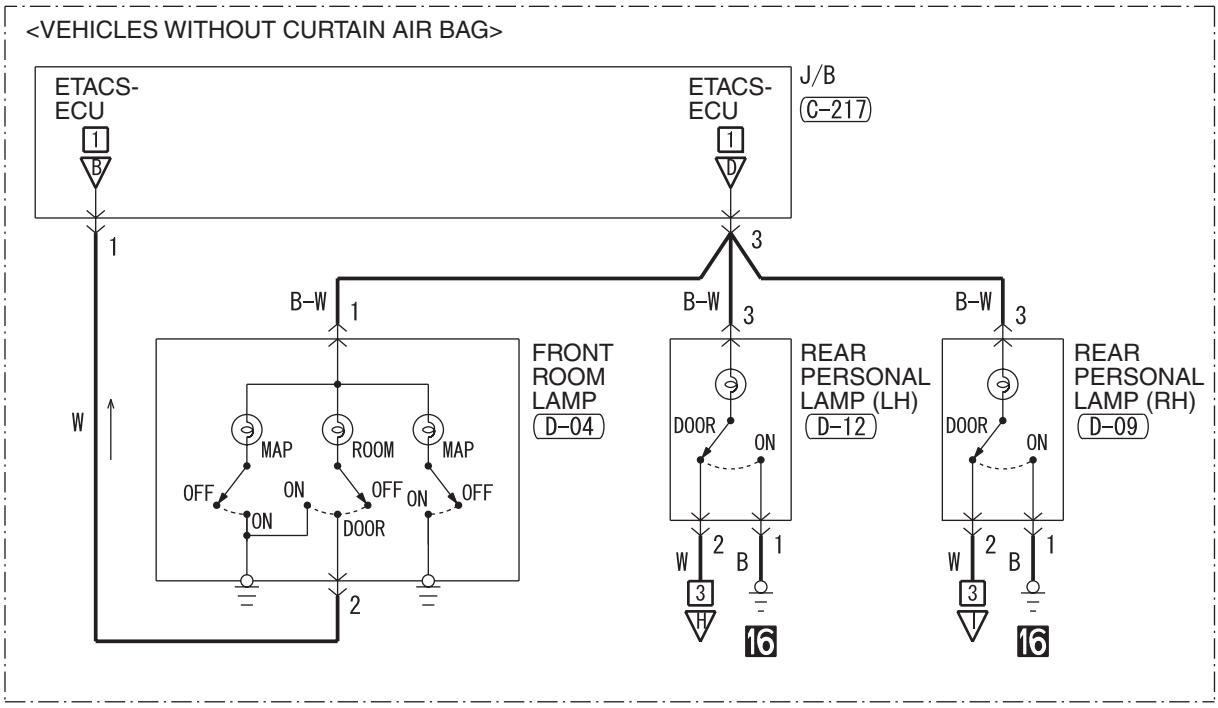

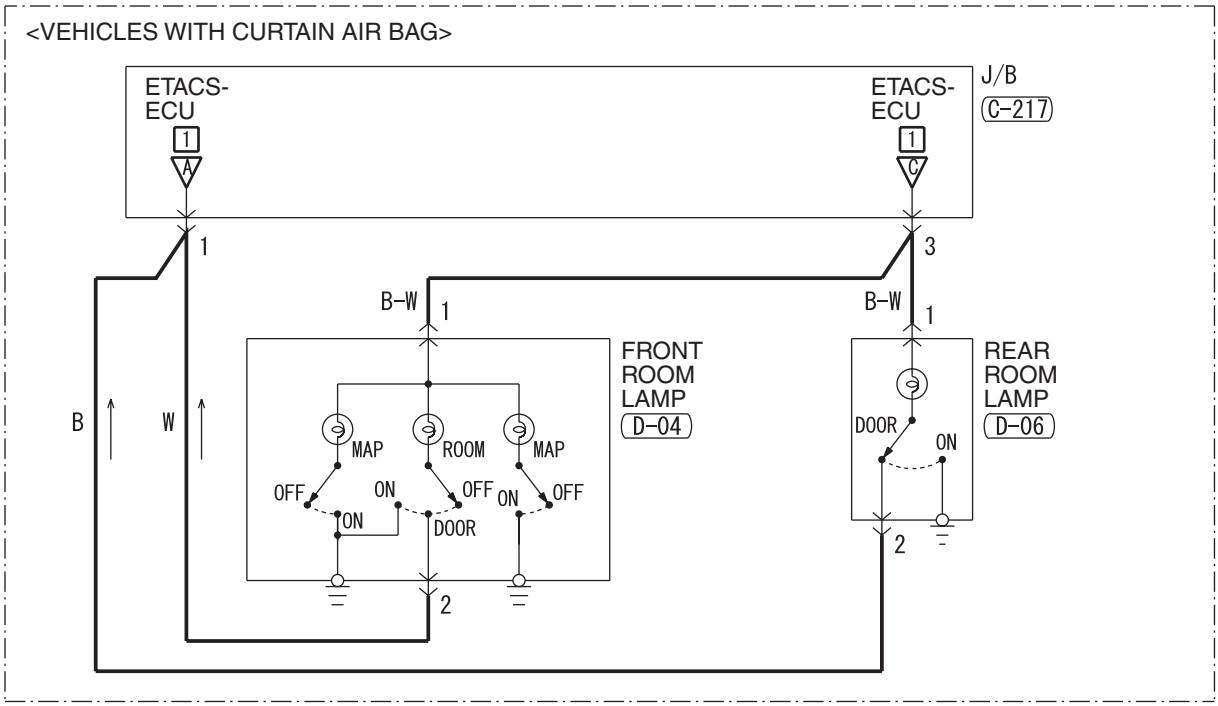

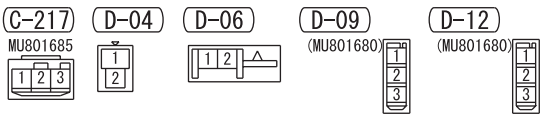

Wire colour code
B : Black LG : Light green G : Green L : Blue W : White Y : Yellow SB : Sky blue
BR : Brown O : Orange GR : Grey R : Red P : Pink V : Violet PU : Purple

H6J08E32CA

NOTES

ROOM LAMP, PERSONAL LAMP AND LUGGAGE ROOM LAMP <WAGON (RHD)>

M1901017900166

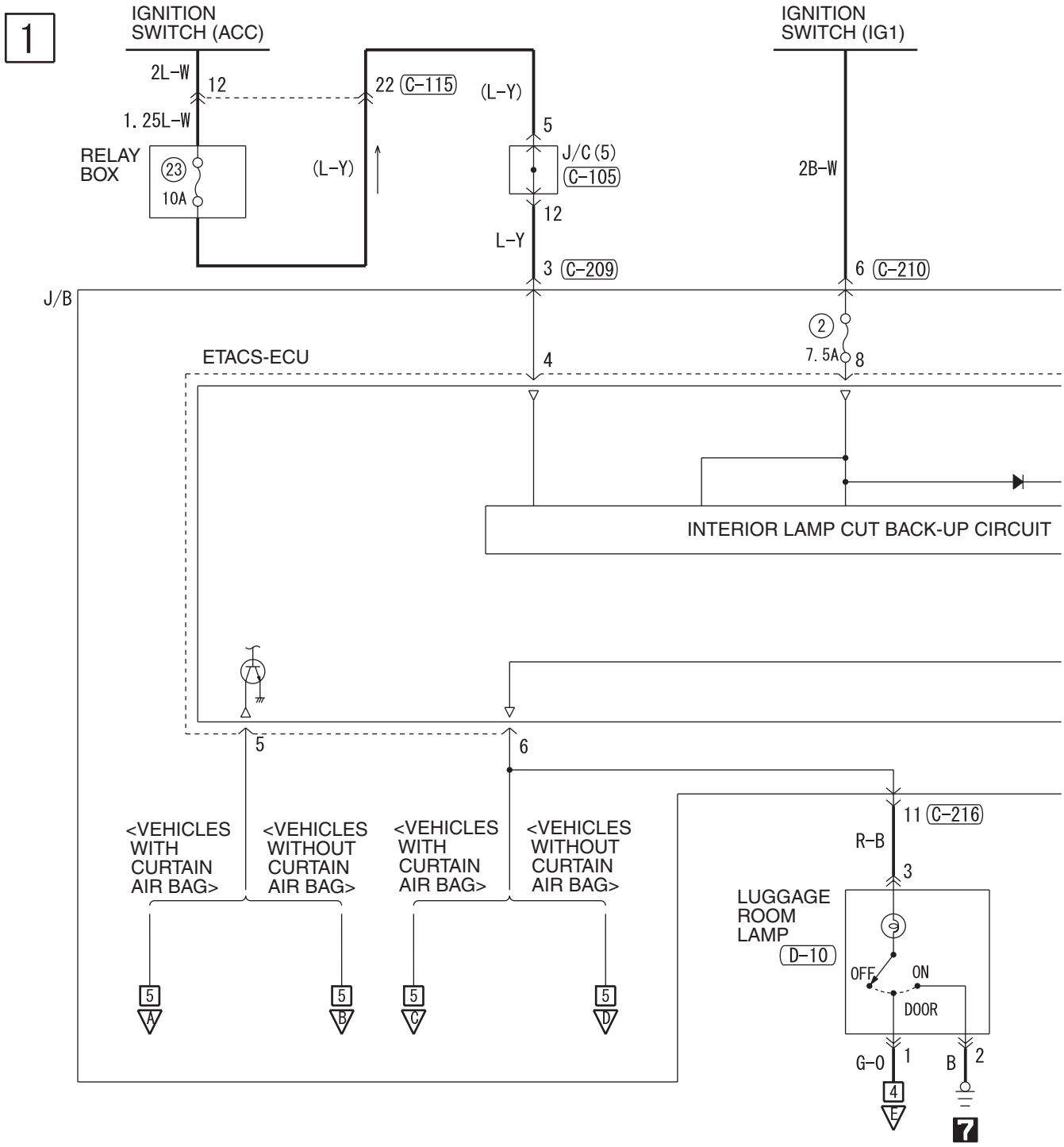

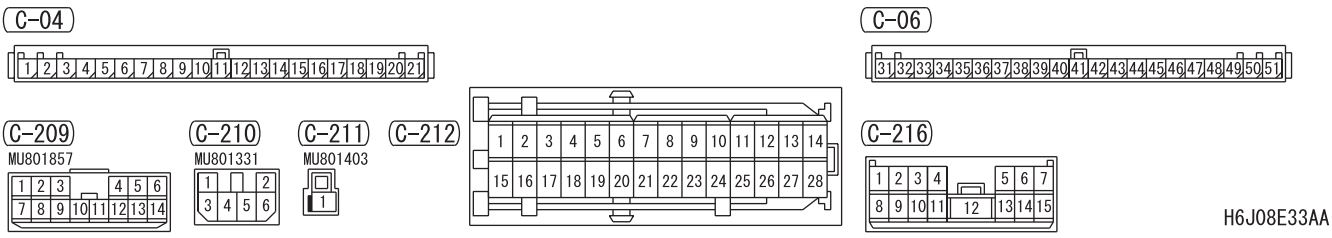

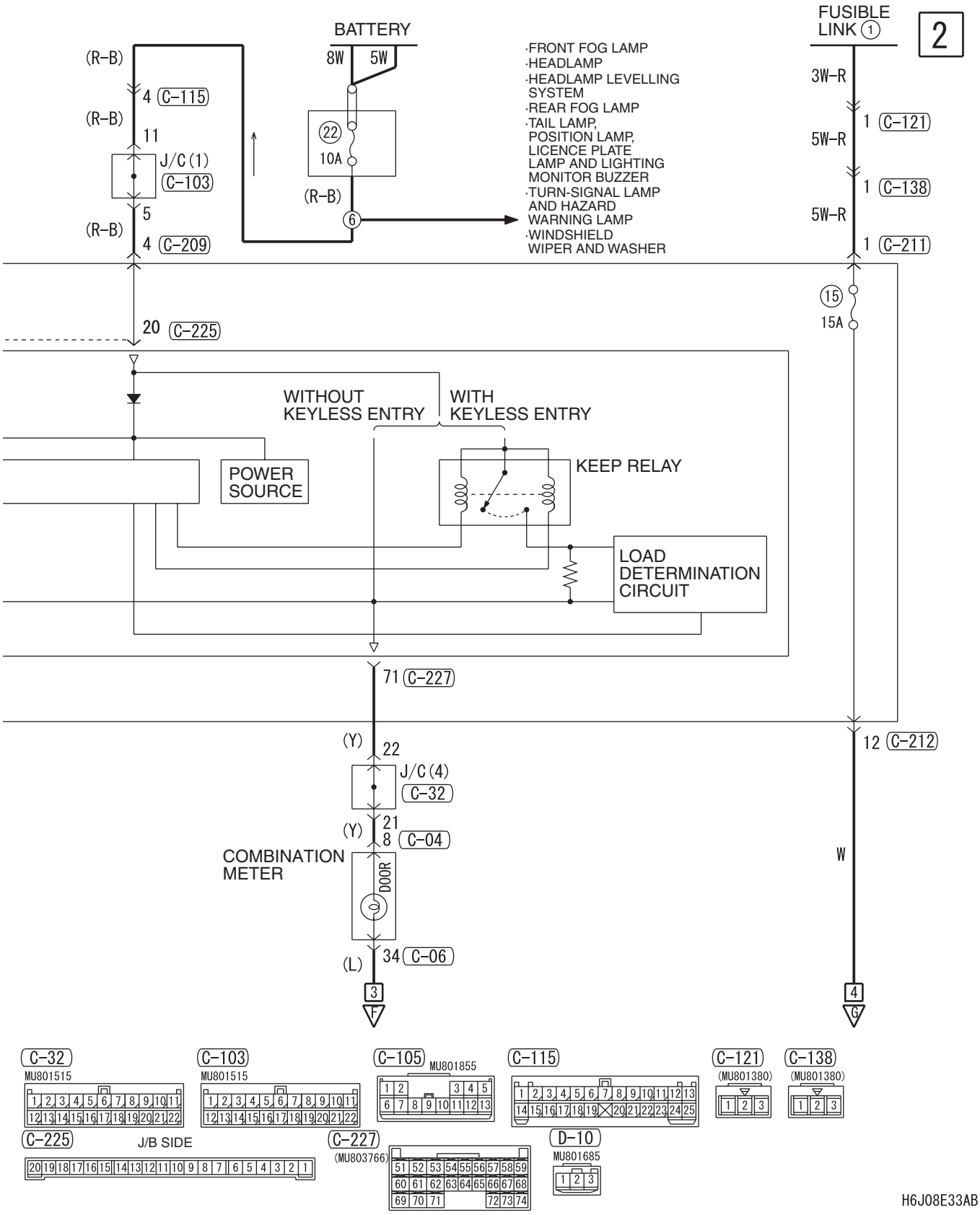
BATTERY
8W
5W
(R-B)
4 (C-115)
(R-B)
11
J/C (1)
(C-103)
5
(R-B)
4 (C-209)
22
10A
(R-B)
6
·FRONT FOG LAMP
·HEADLAMP
·HEADLAMP LEVELLING SYSTEM
·REAR FOG LAMP
·TAIL LAMP, POSITION LAMP, LICENCE PLATE LAMP AND LIGHTING MONITOR BUZZER
·TURN-SIGNAL LAMP AND HAZARD WARNING LAMP
·WINDSHIELD WIPER AND WASHER
FUSIBLE LINK 1
2
3W-R
1 (C-121)
5W-R
1 (C-138)
5W-R
1 (C-211)
15
15A
20 (C-225)
WITHOUT KEYLESS ENTRY
WITH KEYLESS ENTRY
POWER SOURCE
KEEP RELAY
LOAD DETERMINATION CIRCUIT
71 (C-227)
(Y)
22
J/C (4)
(C-32)
(Y)
21
8 (C-04)
COMBINATION METER
DOOR
34 (C-06)
(L)
3
F
12 (C-212)
W
4
G
C-32
MU801515
C-103
MU801515
C-105
MU801855
C-115
C-121
(MU801380)
C-138
(MU801380)
C-225
J/B SIDE
C-227
(MU803766)
D-10
MU801685
H6J08E33AB

ROOM LAMP, PERSONAL LAMP AND LUGGAGE ROOM LAMP <WAGON (RHD)> (CONTINUED)

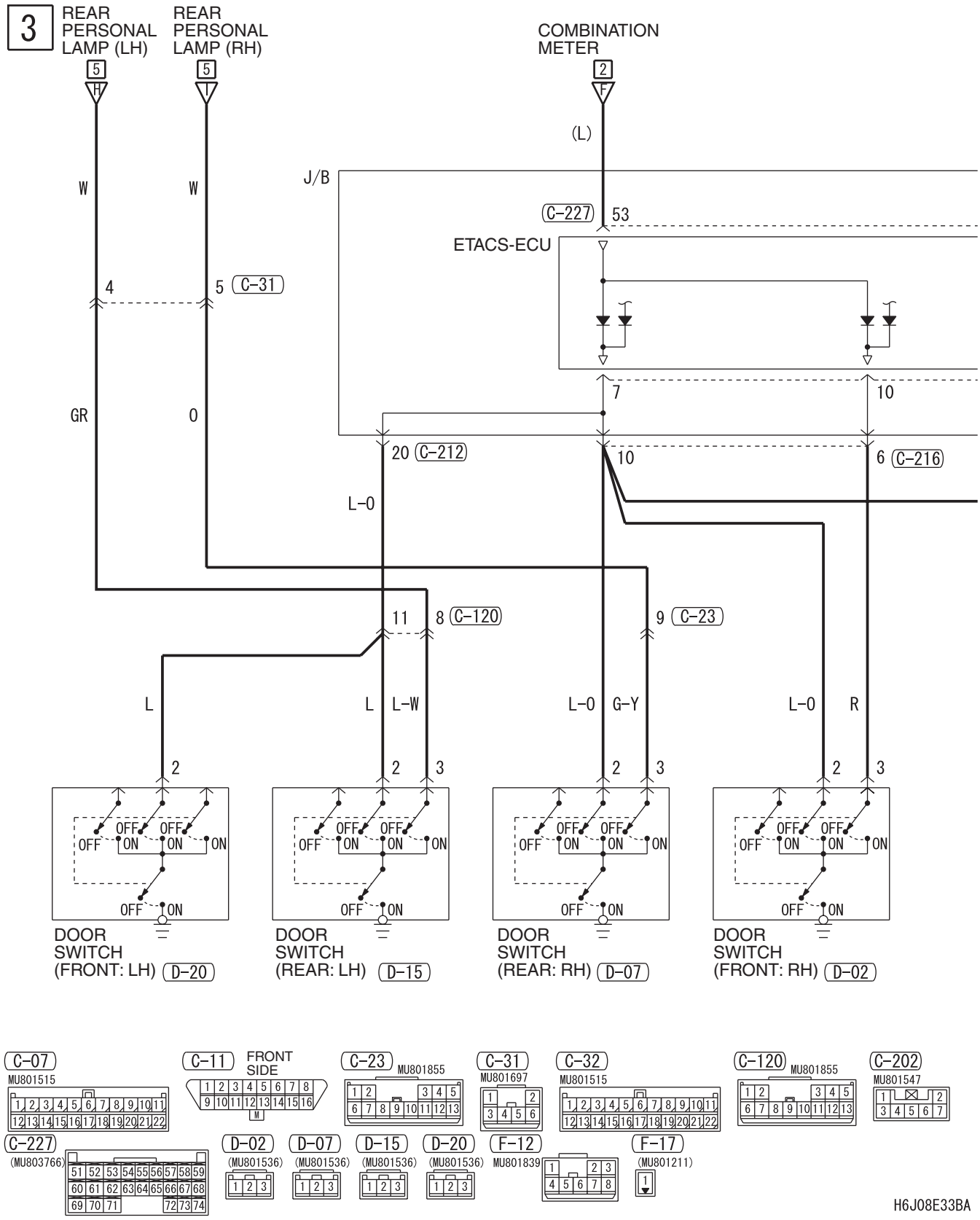

4

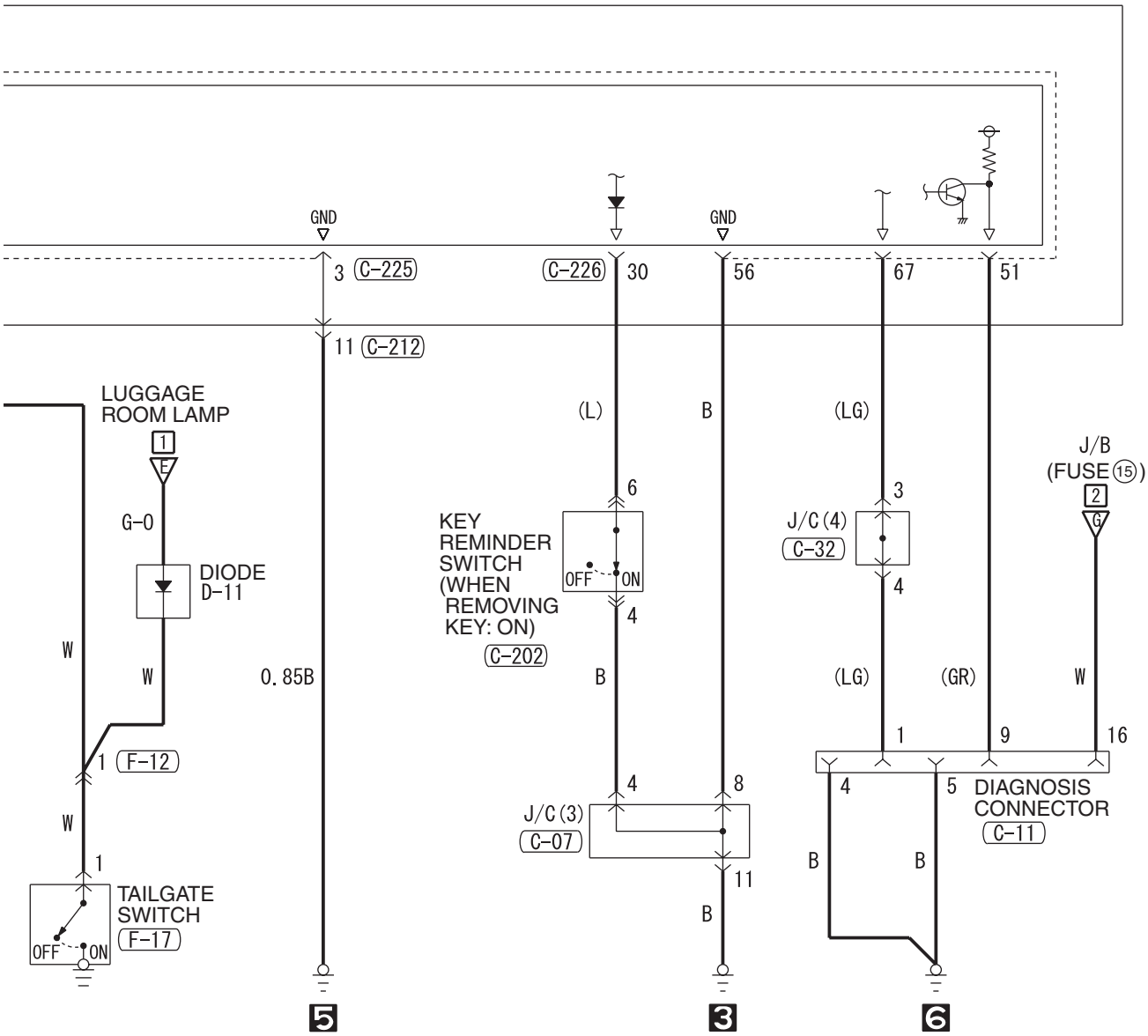

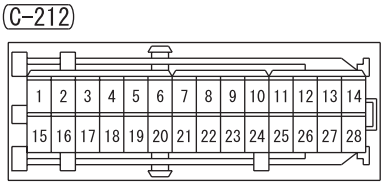

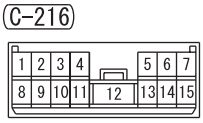

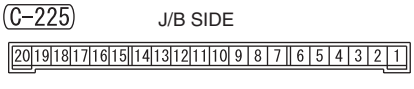

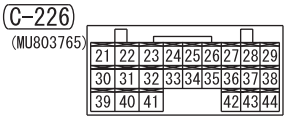

Wire colour code
B : Black LG : Light green G : Green L : Blue W : White
Y : Yellow SB : Sky blue BR : Brown O : Orange
GR : Grey R : Red P : Pink V : Violet PU : Purple

H6J08E33BB

ROOM LAMP, PERSONAL LAMP AND LUGGAGE ROOM LAMP <WAGON (RHD)> (CONTINUED)

5

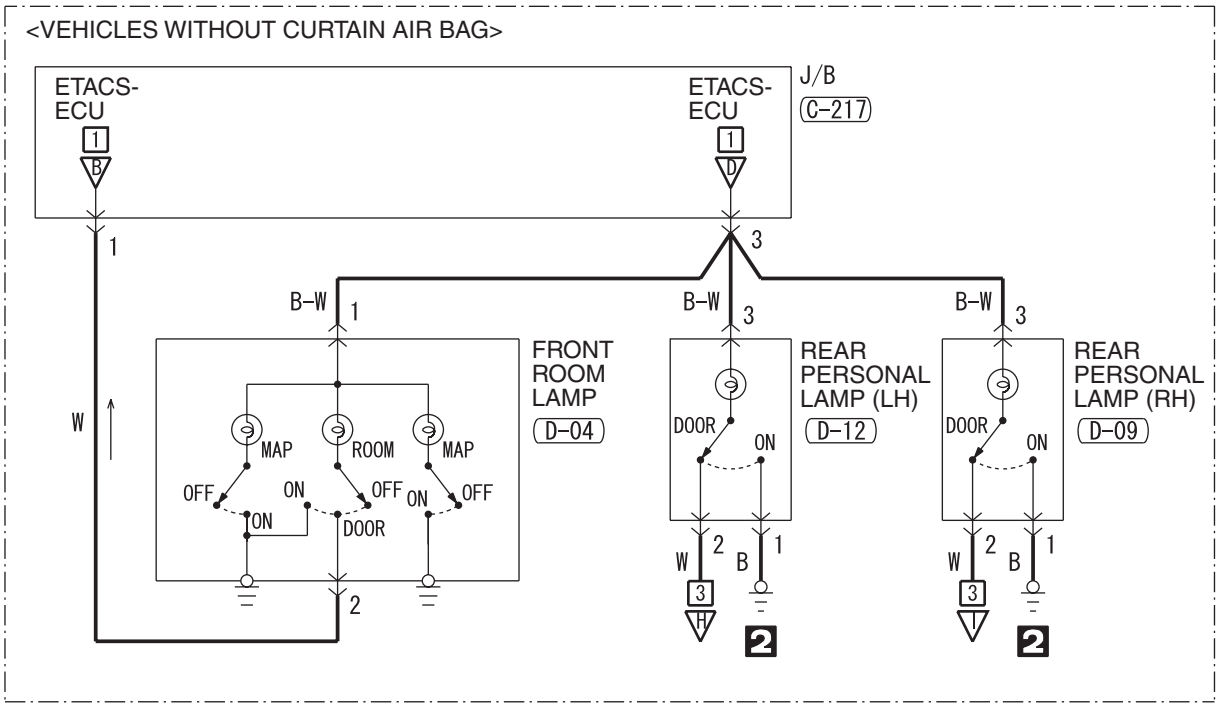

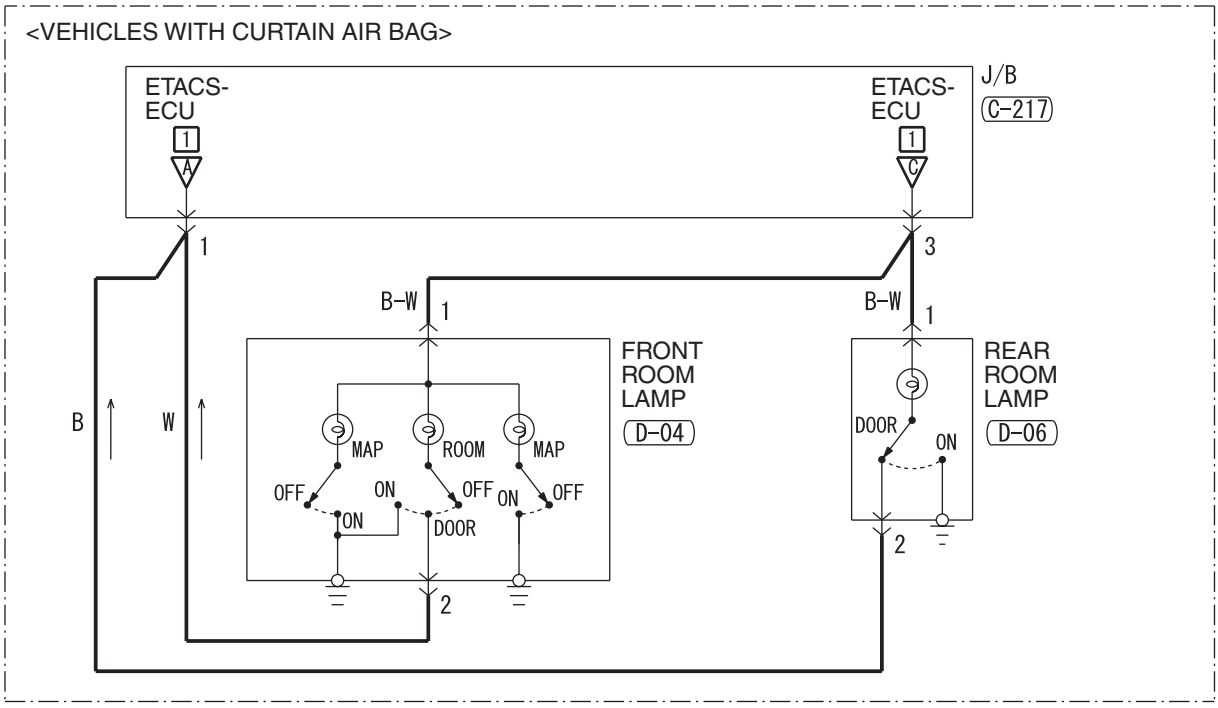

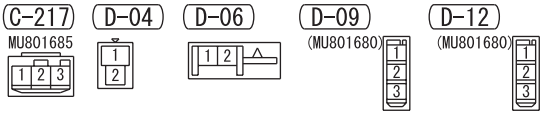

Wire colour code
B : Black LG : Light green G : Green L : Blue W : White Y : Yellow SB : Sky blue
BR : Brown O : Orange GR : Grey R : Red P : Pink V : Violet PU : Purple

H6J08E33CA

NOTES

REAR FOG LAMP

REAR FOG LAMP <LHD>

M1901012000618

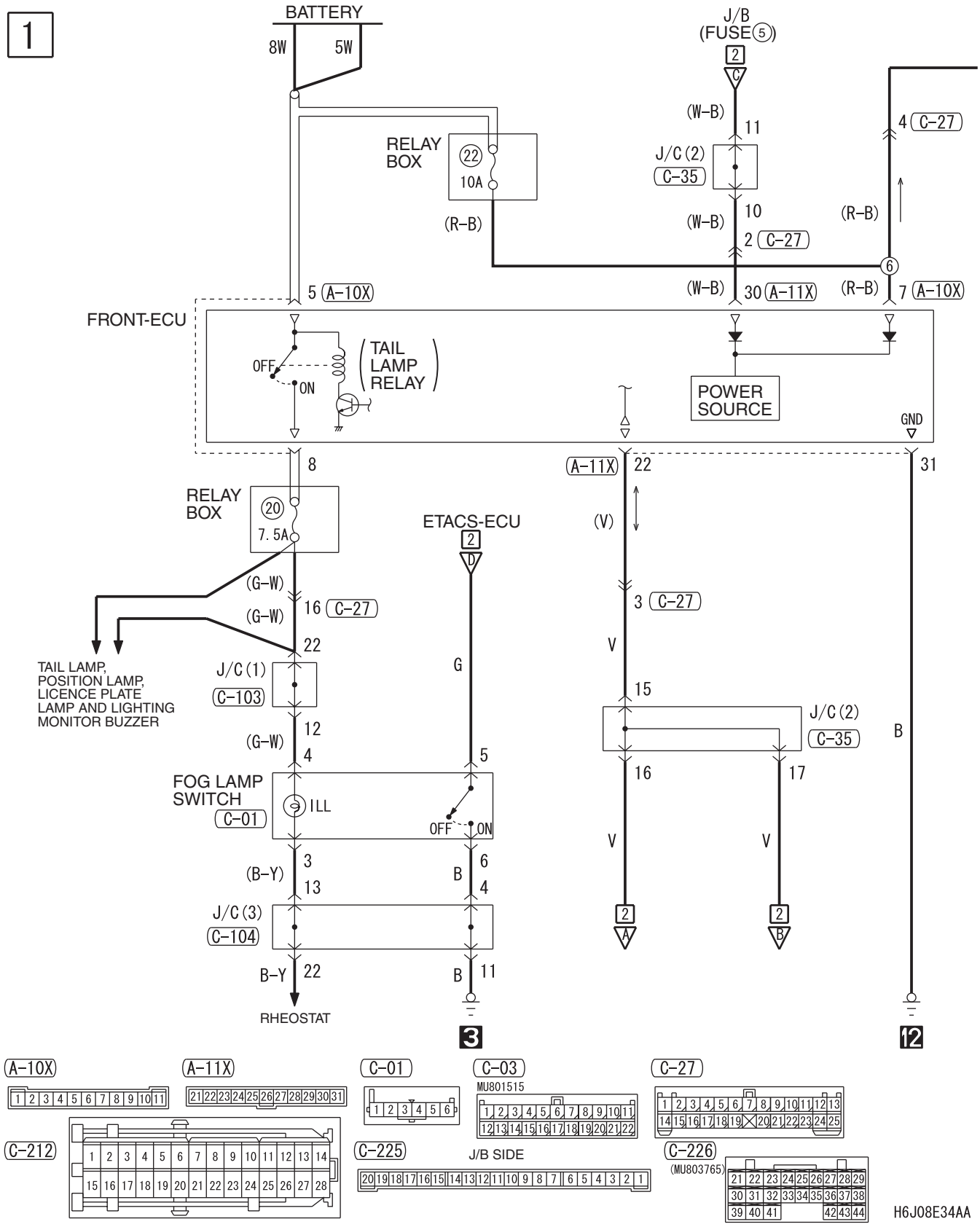

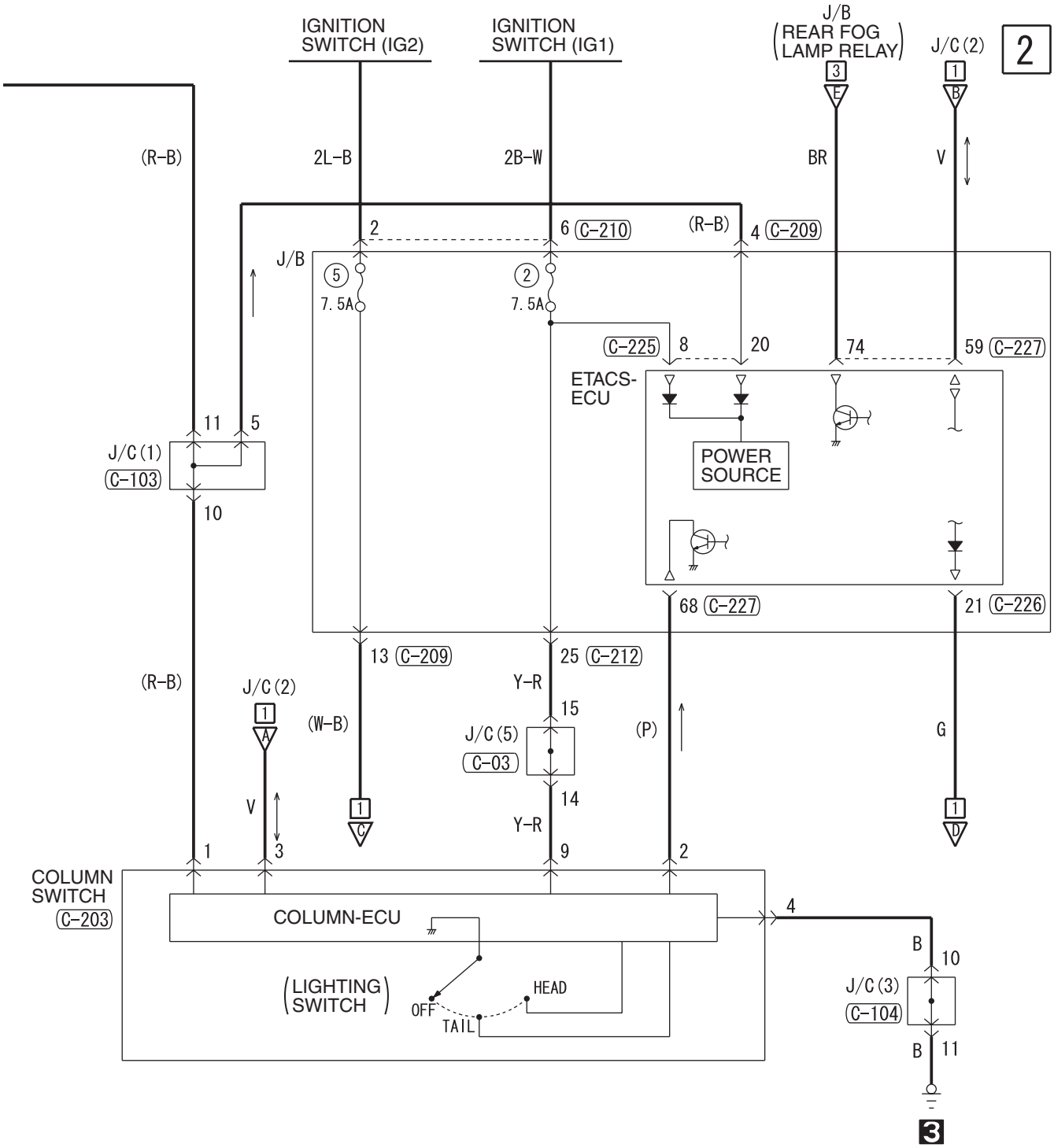
IGNITION SWITCH (IG2)
IGNITION SWITCH (IG1)
J/B (REAR FOG LAMP RELAY)
J/C (2)
2
(R-B)
2L-B
2B-W
BR
V
2
6 (C-210)
(R-B)
4 (C-209)
J/B
5
7.5A
2
7.5A
(C-225) 8
20
74
59 (C-227)
ETACS-ECU
POWER SOURCE
11
5
J/C (1)
(C-103)
10
68 (C-227)
21 (C-226)
13 (C-209)
25 (C-212)
(R-B)
J/C (2)
Y-R
15
(W-B)
J/C (5)
(C-03)
(P)
G
V
14
Y-R
1
3
9
2
COLUMN SWITCH
(C-203)
COLUMN-ECU
4
B
10
(LIGHTING SWITCH)
OFF
HEAD
TAIL
J/C (3)
(C-104)
B
11
3
C-35
MU801515
C-103
MU801515
C-104
MU801515
C-203
(MU801514)
C-209
MU801857
C-210
MU801331
C-227
(MU803766)
Wire colour code
B : Black LG : Light green G : Green L : Blue W : White
Y : Yellow SB : Sky blue BR : Brown O : Orange
GR : Grey R : Red P : Pink V : Violet PU : Purple
H6J08E34AB

REAR FOG LAMP <LHD> (CONTINUED)

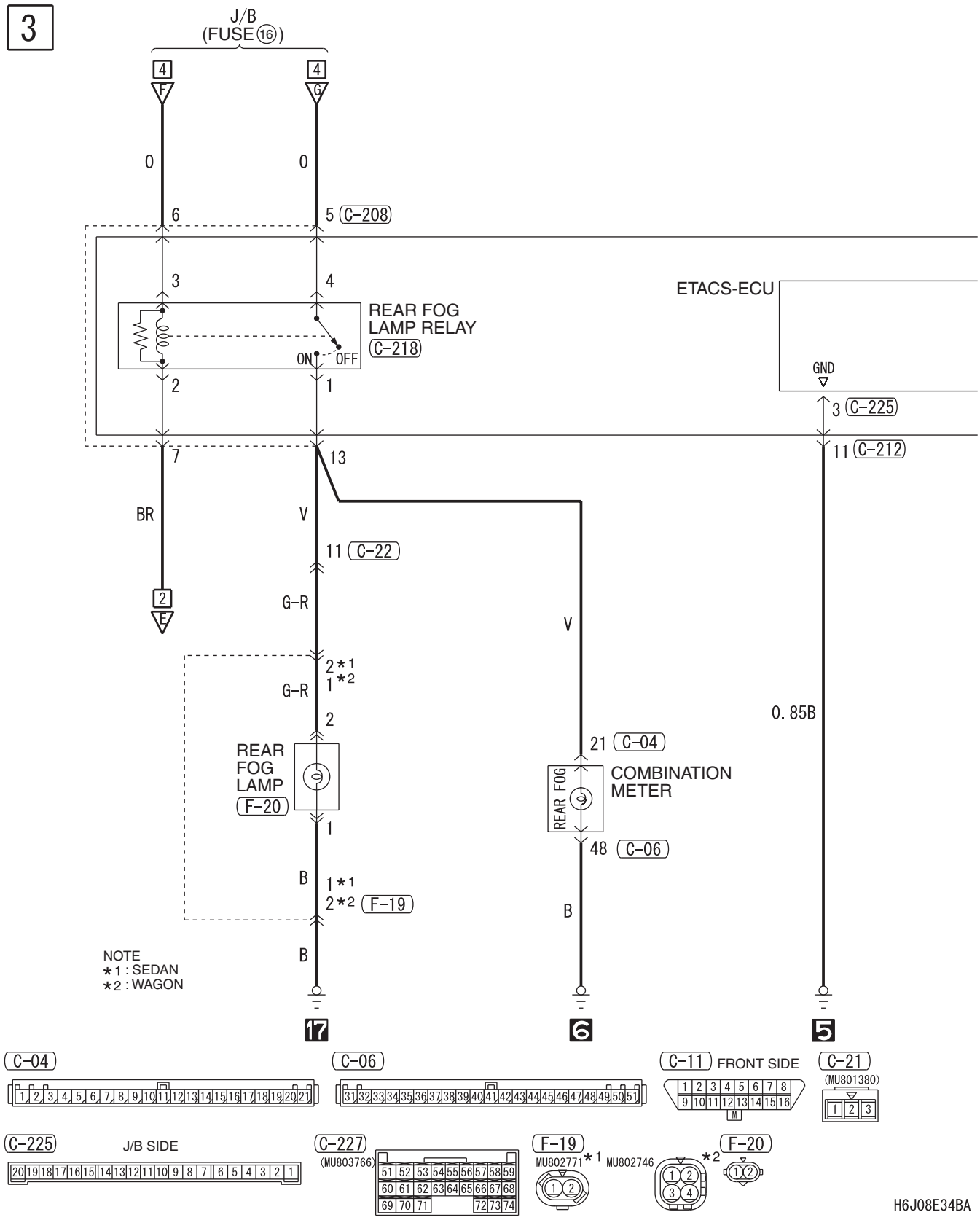

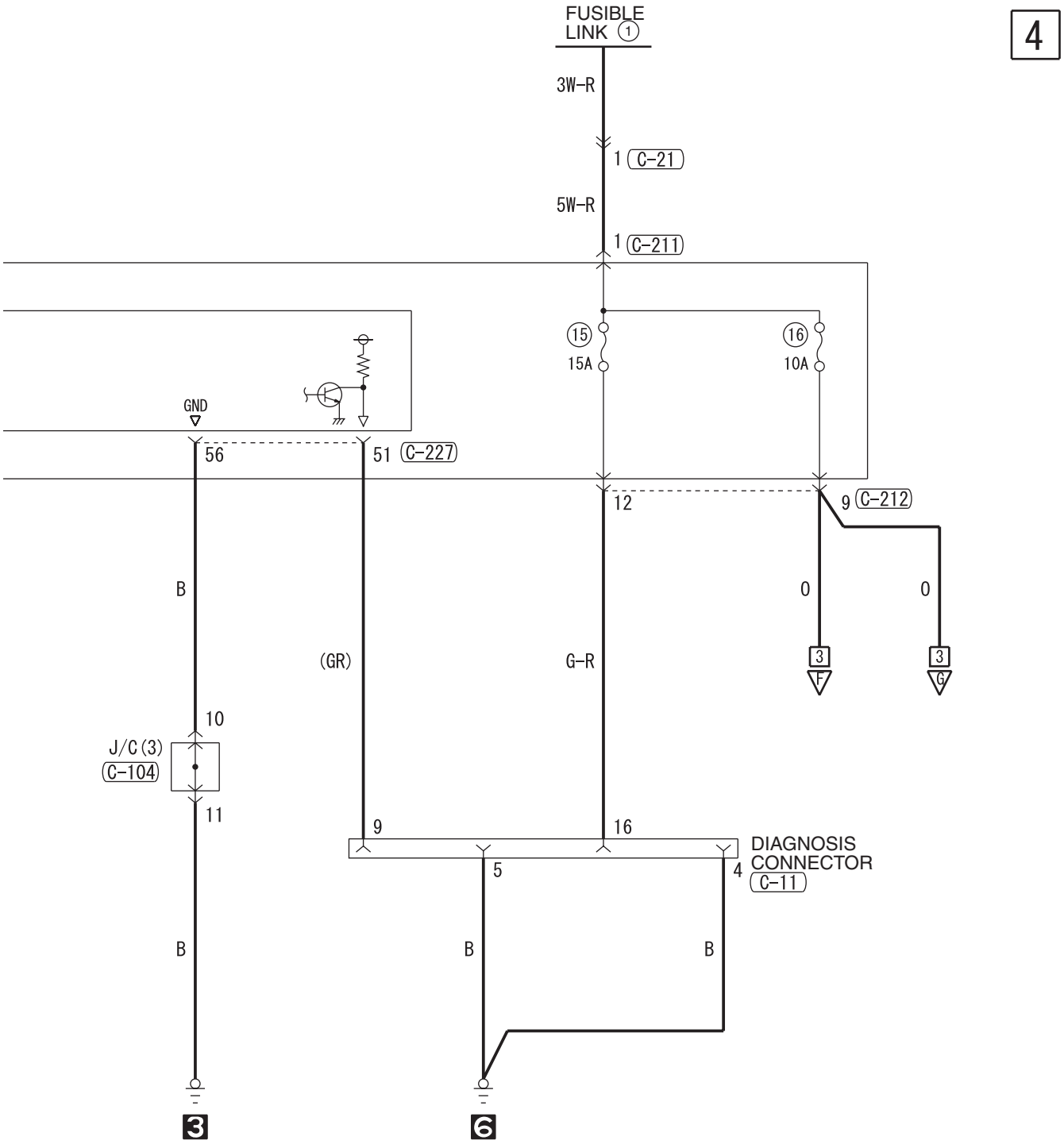

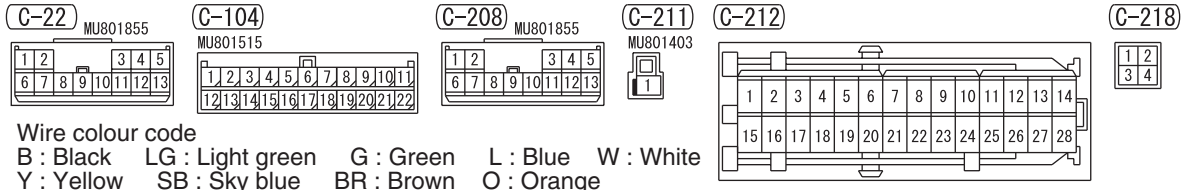

Wire colour code
B : Black LG : Light green G : Green L : Blue W : White
Y : Yellow SB : Sky blue BR : Brown O : Orange
GR : Grey R : Red P : Pink V : Violet PU : Purple

H6J08E34BB

REAR FOG LAMP <RHD>

M1901012000629

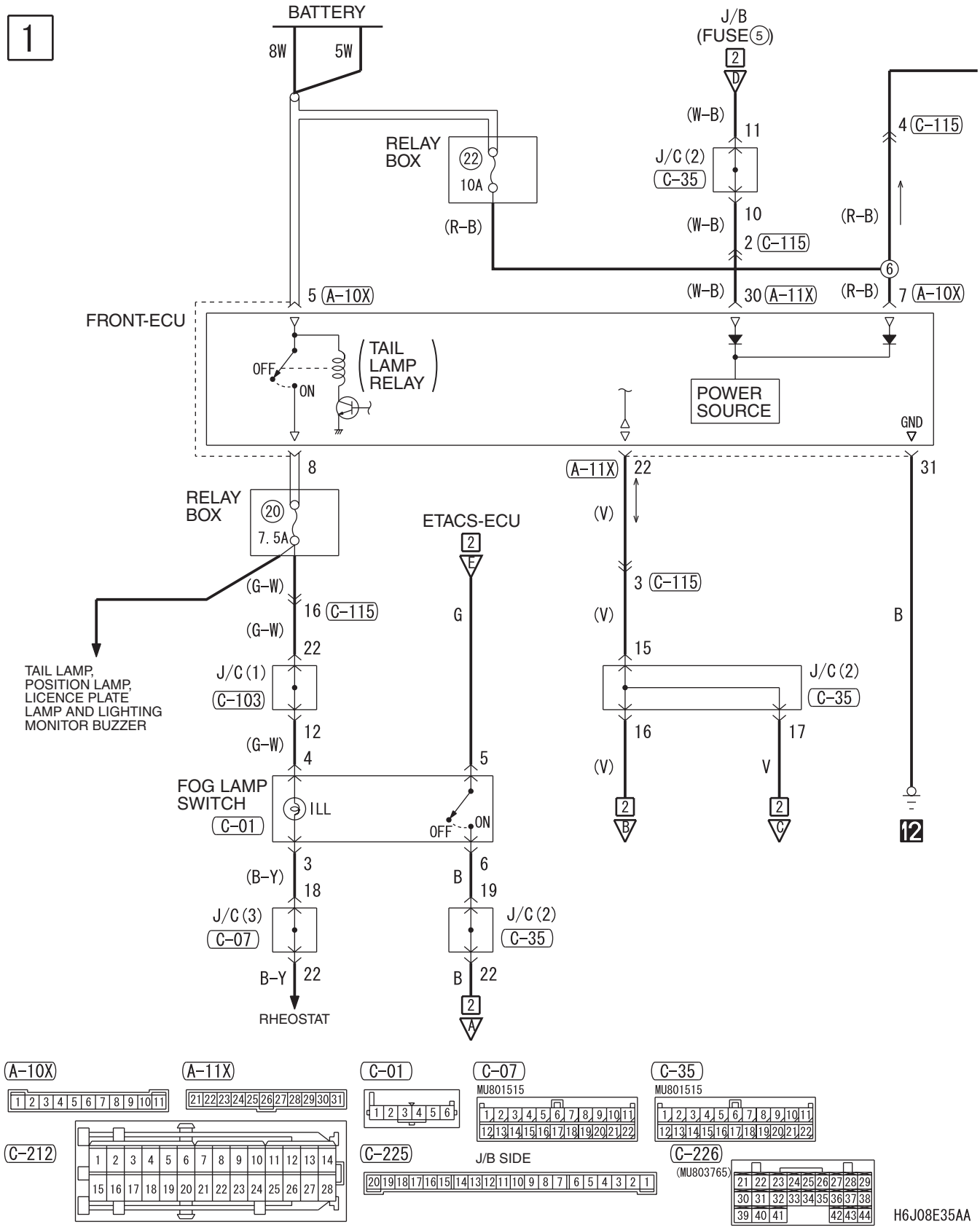

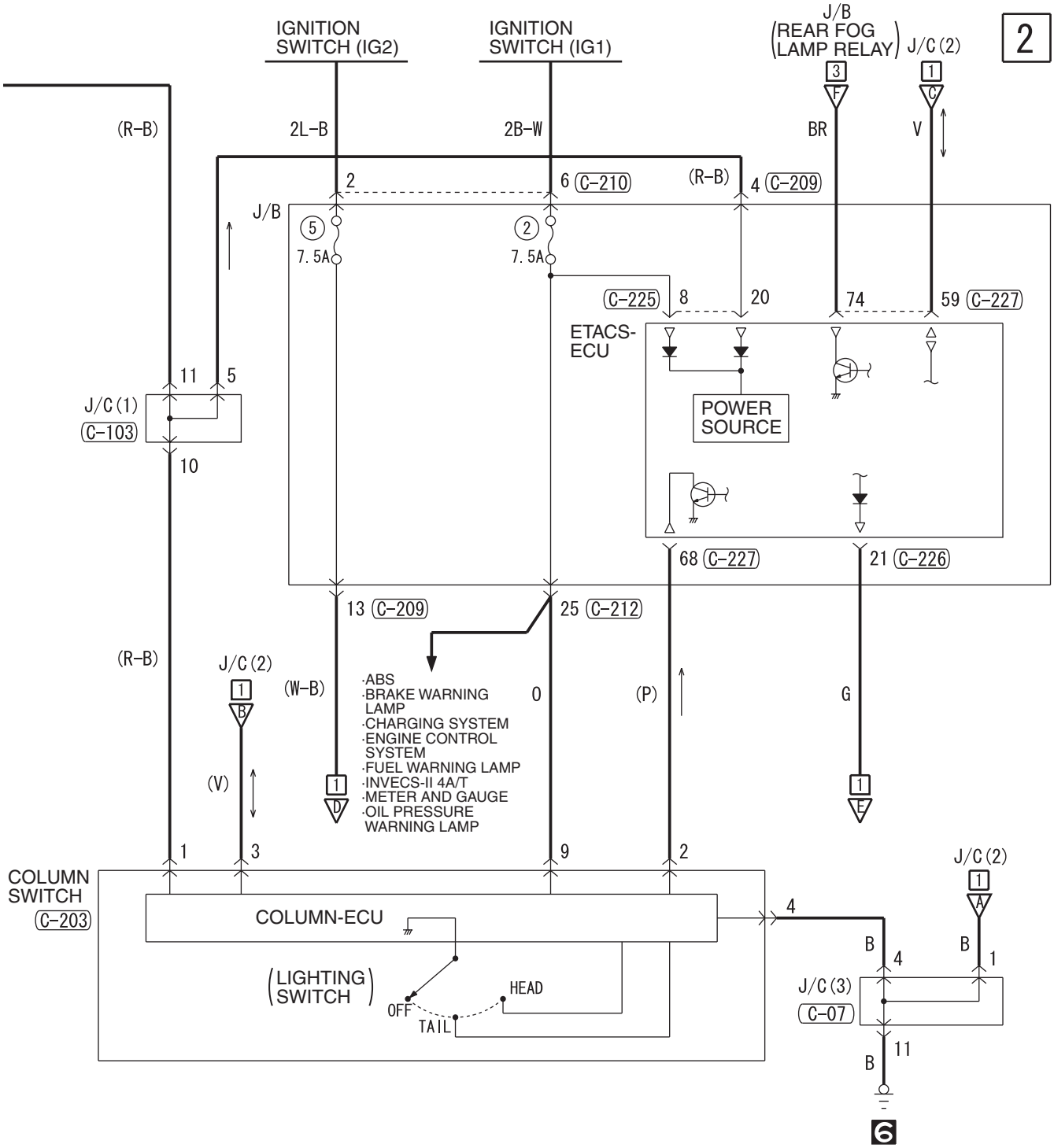
IGNITION SWITCH (IG2)
IGNITION SWITCH (IG1)
J/B (REAR FOG LAMP RELAY)
J/C (2)
2
(R-B)
2L-B
2B-W
BR
V
2
6 (C-210)
(R-B)
4 (C-209)
J/B
5
7.5A
2
7.5A
(C-225)
8
20
74
59 (C-227)
ETACS-ECU
POWER SOURCE
11
5
J/C (1)
(C-103)
10
68 (C-227)
21 (C-226)
13 (C-209)
25 (C-212)
(R-B)
J/C (2)
(W-B)
·ABS
·BRAKE WARNING LAMP
·CHARGING SYSTEM
·ENGINE CONTROL SYSTEM
·FUEL WARNING LAMP
·INVECS-II 4A/T
·METER AND GAUGE
·OIL PRESSURE WARNING LAMP
O
(P)
G
(V)
1
3
9
2
COLUMN SWITCH
(C-203)
COLUMN-ECU
(LIGHTING SWITCH)
OFF
TAIL
HEAD
4
B
4
B
1
J/C (2)
J/C (3)
(C-07)
11
B
6
(C-103)
MU801515
(C-115)
(C-203)
(MU801514)
(C-209)
MU801857
(C-210)
MU801331
(C-227)
(MU803766)
Wire colour code
B : Black LG : Light green G : Green L : Blue W : White
Y : Yellow SB : Sky blue BR : Brown O : Orange
GR : Grey R : Red P : Pink V : Violet PU : Purple
H6J08E35AB

REAR FOG LAMP <RHD> (CONTINUED)

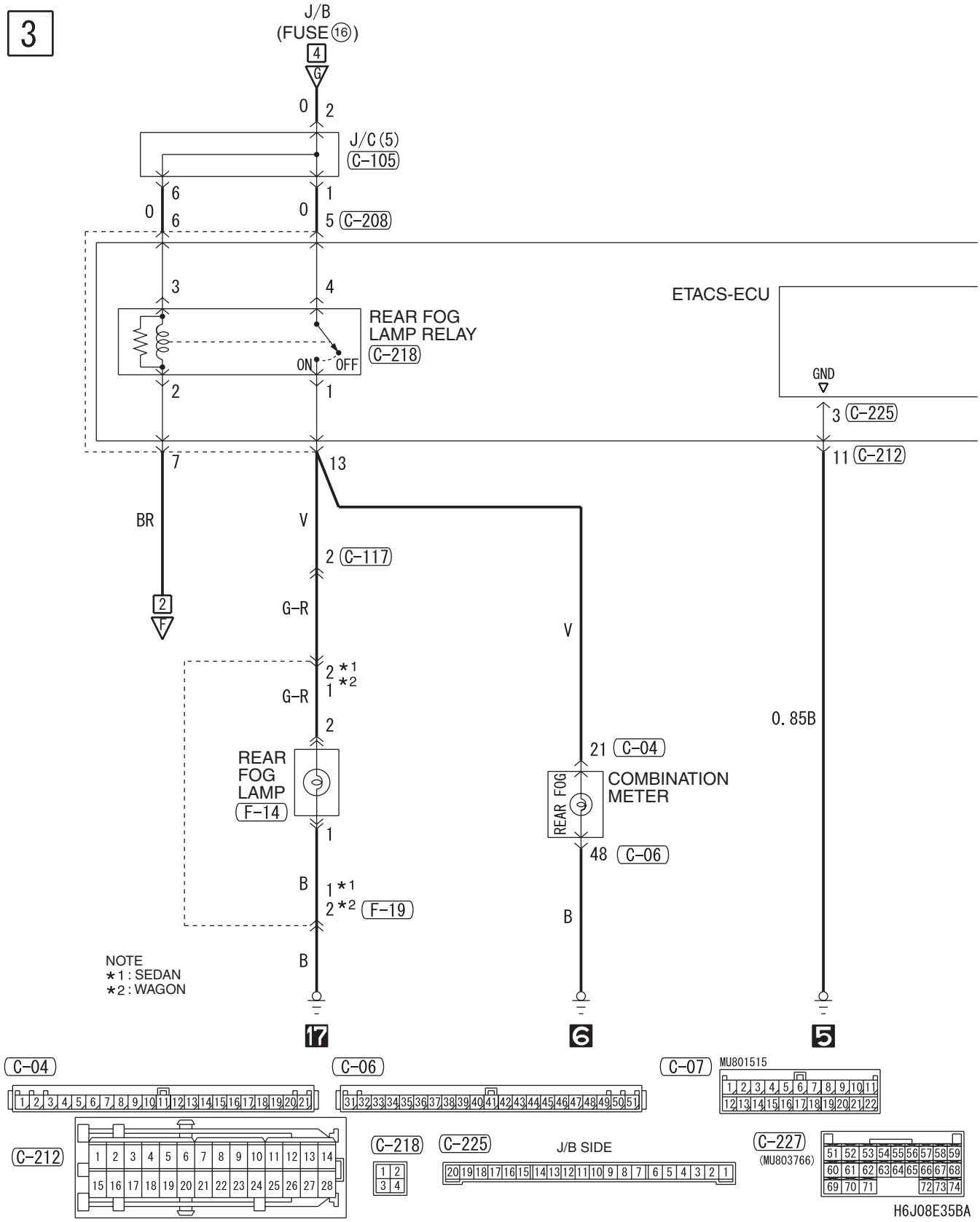

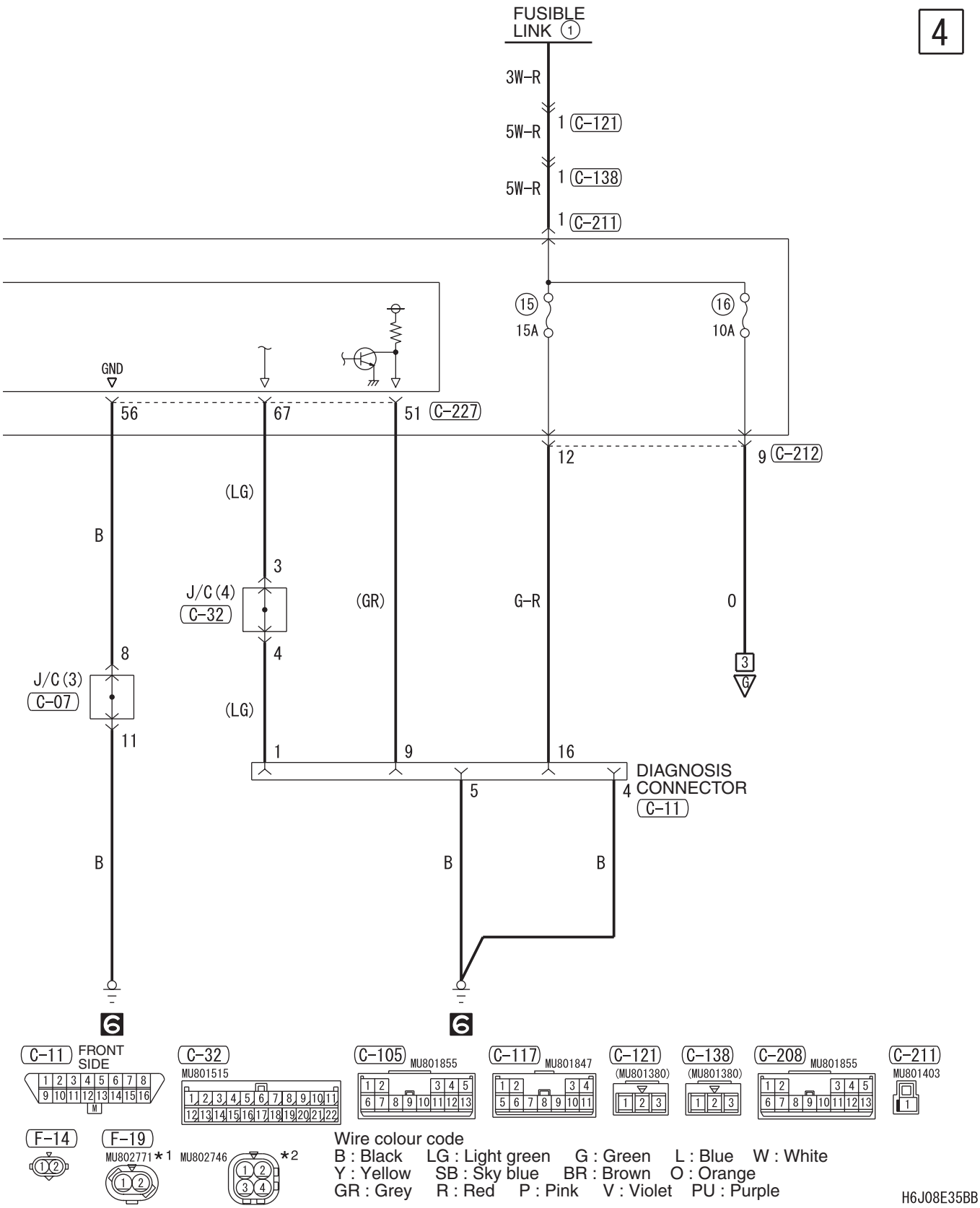
4
FUSIBLE LINK 1
3W-R
5W-R
1 C-121
5W-R
1 C-138
1 C-211
15
15A
16
10A
GND
56
67
51 C-227
12
9 C-212
(LG)
B
3
J/C (4)
C-32
(GR)
G-R
O
8
J/C (3)
C-07
4
(LG)
11
1
9
16
DIAGNOSIS CONNECTOR
C-11
5
4
B
B
B
6
6
C-11 FRONT SIDE
C-32
MU801515
C-105
MU801855
C-117
MU801847
C-121
(MU801380)
C-138
(MU801380)
C-208
MU801855
C-211
MU801403
F-14
F-19
MU802771 *1
MU802746
*2
Wire colour code
B : Black LG : Light green G : Green L : Blue W : White
Y : Yellow SB : Sky blue BR : Brown O : Orange
GR : Grey R : Red P : Pink V : Violet PU : Purple
H6J08E35BB

HEADLAMP LEVELLING SYSTEM

HEADLAMP LEVELLING SYSTEM <LHD>

M1901012500828

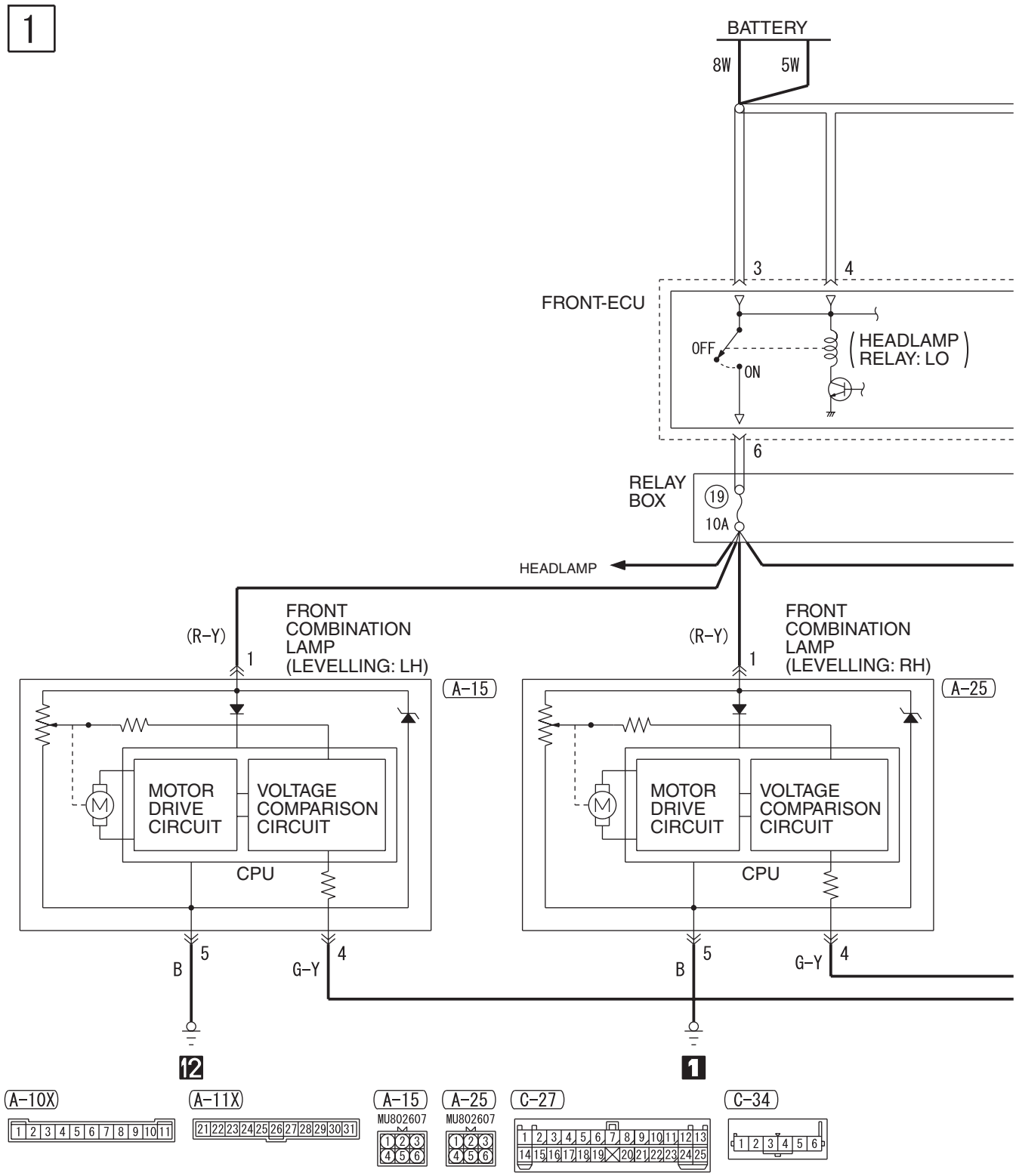

H6J08E36AA

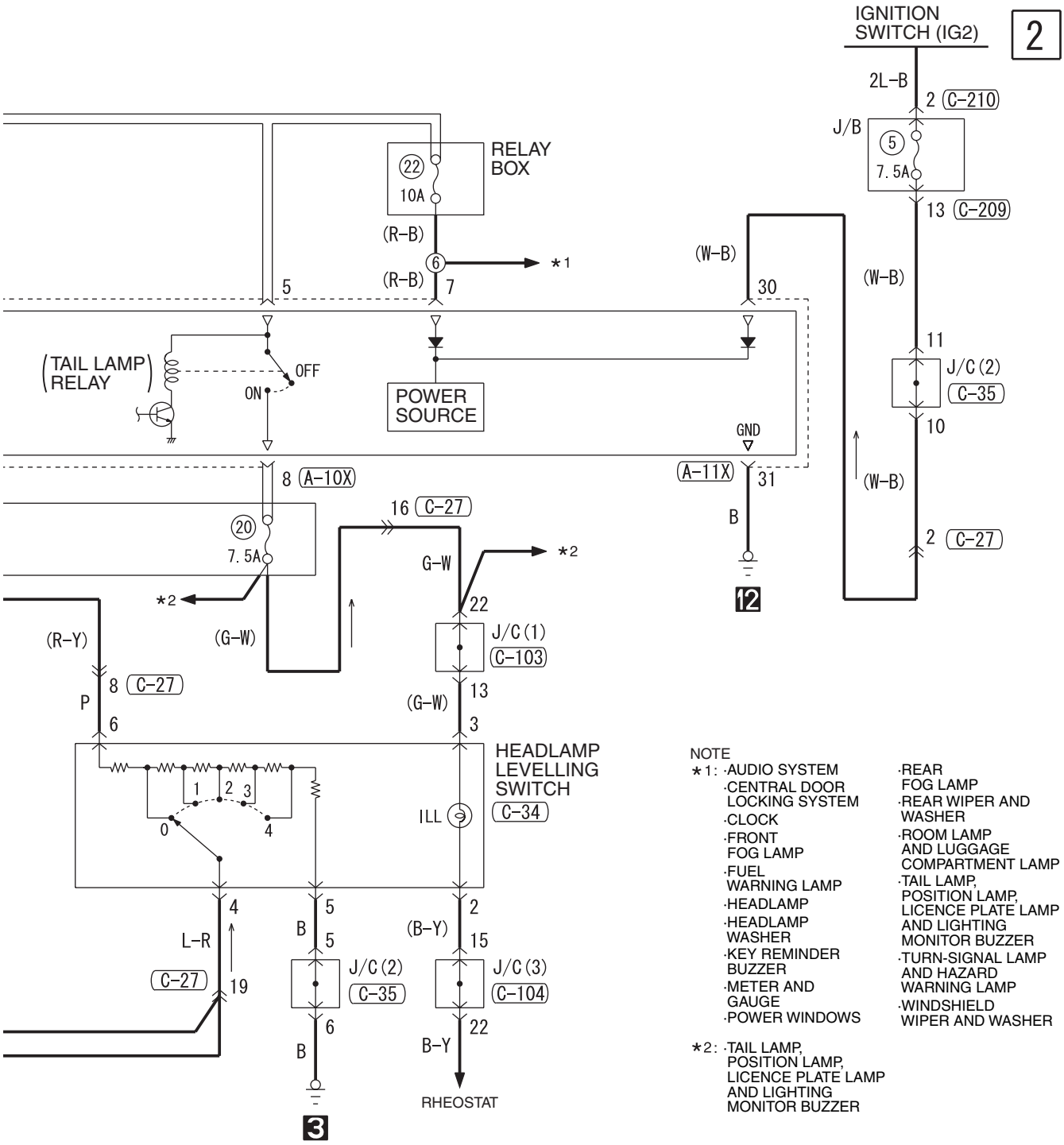

NOTE

*1: ·AUDIO SYSTEM
·CENTRAL DOOR LOCKING SYSTEM
·CLOCK
·FRONT FOG LAMP
·FUEL WARNING LAMP
·HEADLAMP
·HEADLAMP WASHER
·KEY REMINDER BUZZER
·METER AND GAUGE
·POWER WINDOWS
·REAR FOG LAMP
·REAR WIPER AND WASHER
·ROOM LAMP AND LUGGAGE COMPARTMENT LAMP
·TAIL LAMP, POSITION LAMP, LICENCE PLATE LAMP AND LIGHTING MONITOR BUZZER
·TURN-SIGNAL LAMP AND HAZARD WARNING LAMP
·WINDSHIELD WIPER AND WASHER

*2: ·TAIL LAMP, POSITION LAMP, LICENCE PLATE LAMP AND LIGHTING MONITOR BUZZER

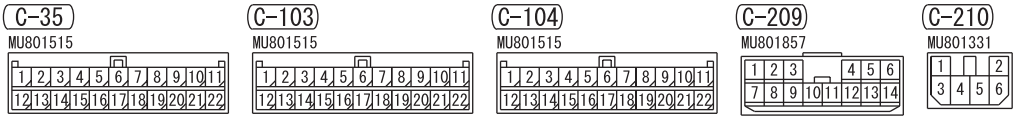

Wire colour code
B : Black LG : Light green G : Green L : Blue W : White Y : Yellow SB : Sky blue
BR : Brown O : Orange GR : Grey R : Red P : Pink V : Violet PU : Purple

H6J08E36AB

HEADLAMP LEVELLING SYSTEM <RHD>

M1901012500839

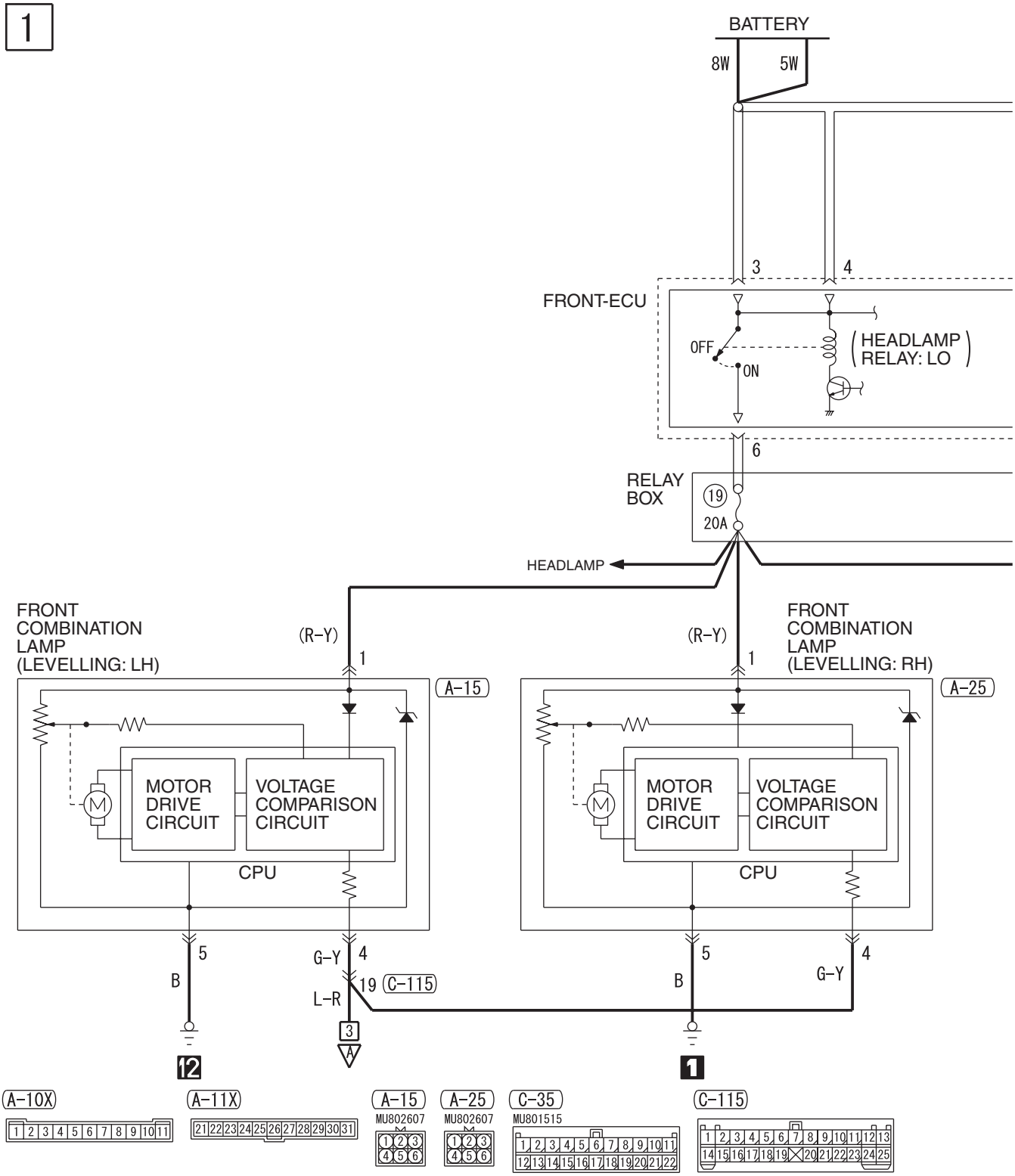

H6J08E37AA

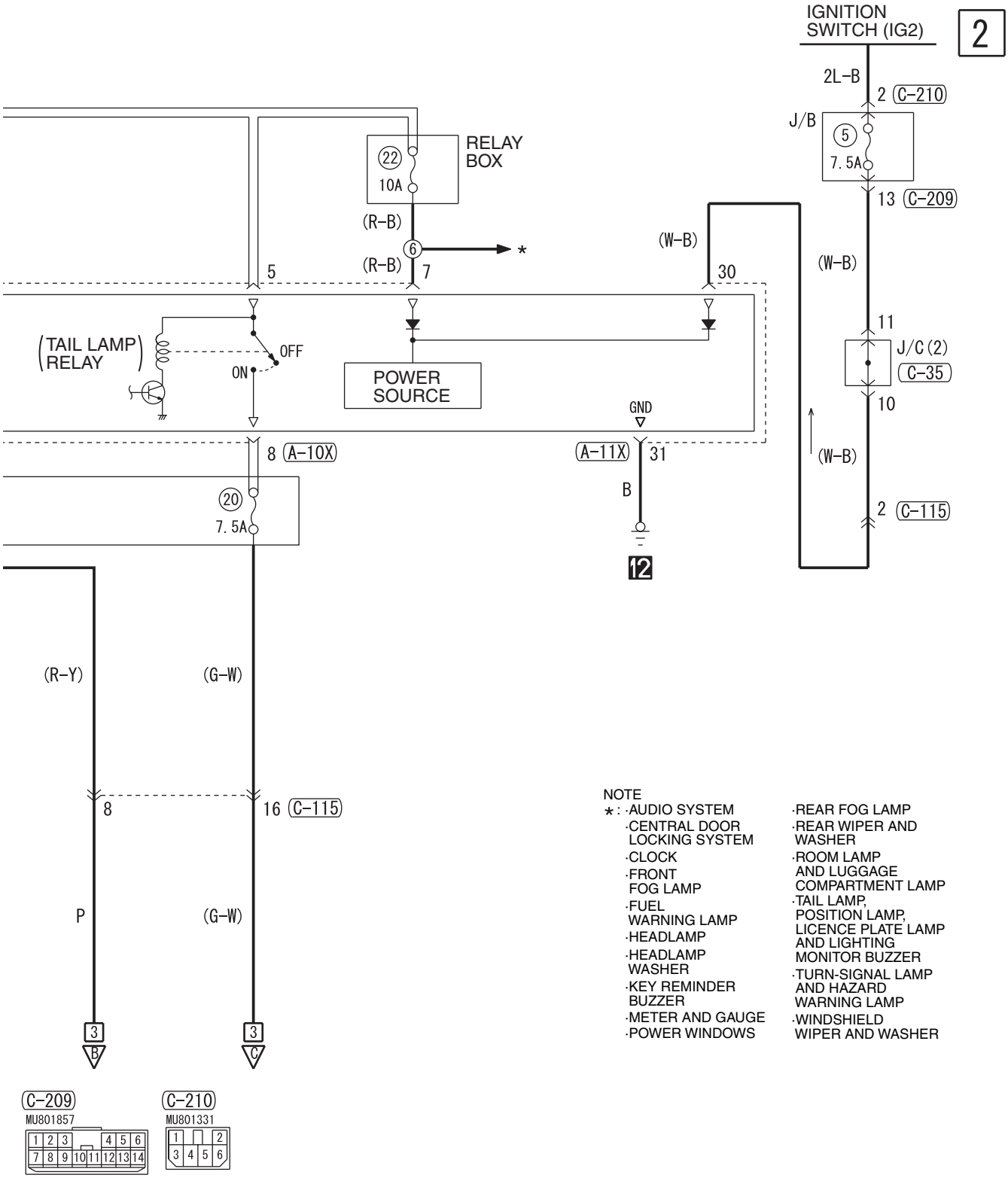

NOTE
*: ·AUDIO SYSTEM
·CENTRAL DOOR LOCKING SYSTEM
·CLOCK
·FRONT FOG LAMP
·FUEL WARNING LAMP
·HEADLAMP
·HEADLAMP WASHER
·KEY REMINDER BUZZER
·METER AND GAUGE
·POWER WINDOWS
·REAR FOG LAMP
·REAR WIPER AND WASHER
·ROOM LAMP AND LUGGAGE COMPARTMENT LAMP
·TAIL LAMP, POSITION LAMP, LICENCE PLATE LAMP AND LIGHTING MONITOR BUZZER
·TURN-SIGNAL LAMP AND HAZARD WARNING LAMP
·WINDSHIELD WIPER AND WASHER

Wire colour code
B : Black LG : Light green G : Green L : Blue W : White Y : Yellow SB : Sky blue
BR : Brown O : Orange GR : Grey R : Red P : Pink V : Violet PU : Purple

H6J08E37AB

HEADLAMP LEVELLING SYSTEM <RHD> (CONTINUED)

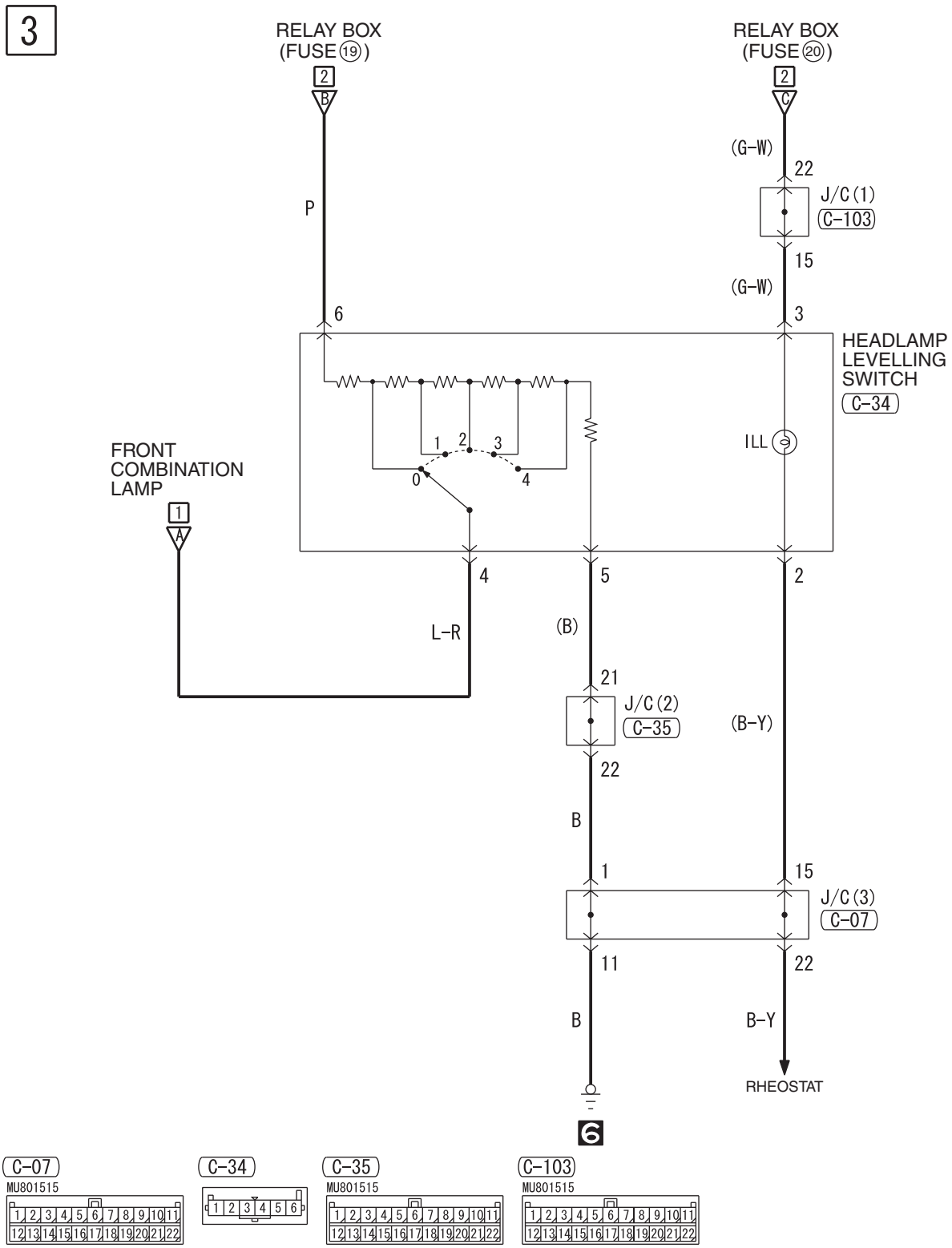

Wire colour code
B : Black LG : Light green G : Green L : Blue W : White Y : Yellow SB : Sky blue
BR : Brown O : Orange GR : Grey R : Red P : Pink V : Violet PU : Purple

H6J08E37BA

NOTES

TURN-SIGNAL LAMP AND HAZARD WARNING LAMP

TURN SIGNAL LAMP AND HAZARD WARNING LAMP <LHD>

M1901002901873

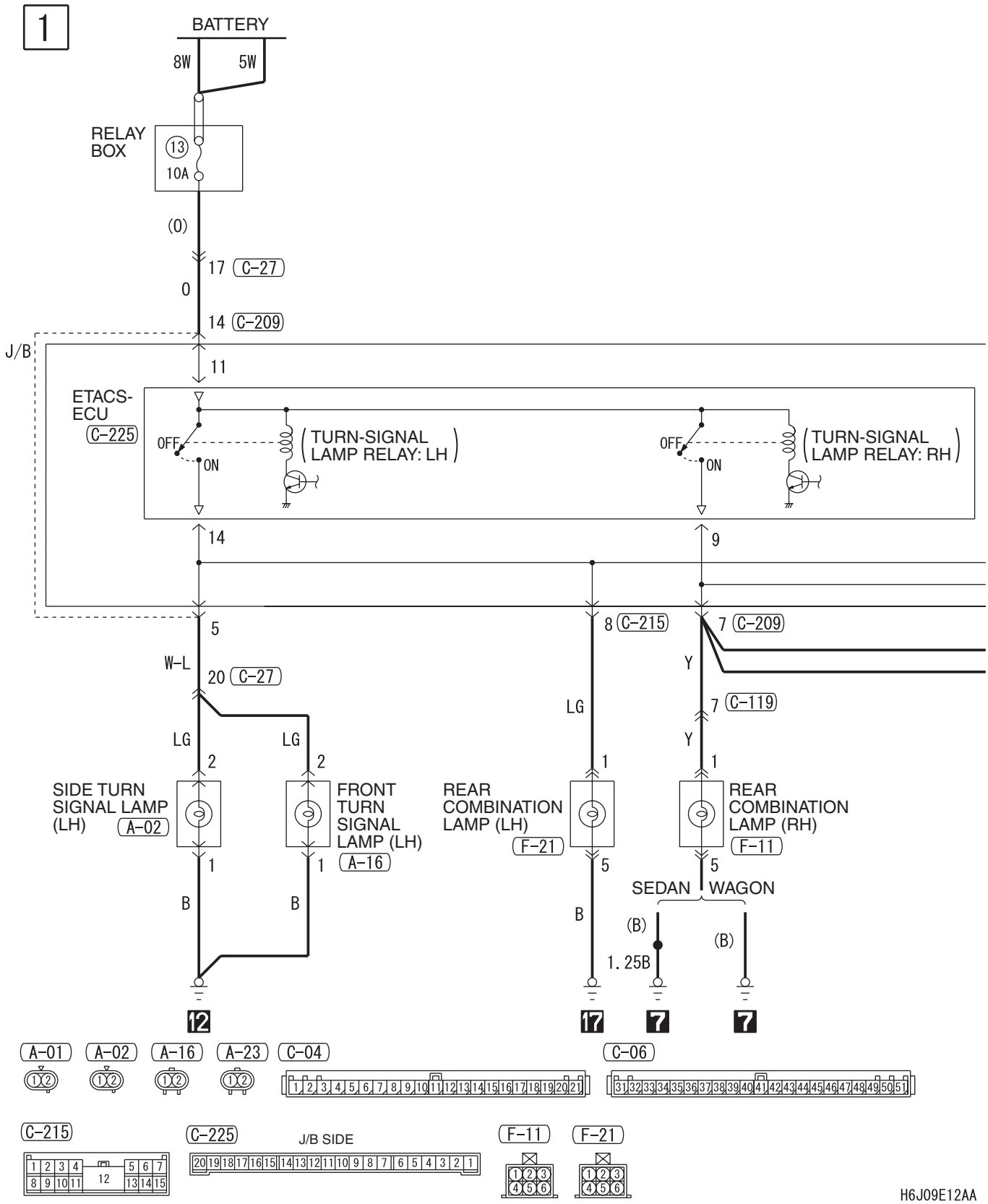

2

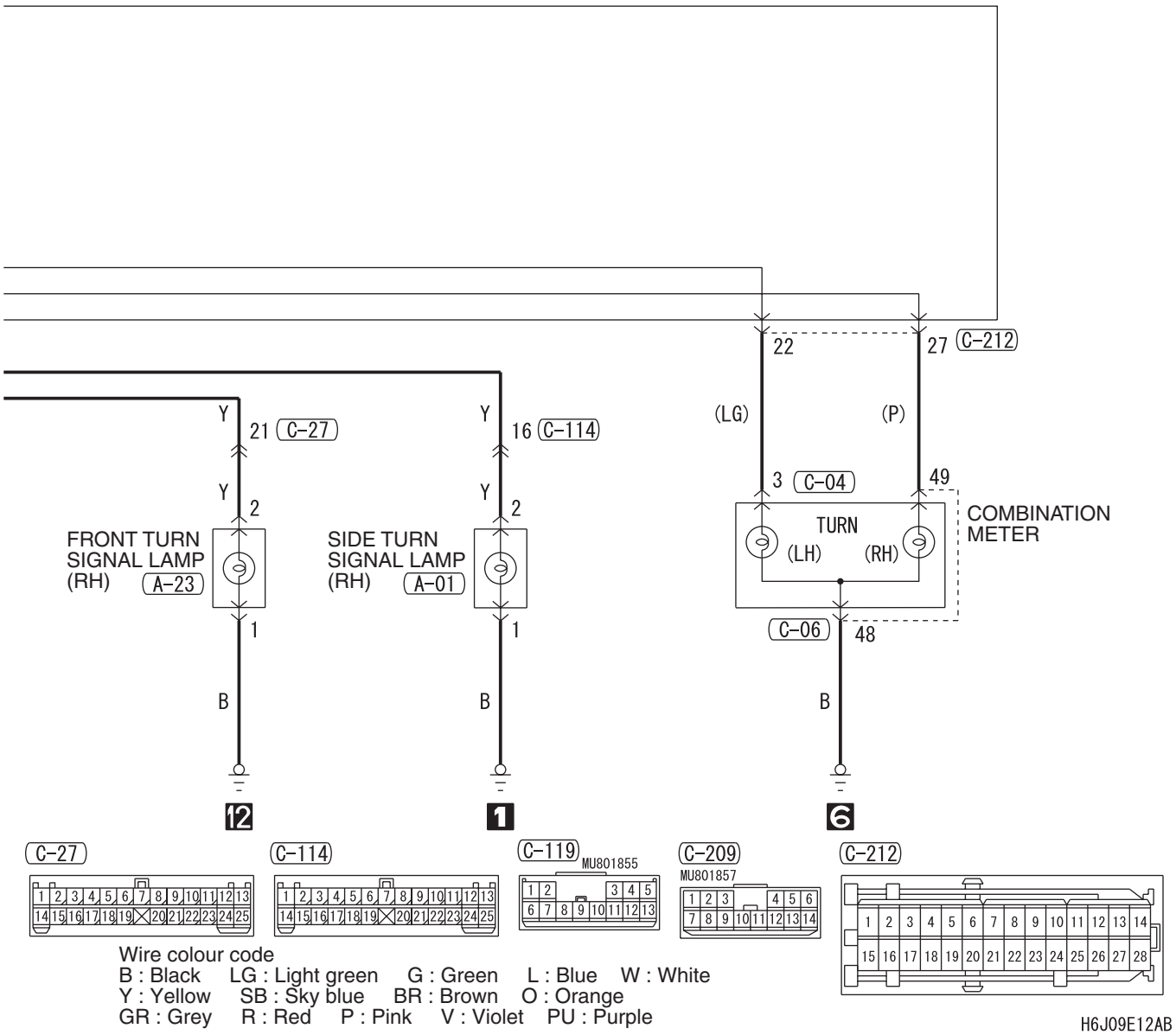
22
27
C-212
Y
21
C-27
Y
16
C-114
(LG)
(P)
Y
2
Y
2
3
C-04
49
FRONT TURN
SIGNAL LAMP
(RH)
A-23
SIDE TURN
SIGNAL LAMP
(RH)
A-01
TURN
(LH)
(RH)
COMBINATION
METER
1
1
C-06
48
B
B
B
12
1
6
C-27
C-114
C-119
MU801855
C-209
MU801857
C-212
Wire colour code
B : Black LG : Light green G : Green L : Blue W : White
Y : Yellow SB : Sky blue BR : Brown O : Orange
GR : Grey R : Red P : Pink V : Violet PU : Purple
H6J09E12AB

TURN SIGNAL LAMP AND HAZARD WARNING LAMP <LHD> (CONTINUED)

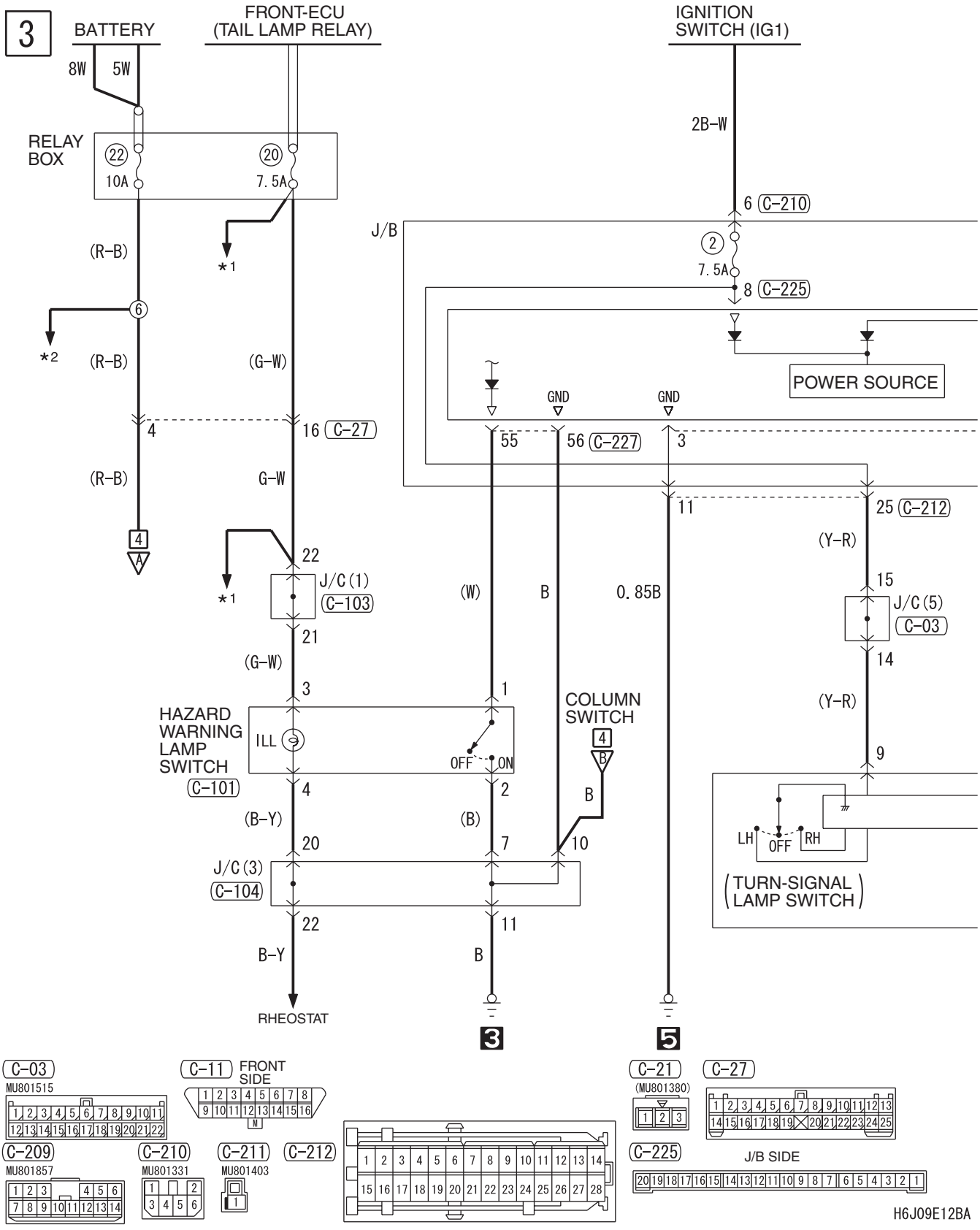

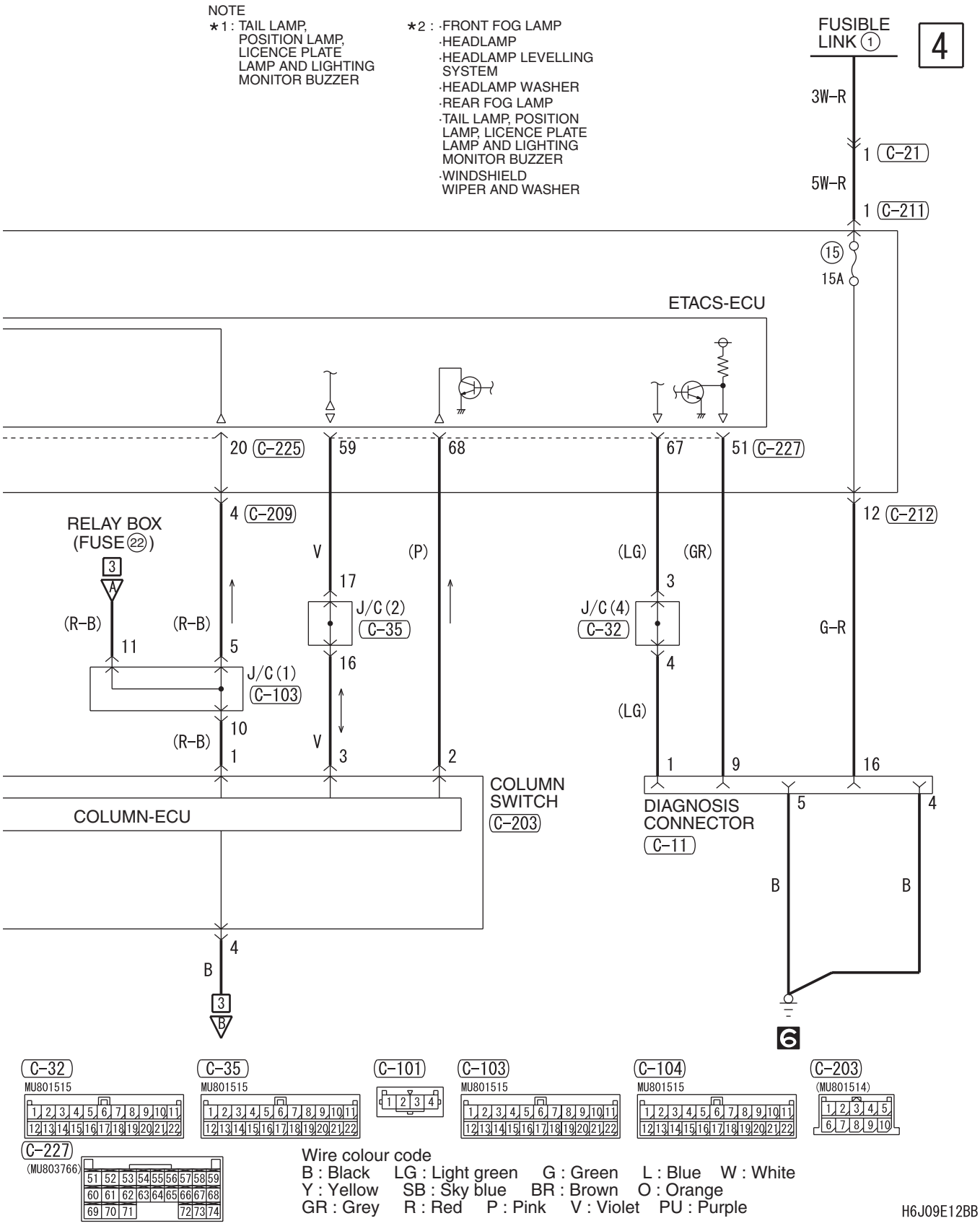
NOTE
*1: TAIL LAMP, POSITION LAMP, LICENCE PLATE LAMP AND LIGHTING MONITOR BUZZER
*2: ·FRONT FOG LAMP
·HEADLAMP
·HEADLAMP LEVELLING SYSTEM
·HEADLAMP WASHER
·REAR FOG LAMP
·TAIL LAMP, POSITION LAMP, LICENCE PLATE LAMP AND LIGHTING MONITOR BUZZER
·WINDSHIELD WIPER AND WASHER
FUSIBLE LINK 1
4
3W-R
1 C-21
5W-R
1 C-211
15
15A
ETACS-ECU
20 C-225
59
68
67
51 C-227
4 C-209
12 C-212
RELAY BOX (FUSE 22)
3
A
(R-B)
(R-B)
11
5
J/C (1)
C-103
10
(R-B)
1
V
17
J/C (2)
C-35
16
V
3
(P)
2
(LG)
(GR)
3
J/C (4)
C-32
4
(LG)
1
9
G-R
16
COLUMN SWITCH
C-203
COLUMN-ECU
DIAGNOSIS CONNECTOR
C-11
5
4
B
B
4
B
3
B
6
C-32
MU801515
C-35
MU801515
C-101
C-103
MU801515
C-104
MU801515
C-203
(MU801514)
C-227
(MU803766)
Wire colour code
B : Black LG : Light green G : Green L : Blue W : White
Y : Yellow SB : Sky blue BR : Brown O : Orange
GR : Grey R : Red P : Pink V : Violet PU : Purple
H6J09E12BB

TURN SIGNAL LAMP AND HAZARD WARNING LAMP <RHD>

M1901002901884

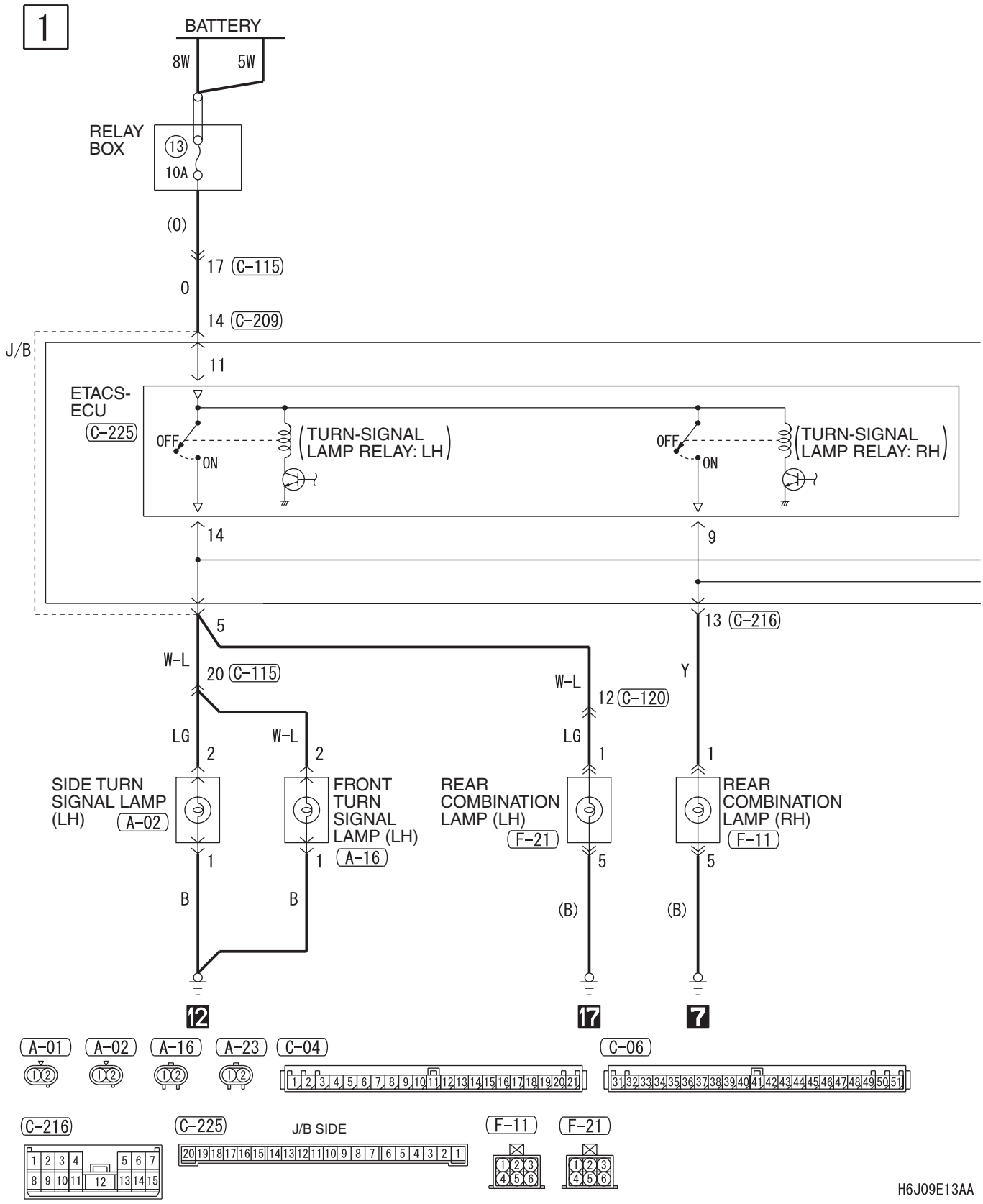

2

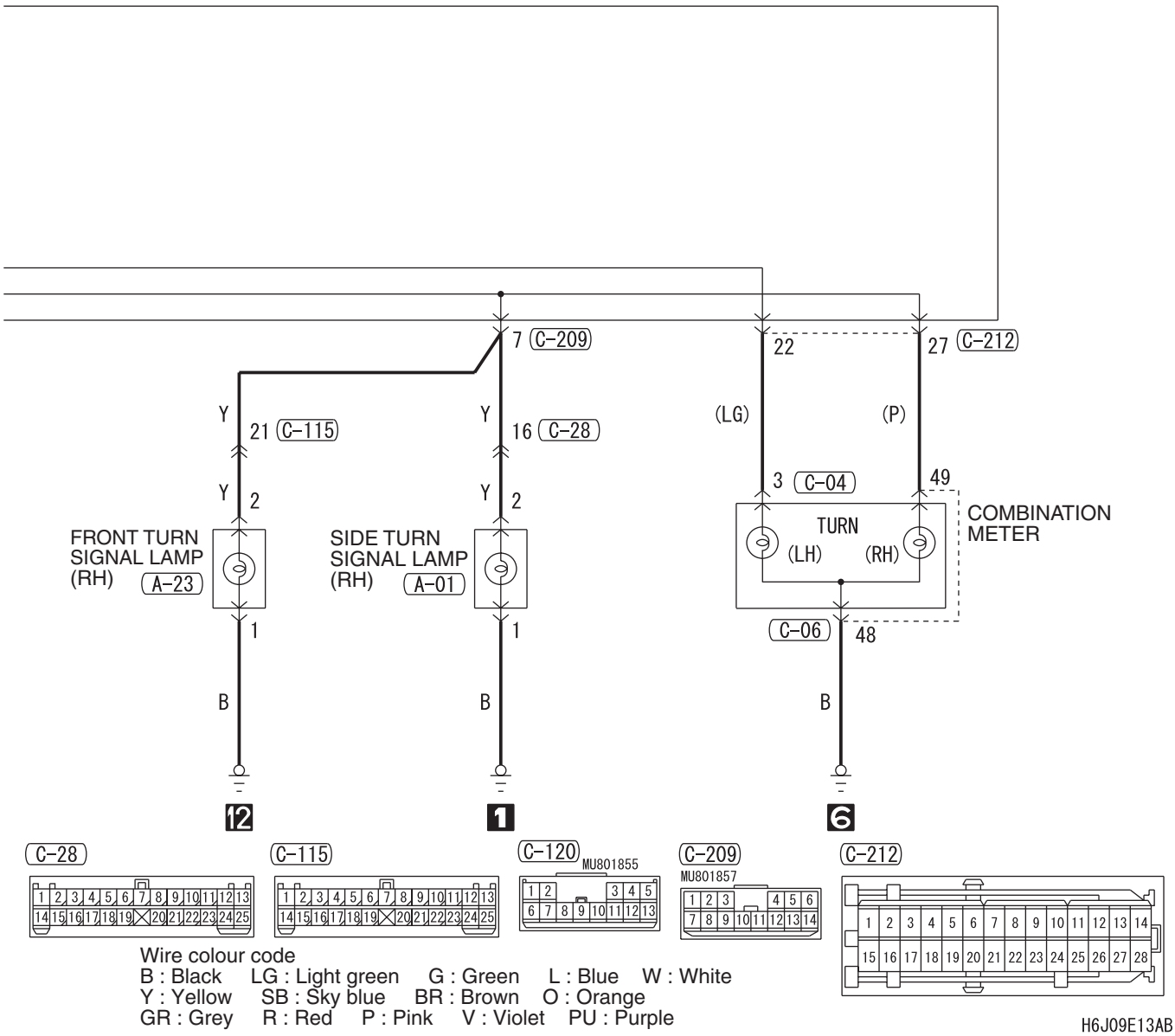
7 C-209
22
27 C-212
Y
21 C-115
Y
16 C-28
(LG)
(P)
Y
2
Y
2
3 C-04
49
FRONT TURN SIGNAL LAMP (RH) A-23
SIDE TURN SIGNAL LAMP (RH) A-01
TURN
(LH)
(RH)
COMBINATION METER
1
1
C-06
48
B
B
B
12
1
6
C-28
C-115
C-120
MU801855
C-209
MU801857
C-212
Wire colour code
B : Black LG : Light green G : Green L : Blue W : White
Y : Yellow SB : Sky blue BR : Brown O : Orange
GR : Grey R : Red P : Pink V : Violet PU : Purple
H6J09E13AB

TURN SIGNAL LAMP AND HAZARD WARNING LAMP <RHD> (CONTINUED)

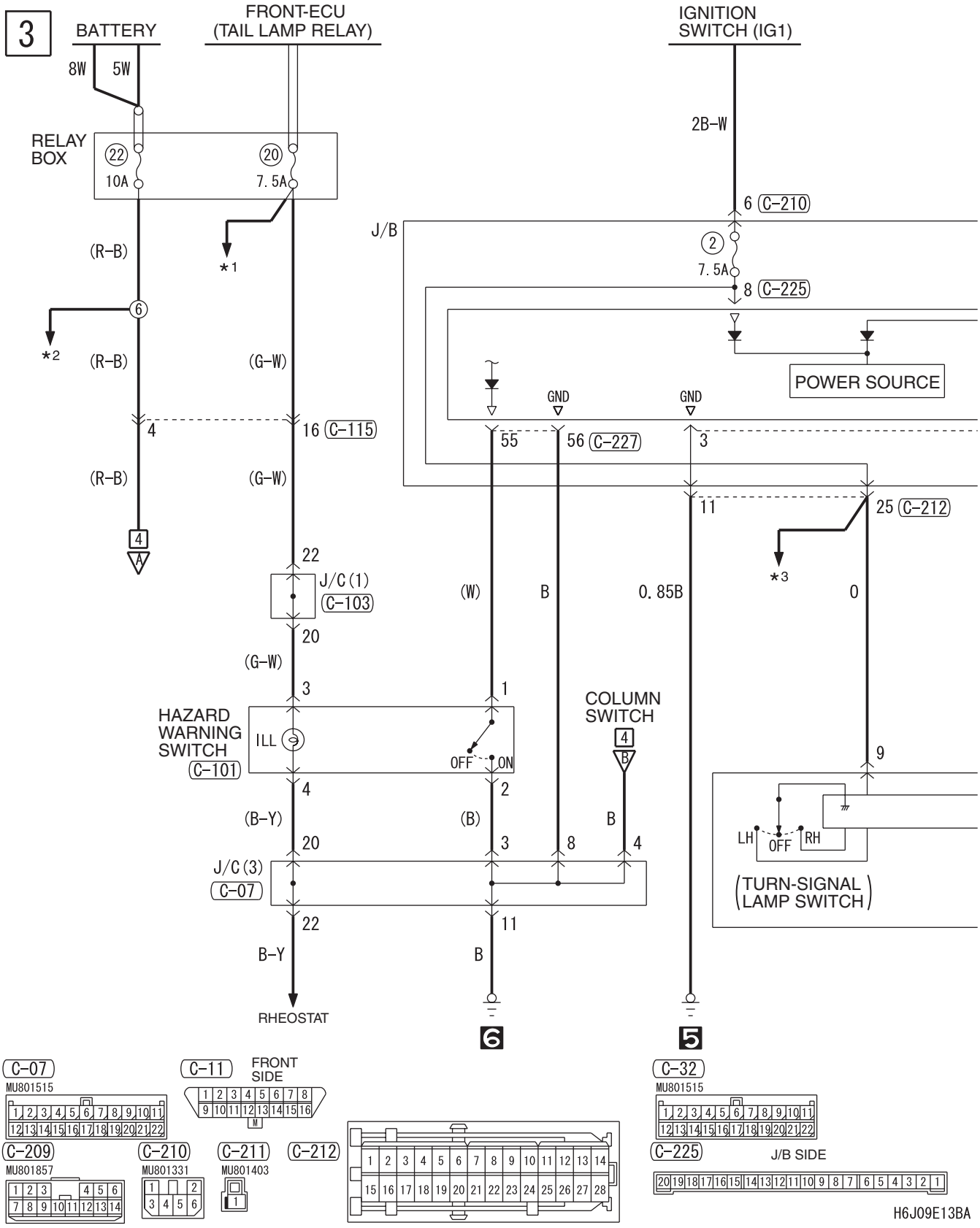

NOTE
*1 : TAIL LAMP, POSITION LAMP, LICENCE PLATE LAMP AND LIGHTING MONITOR BUZZER
*2 : ·FRONT FOG LAMP
·HEADLAMP
·HEADLAMP LEVELLING SYSTEM
·HEADLAMP WASHER
·REAR FOG LAMP
·TAIL LAMP, POSITION LAMP, LICENCE PLATE LAMP AND LIGHTING MONITOR BUZZER
·WINDSHIELD WIPER AND WASHER
*3 : ·ABS
·BRAKE WARNING LAMP
·CHARGING SYSTEM
·ENGINE CONTROL SYSTEM
·FUEL WARNING LAMP
·INVECS-II 4A/T
·METER AND GAUGE
·OIL PRESSURE WARNING LAMP

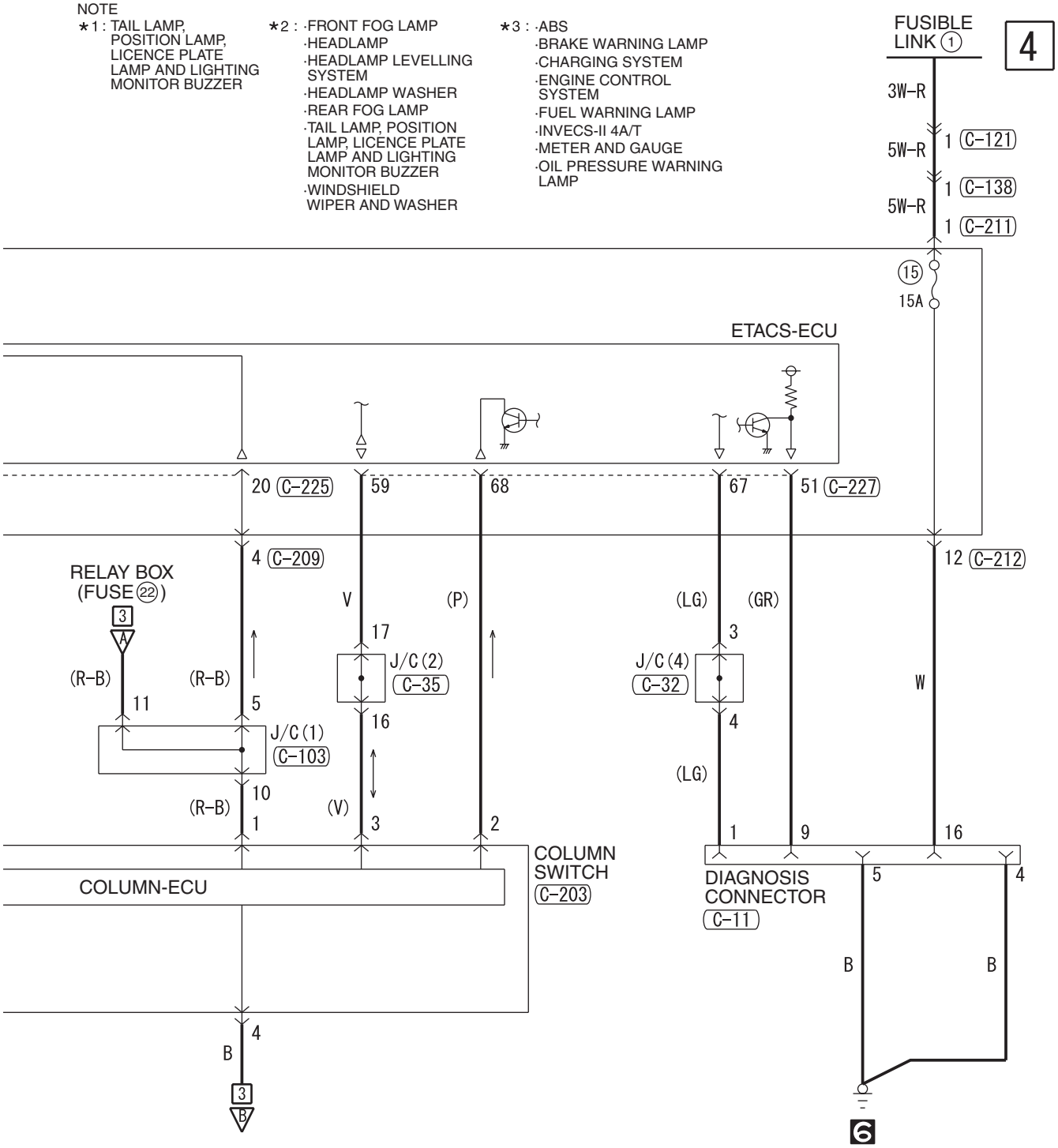

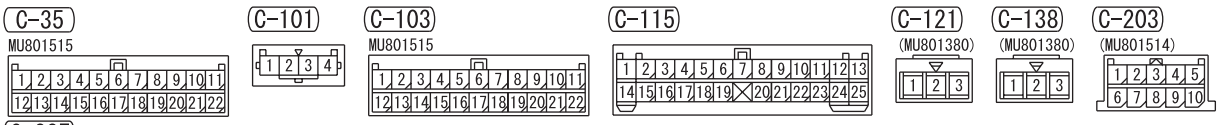

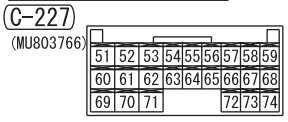

Wire colour code
B : Black LG : Light green G : Green L : Blue W : White
Y : Yellow SB : Sky blue BR : Brown O : Orange
GR : Grey R : Red P : Pink V : Violet PU : Purple

H6J09E13BB

BACK-UP LAMP

BACK-UP LAMP <LHD>

M1901003102077

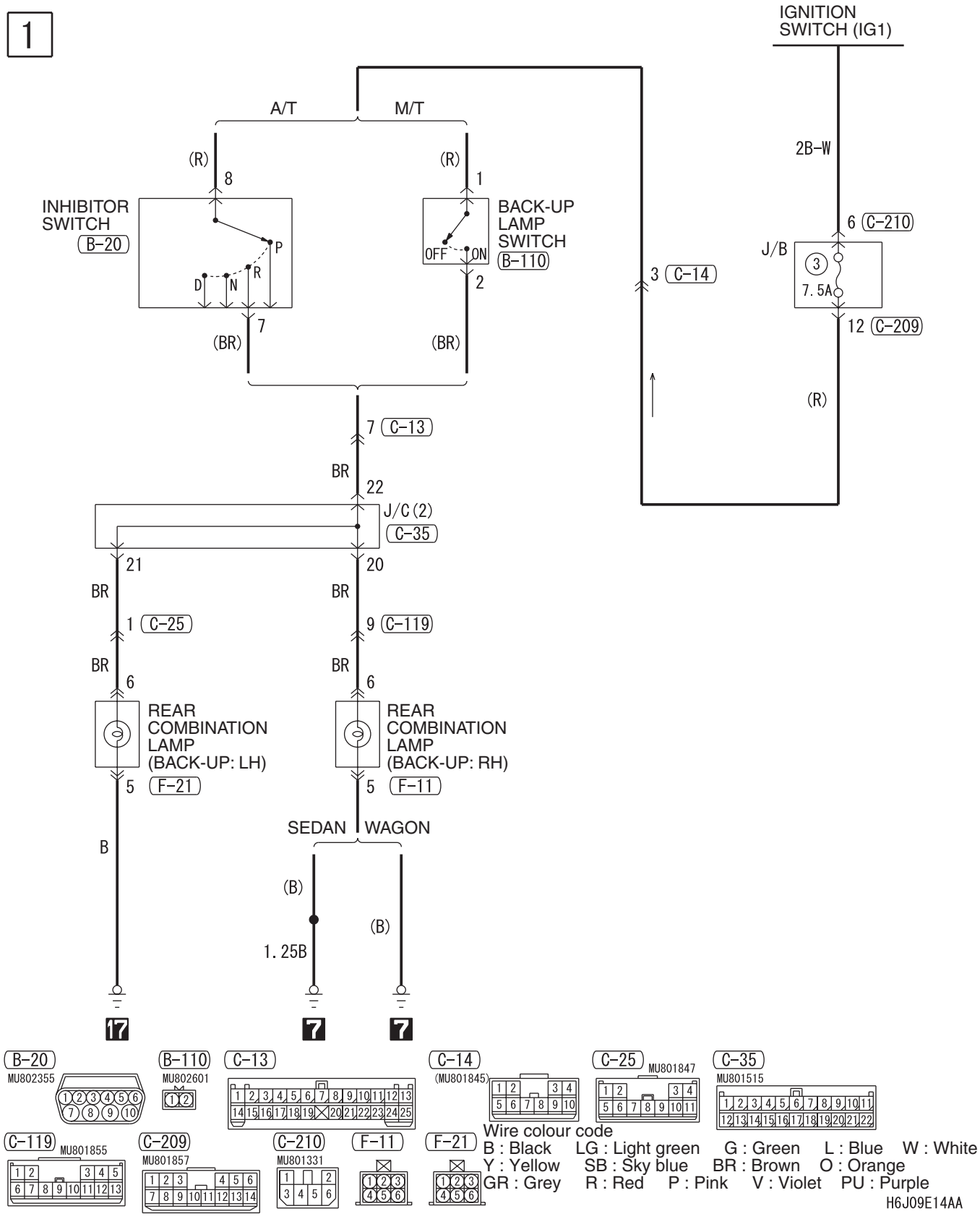

BACK-UP LAMP <RHD>

M1901003102088

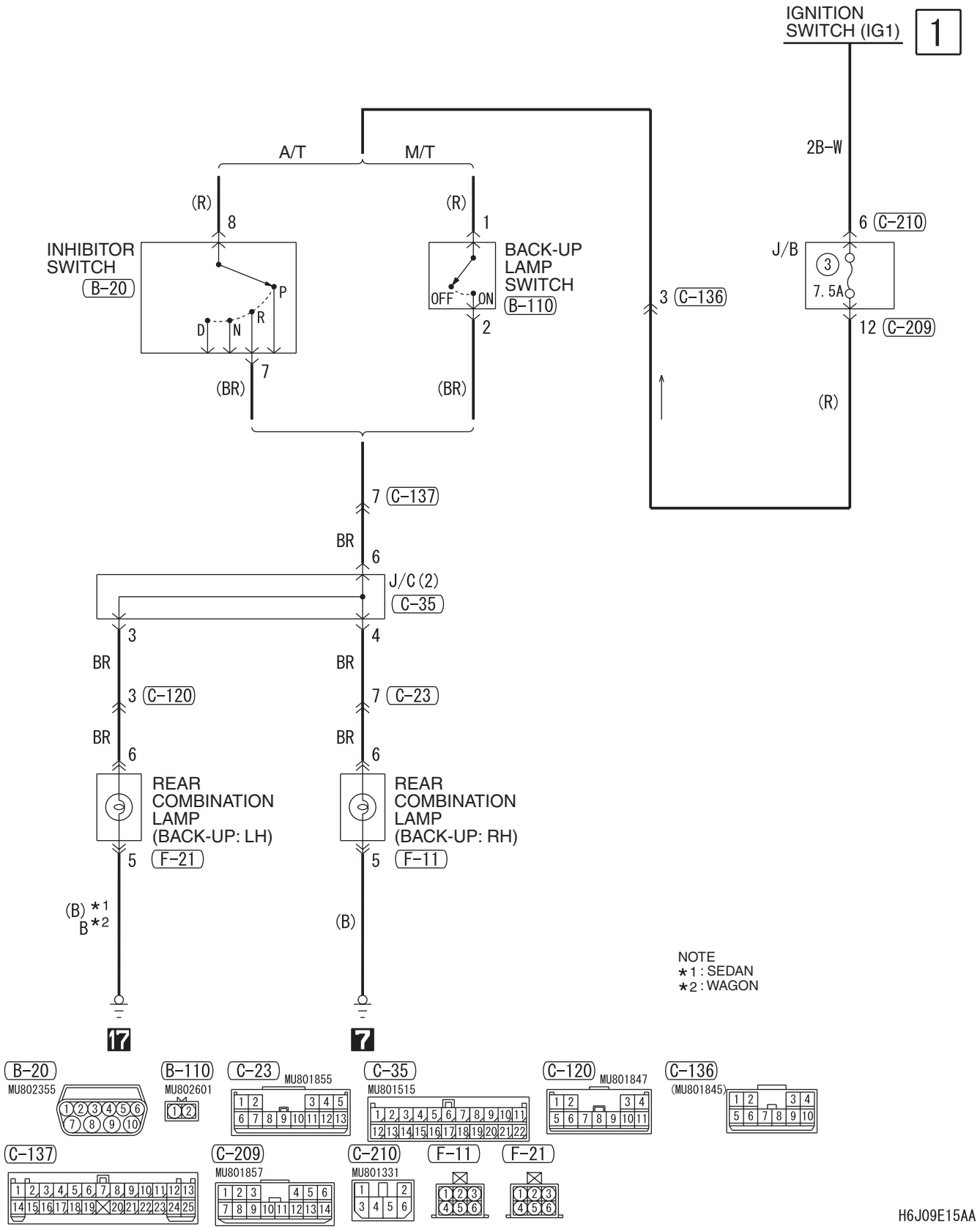

H6J09E15AA

STOP LAMP

STOP LAMP <SEDAN (LHD)>

M1901003001981

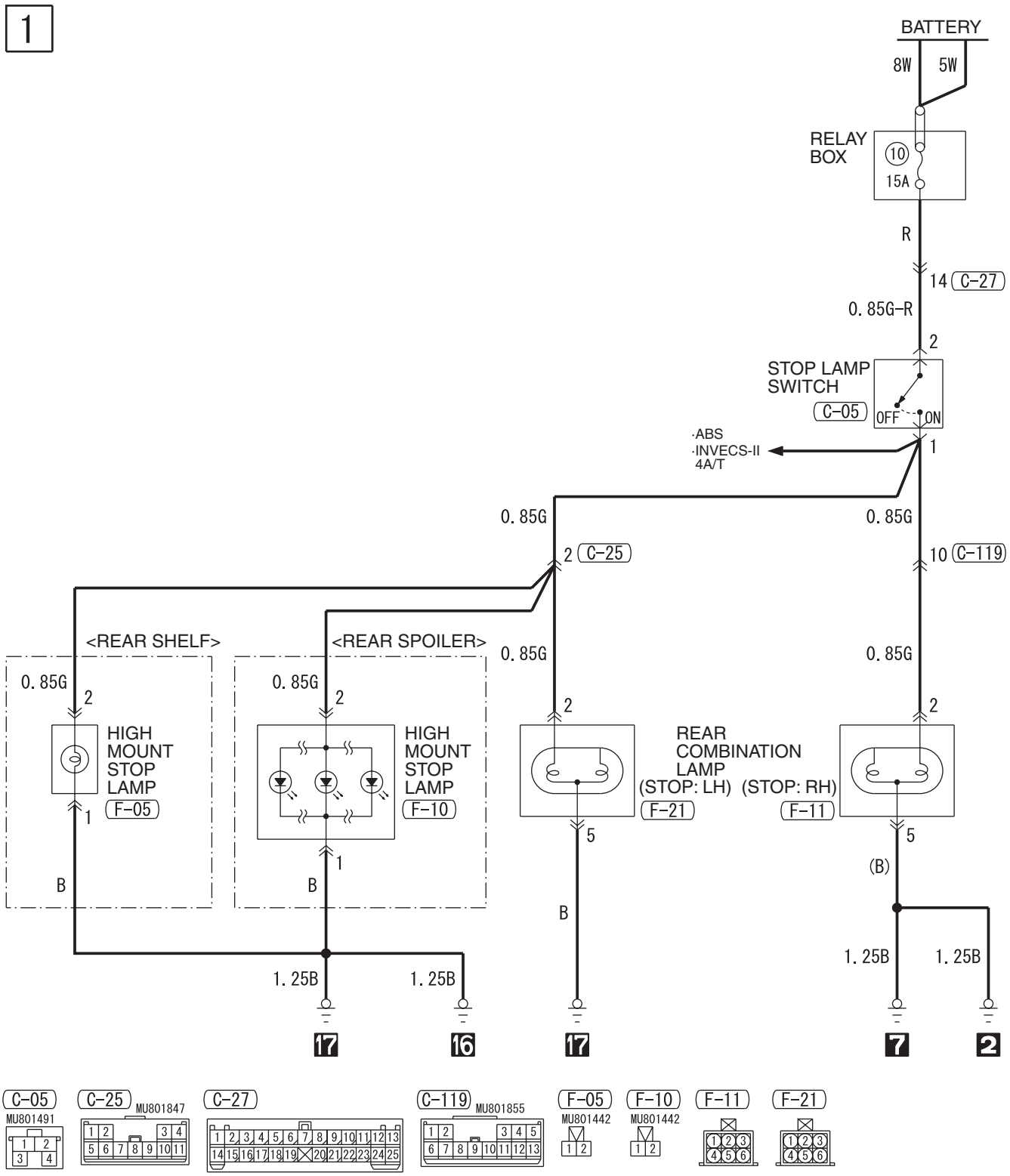

Wire colour code
B : Black LG : Light green G : Green L : Blue W : White Y : Yellow SB : Sky blue
BR : Brown O : Orange GR : Grey R : Red P : Pink V : Violet PU : Purple

H6J09E16AA

STOP LAMP <SEDAN (RHD)>

M1901003001992

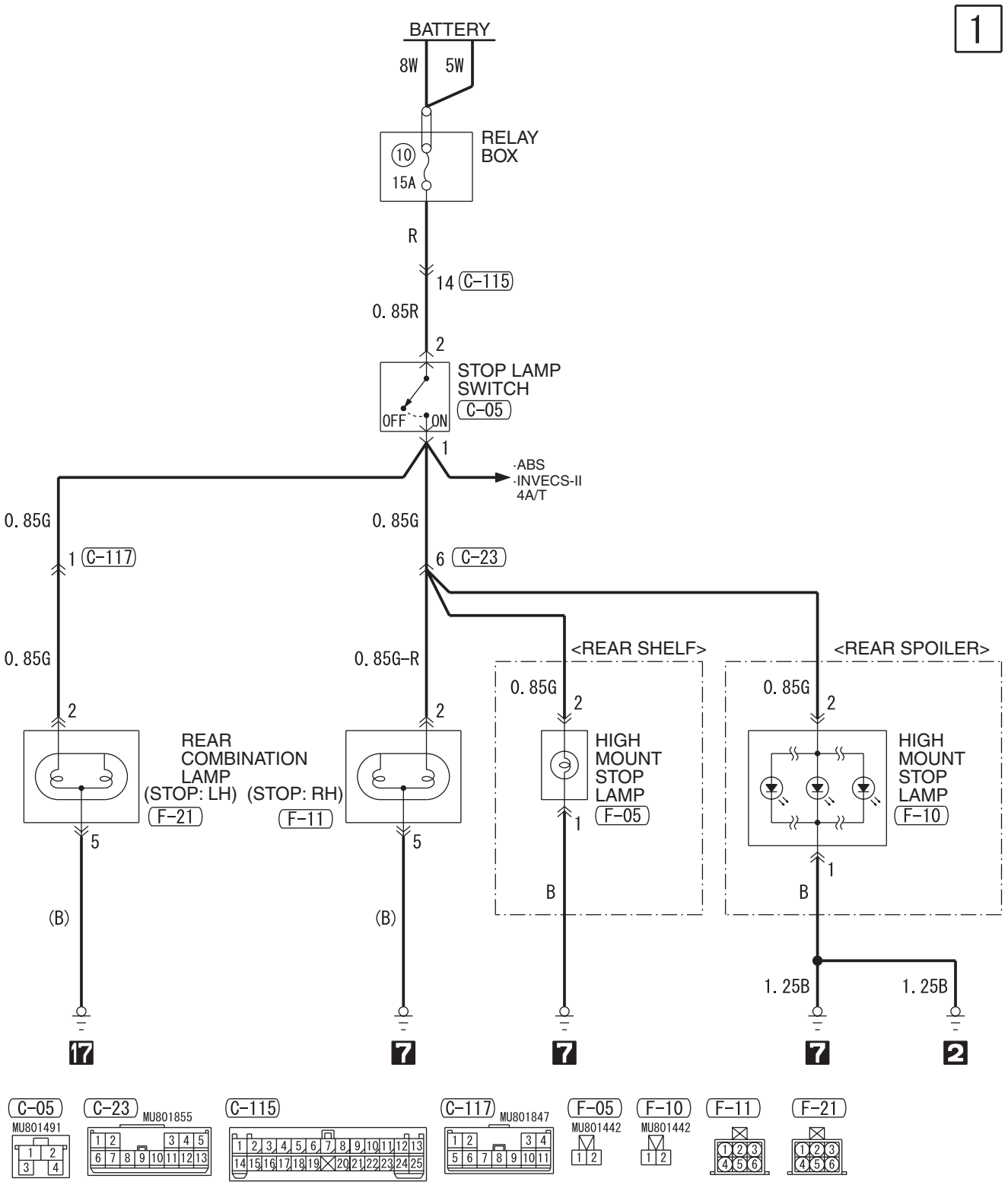

Wire colour code
B : Black LG : Light green G : Green L : Blue W : White Y : Yellow SB : Sky blue
BR : Brown O : Orange GR : Grey R : Red P : Pink V : Violet PU : Purple

H6J09E17AA

STOP LAMP <WAGON (LHD)>

M1901003002003

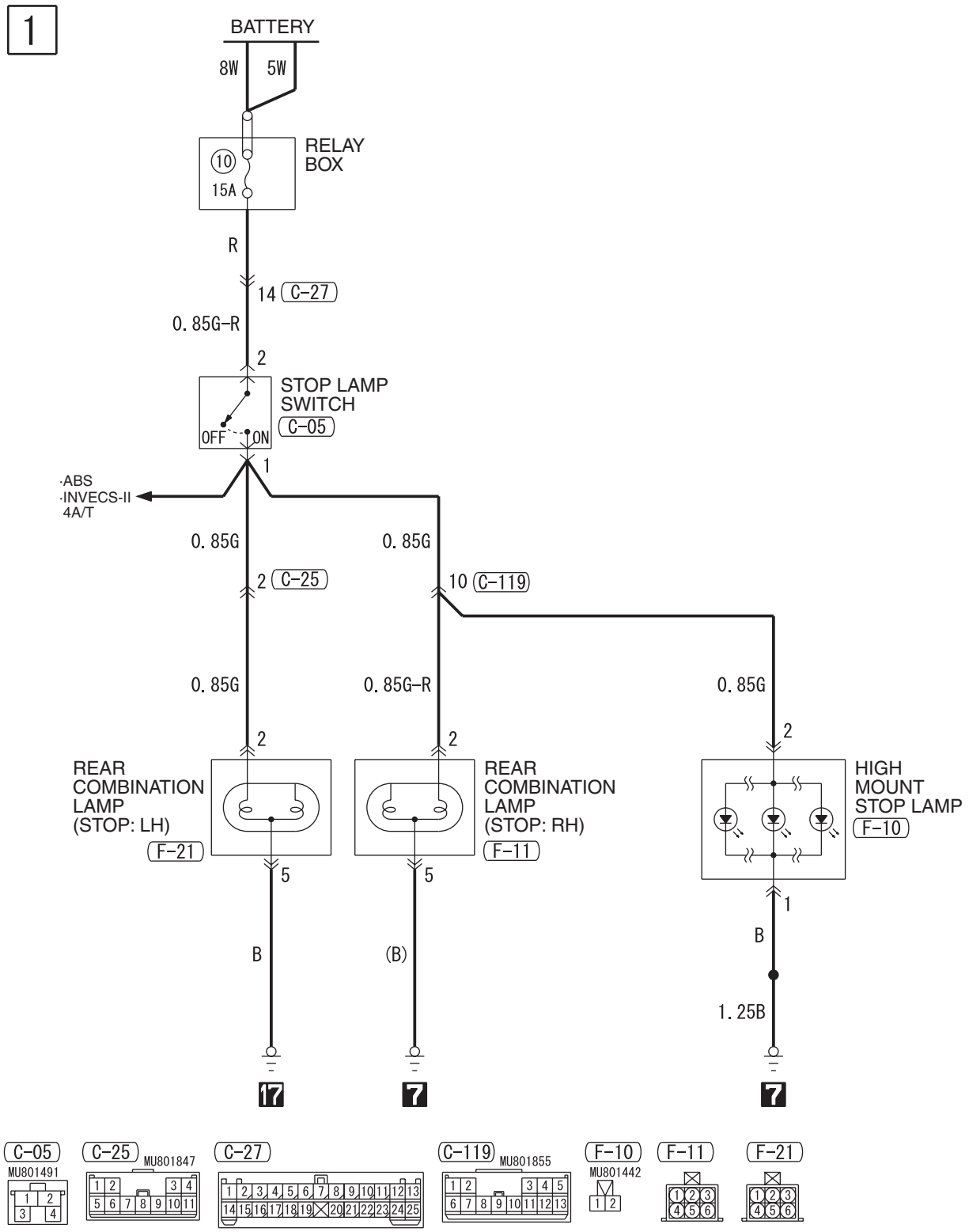

Wire colour code
B : Black LG : Light green G : Green L : Blue W : White Y : Yellow SB : Sky blue
BR : Brown O : Orange GR : Grey R : Red P : Pink V : Violet PU : Purple

H6J09E18AA

STOP LAMP <WAGON (RHD)>

M1901003002014

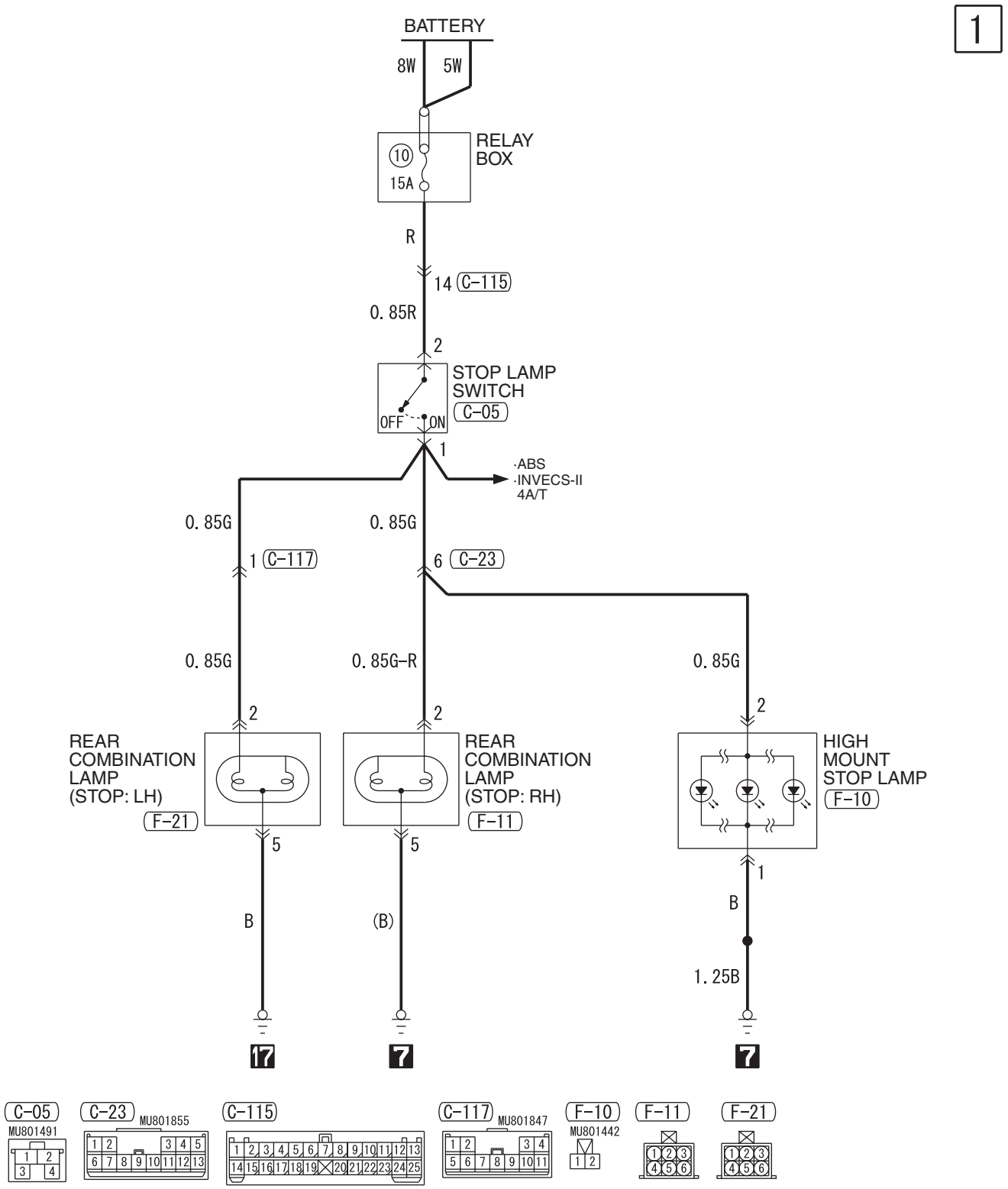

Wire colour code
B : Black LG : Light green G : Green L : Blue W : White Y : Yellow SB : Sky blue
BR : Brown O : Orange GR : Grey R : Red P : Pink V : Violet PU : Purple

H6J09E19AA

HORN

M1901003301517

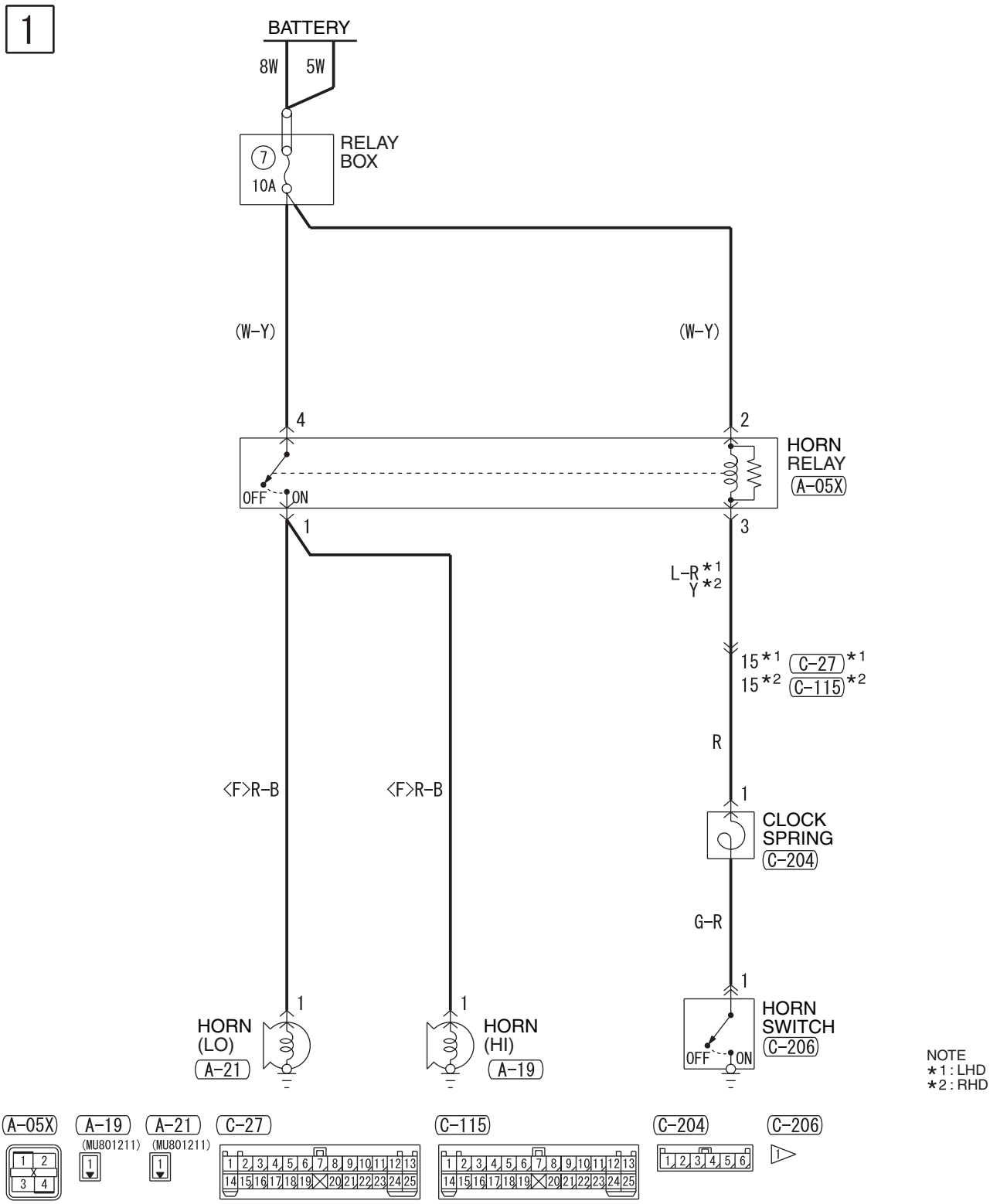

Wire colour code
B : Black LG : Light green G : Green L : Blue W : White Y : Yellow SB : Sky blue
BR : Brown O : Orange GR : Grey R : Red P : Pink V : Violet PU : Purple

H6J09E20AA

NOTES

METER AND GAUGE

METER AND GAUGE <LHD>

M1901003502213

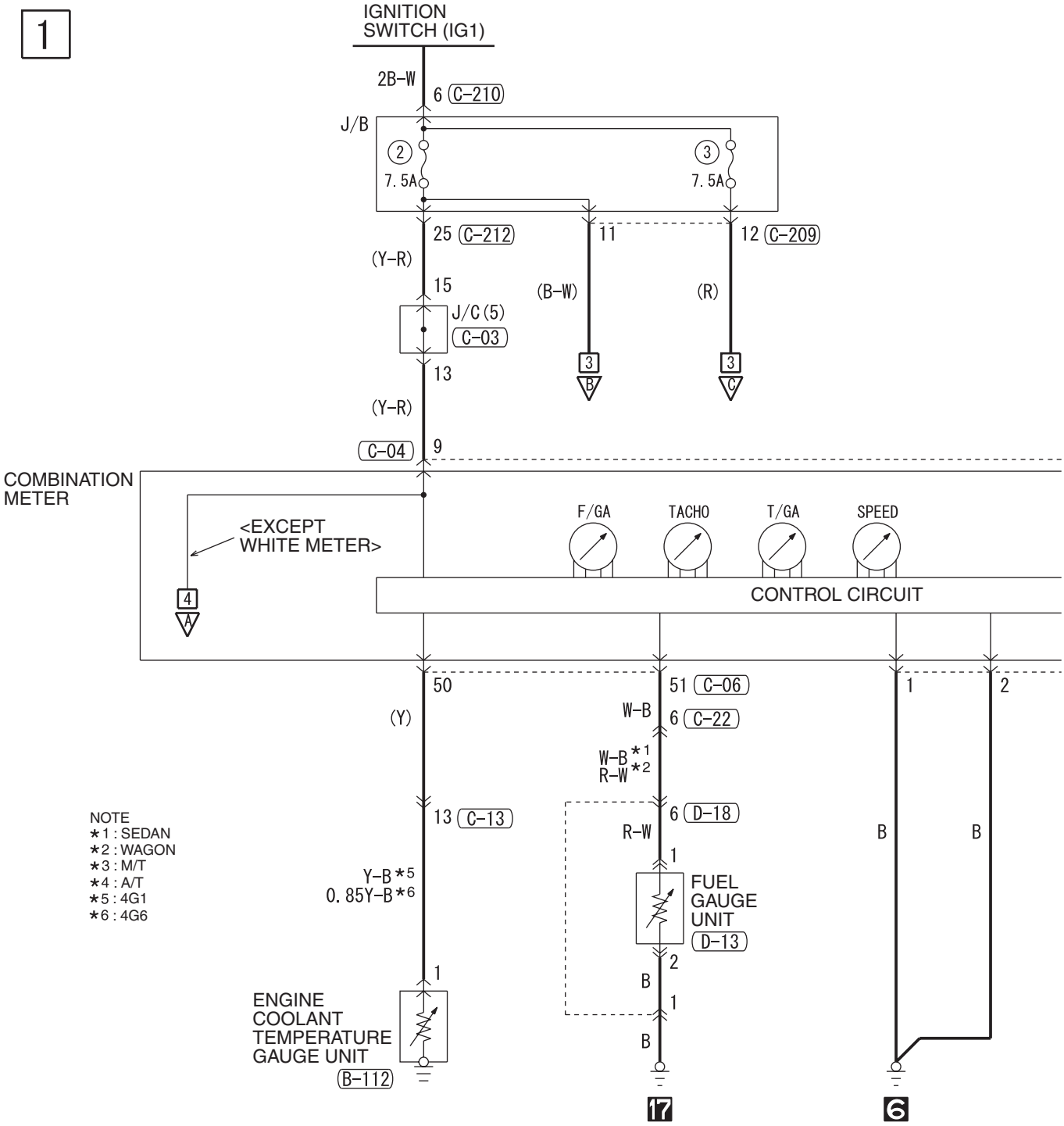

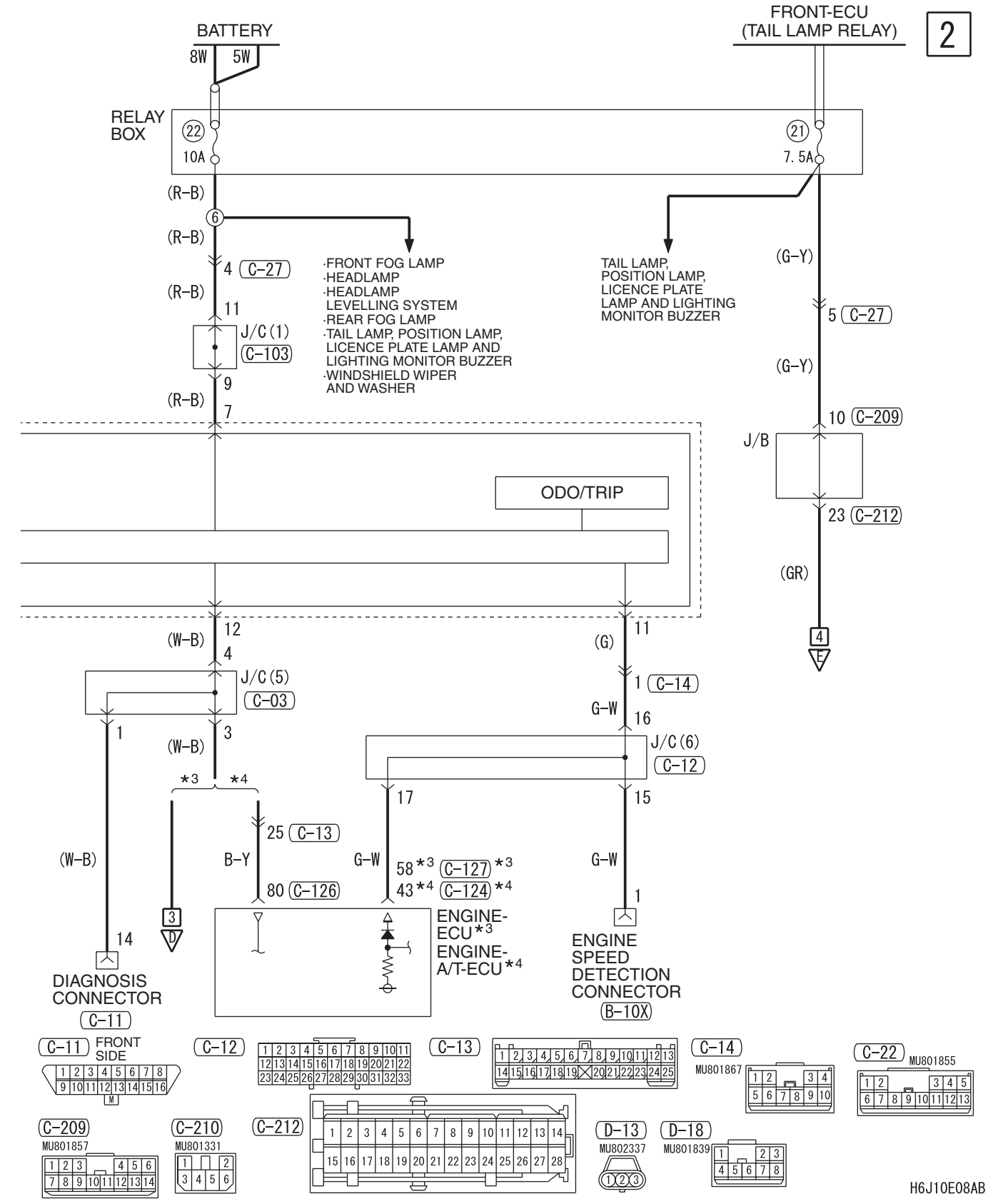
BATTERY
8W
5W
FRONT-ECU
(TAIL LAMP RELAY)
2
RELAY
BOX
22
10A
21
7. 5A
(R-B)
6
(R-B)
4
C-27
(R-B)
11
J/C (1)
C-103
9
(R-B)
7
·FRONT FOG LAMP
·HEADLAMP
·HEADLAMP
LEVELLING SYSTEM
·REAR FOG LAMP
·TAIL LAMP, POSITION LAMP,
LICENCE PLATE LAMP AND
LIGHTING MONITOR BUZZER
·WINDSHIELD WIPER
AND WASHER
TAIL LAMP,
POSITION LAMP,
LICENCE PLATE
LAMP AND LIGHTING
MONITOR BUZZER
(G-Y)
5
C-27
(G-Y)
10
C-209
J/B
23
C-212
(GR)
4
E
ODO/TRIP
(W-B)
12
4
J/C (5)
C-03
1
3
(W-B)
*3
*4
(G)
11
1
C-14
G-W
16
J/C (6)
C-12
17
15
25
C-13
(W-B)
B-Y
G-W
58 *3
C-127 *3
43 *4
C-124 *4
G-W
80
C-126
1
3
D
14
ENGINE-
ECU *3
ENGINE-
A/T-ECU *4
ENGINE
SPEED
DETECTION
CONNECTOR
B-10X
DIAGNOSIS
CONNECTOR
C-11
C-11
FRONT
SIDE
C-12
C-13
C-14
MU801867
C-22
MU801855
C-209
MU801857
C-210
MU801331
C-212
D-13
MU802337
D-18
MU801839
H6J10E08AB

METER AND GAUGE <LHD> (CONTINUED)

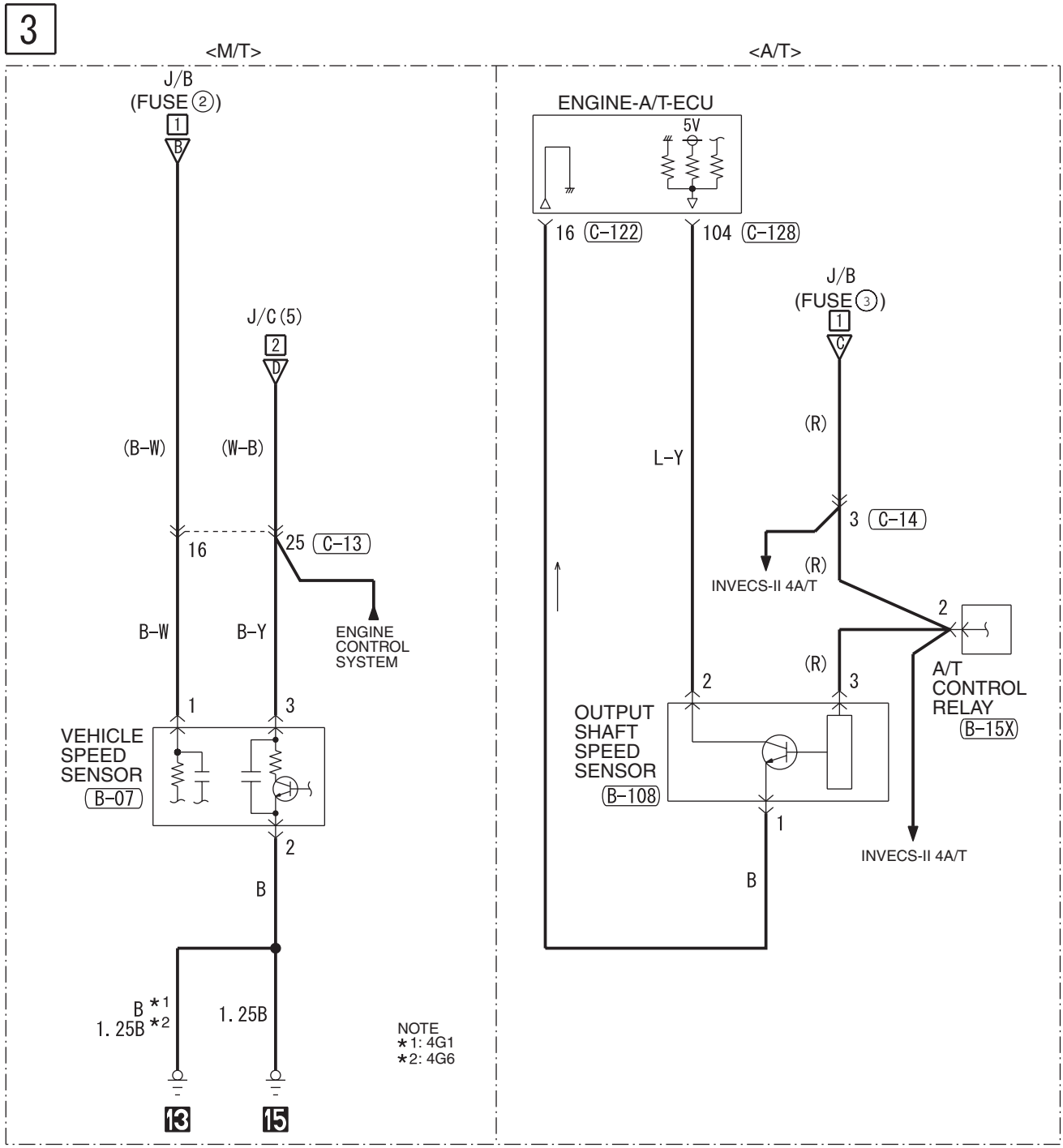

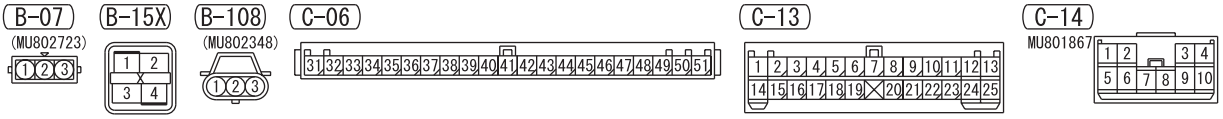

H6J10E08BA

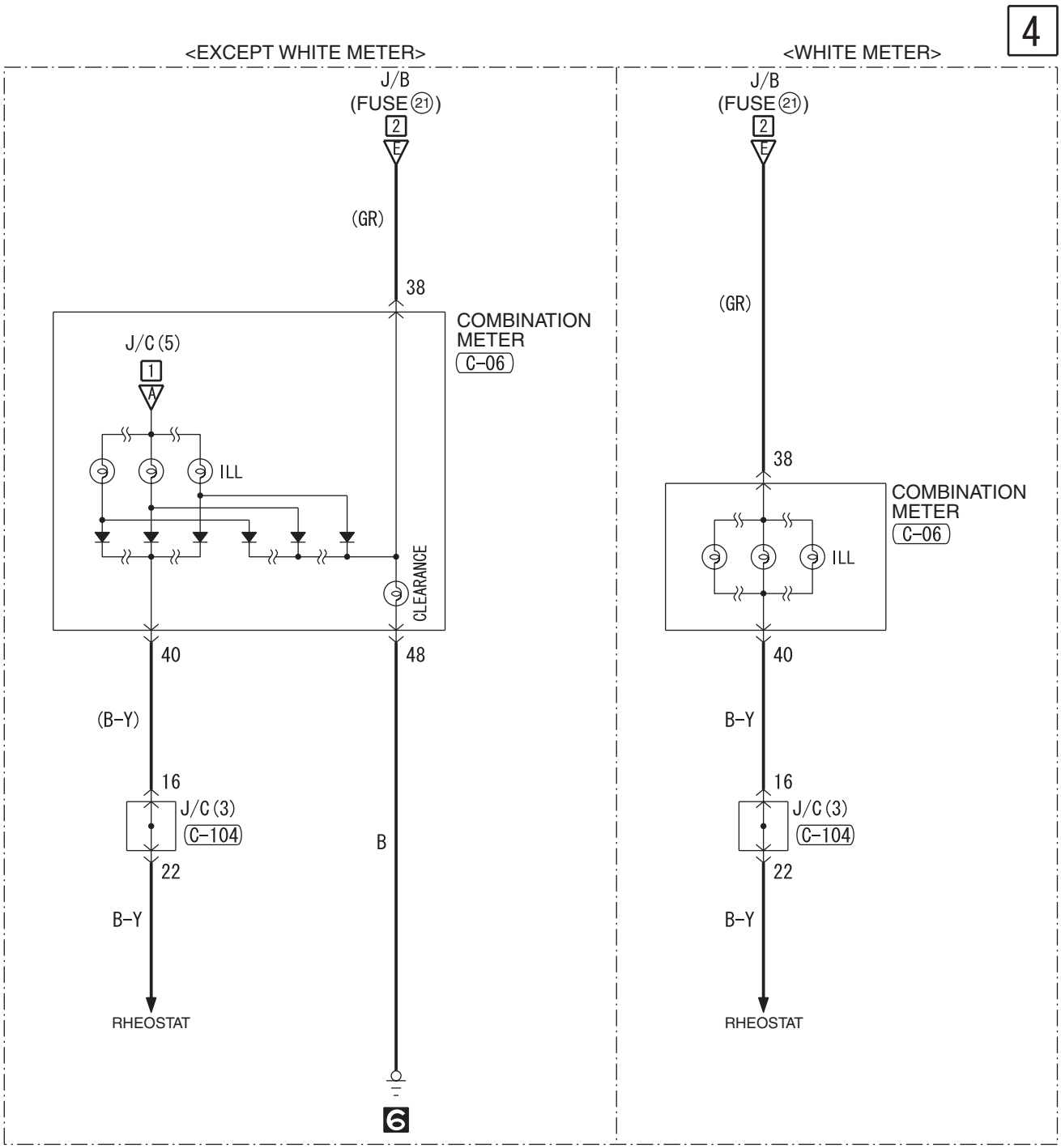

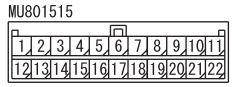

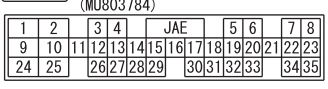

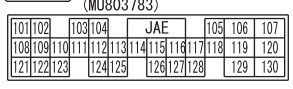

Wire colour code
B : Black LG : Light green G : Green L : Blue W : White Y : Yellow SB : Sky blue
BR : Brown O : Orange GR : Grey R : Red P : Pink V : Violet PU : Purple

H6J10E08BB

METER AND GAUGE <RHD>

M1901003502224

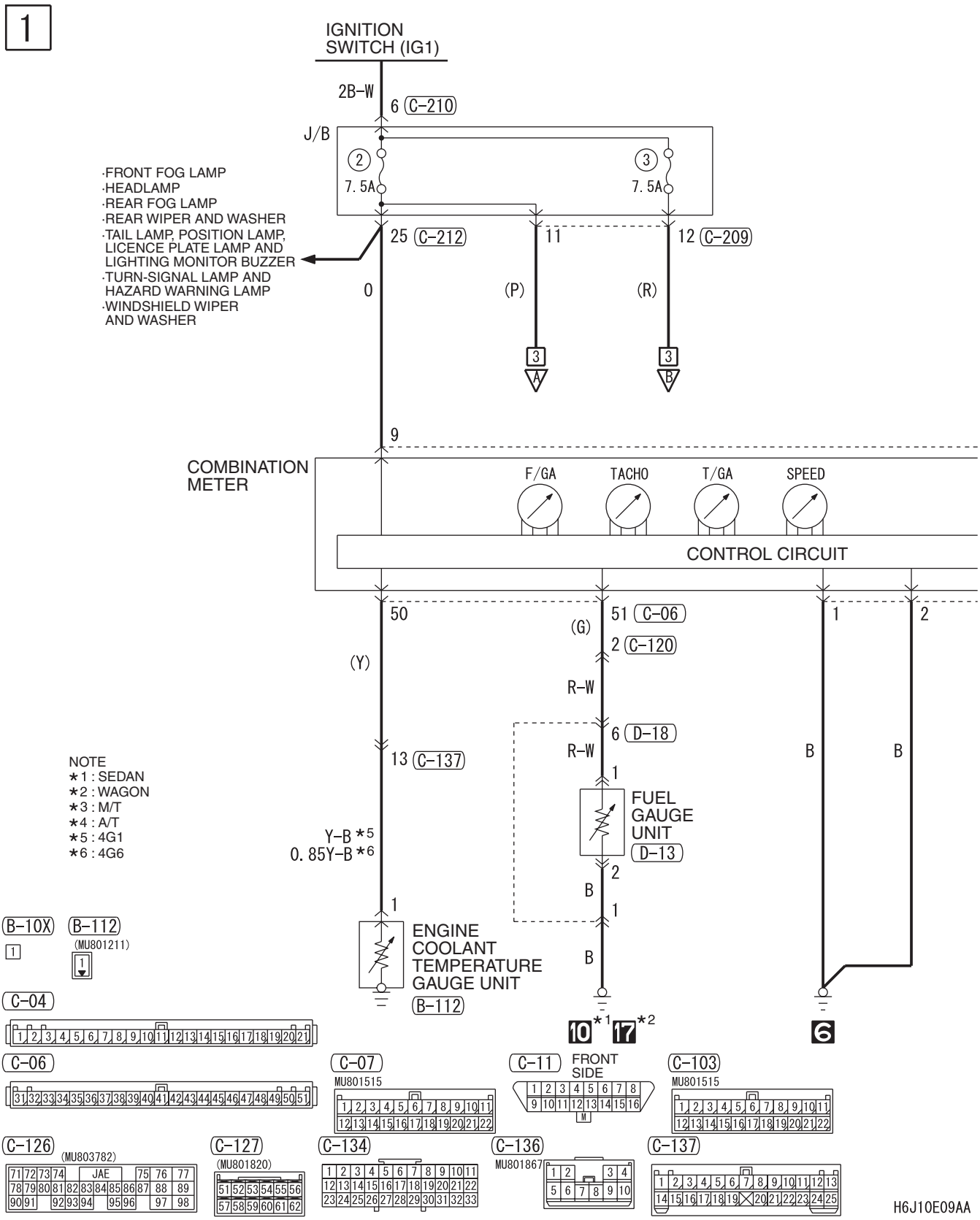

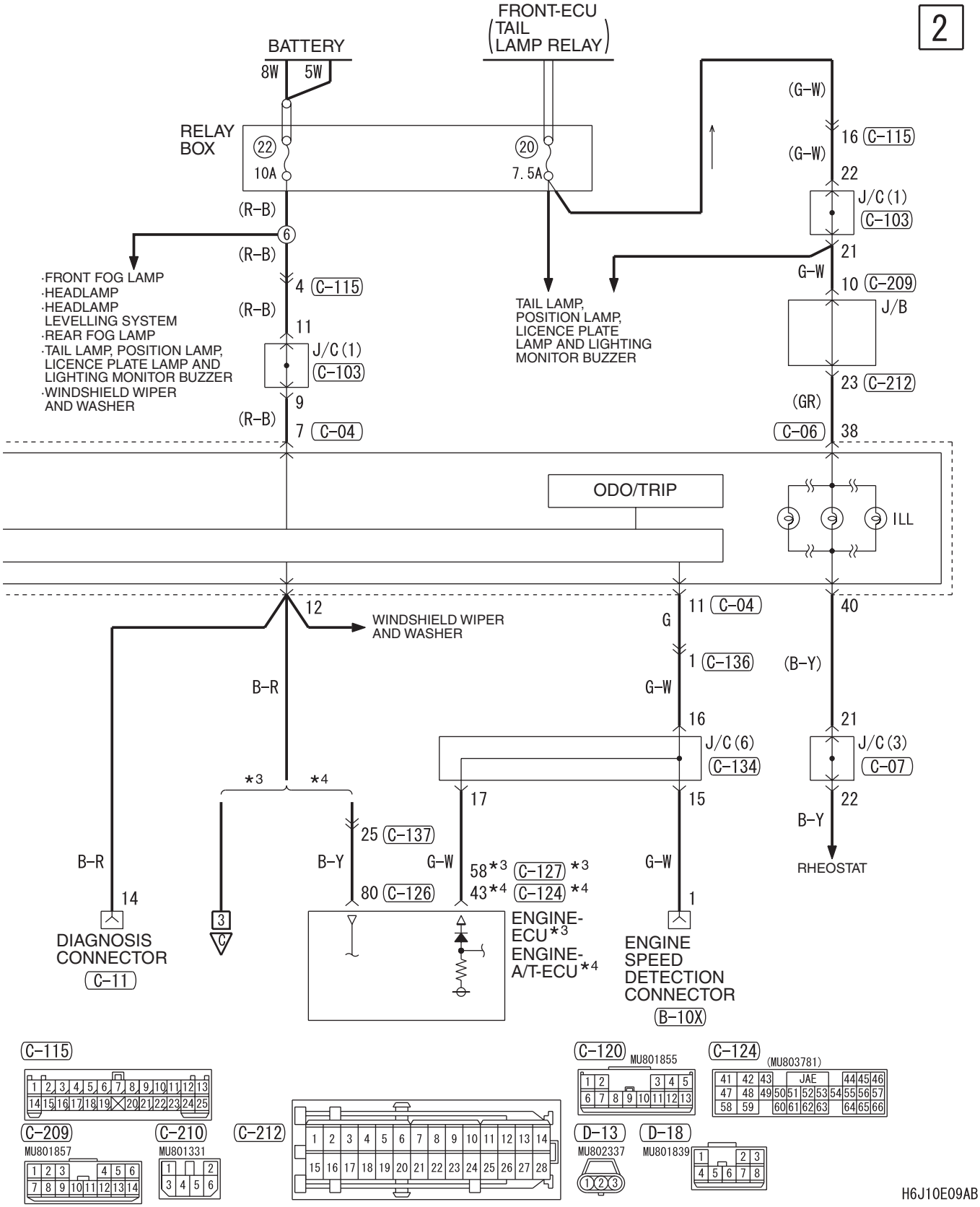
2
BATTERY
8W
5W
FRONT-ECU
(TAIL LAMP RELAY)
RELAY BOX
22
10A
20
7.5A
(G-W)
16 C-115
(G-W)
22
J/C (1)
C-103
(R-B)
6
(R-B)
21
G-W
10 C-209
J/B
·FRONT FOG LAMP
·HEADLAMP
·HEADLAMP LEVELLING SYSTEM
·REAR FOG LAMP
·TAIL LAMP, POSITION LAMP, LICENCE PLATE LAMP AND LIGHTING MONITOR BUZZER
·WINDSHIELD WIPER AND WASHER
4 C-115
(R-B)
11
J/C (1)
C-103
9
(R-B)
7 C-04
TAIL LAMP, POSITION LAMP, LICENCE PLATE LAMP AND LIGHTING MONITOR BUZZER
23 C-212
(GR)
C-06
38
ODO/TRIP
ILL
12
WINDSHIELD WIPER AND WASHER
11 C-04
G
40
1 C-136
(B-Y)
B-R
G-W
16
21
J/C (6)
C-134
J/C (3)
C-07
*3
*4
17
15
22
B-Y
25 C-137
B-R
B-Y
G-W
58*3 C-127 *3
43*4 C-124 *4
G-W
RHEOSTAT
14
80 C-126
1
DIAGNOSIS CONNECTOR
C-11
ENGINE-ECU*3
ENGINE-A/T-ECU*4
ENGINE SPEED DETECTION CONNECTOR
B-10X
C-115
C-120
MU801855
C-124
(MU803781)
JAE
C-209
MU801857
C-210
MU801331
C-212
D-13
MU802337
D-18
MU801839
H6J10E09AB

METER AND GAUGE <RHD> (CONTINUED)

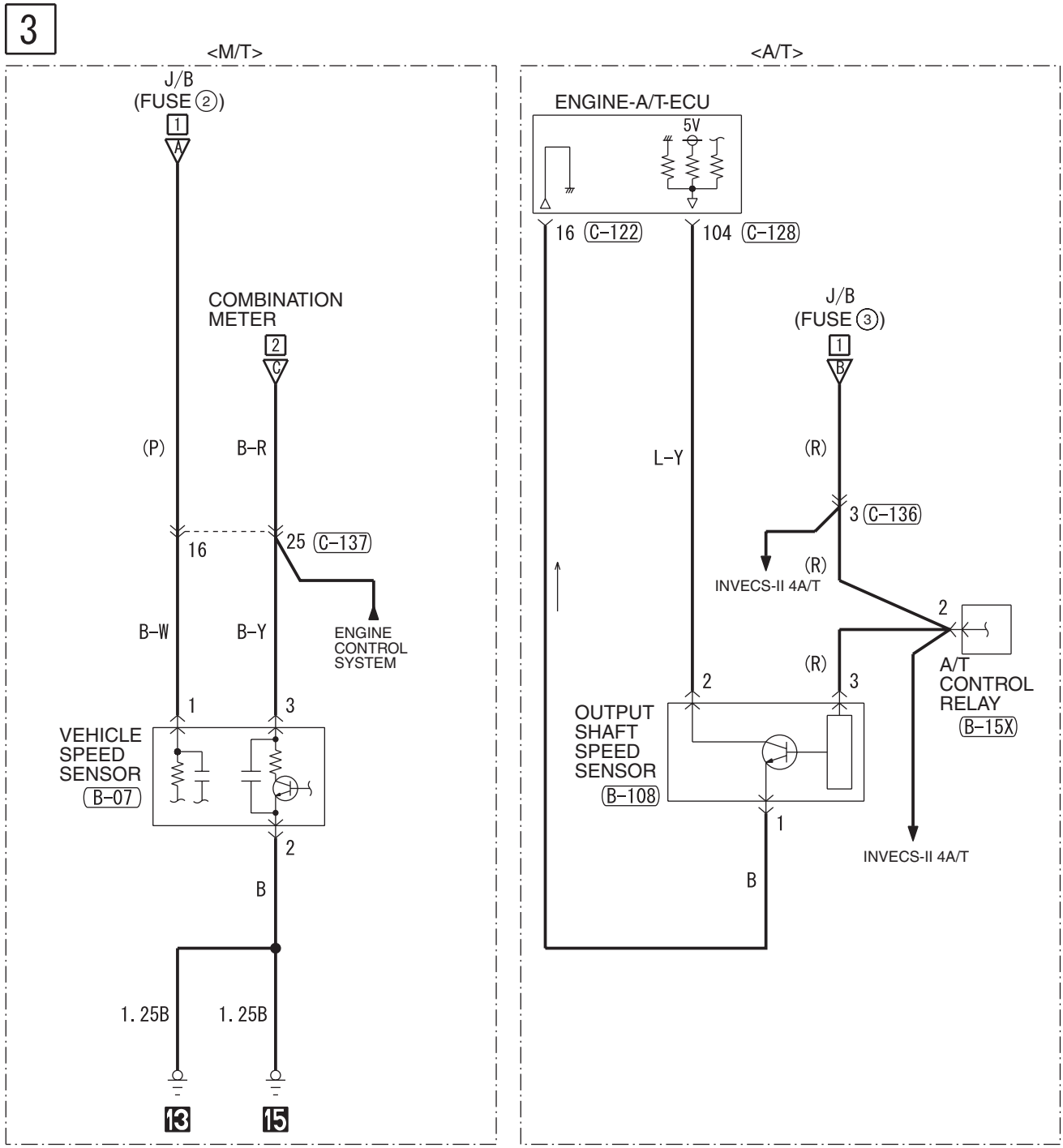

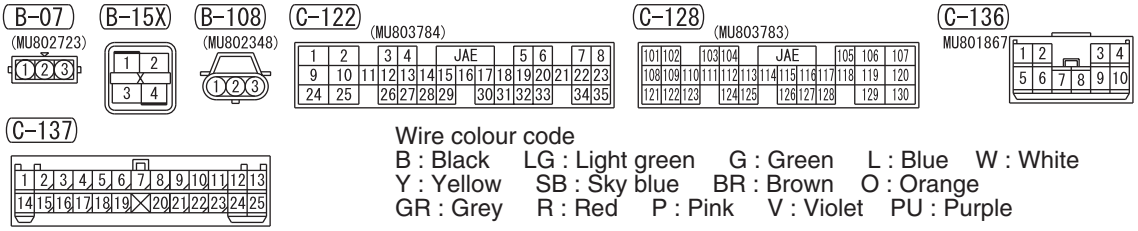

Wire colour code
B : Black LG : Light green G : Green L : Blue W : White
Y : Yellow SB : Sky blue BR : Brown O : Orange
GR : Grey R : Red P : Pink V : Violet PU : Purple

H6J10E09BA

NOTES

FUEL WARNING LAMP, OIL PRESSURE WARNING LAMP AND BRAKE WARNING LAMP

FUEL WARNING LAMP, OIL PRESSURE WARNING LAMP AND BRAKE WARNING LAMP <LHD>

M1901018700444

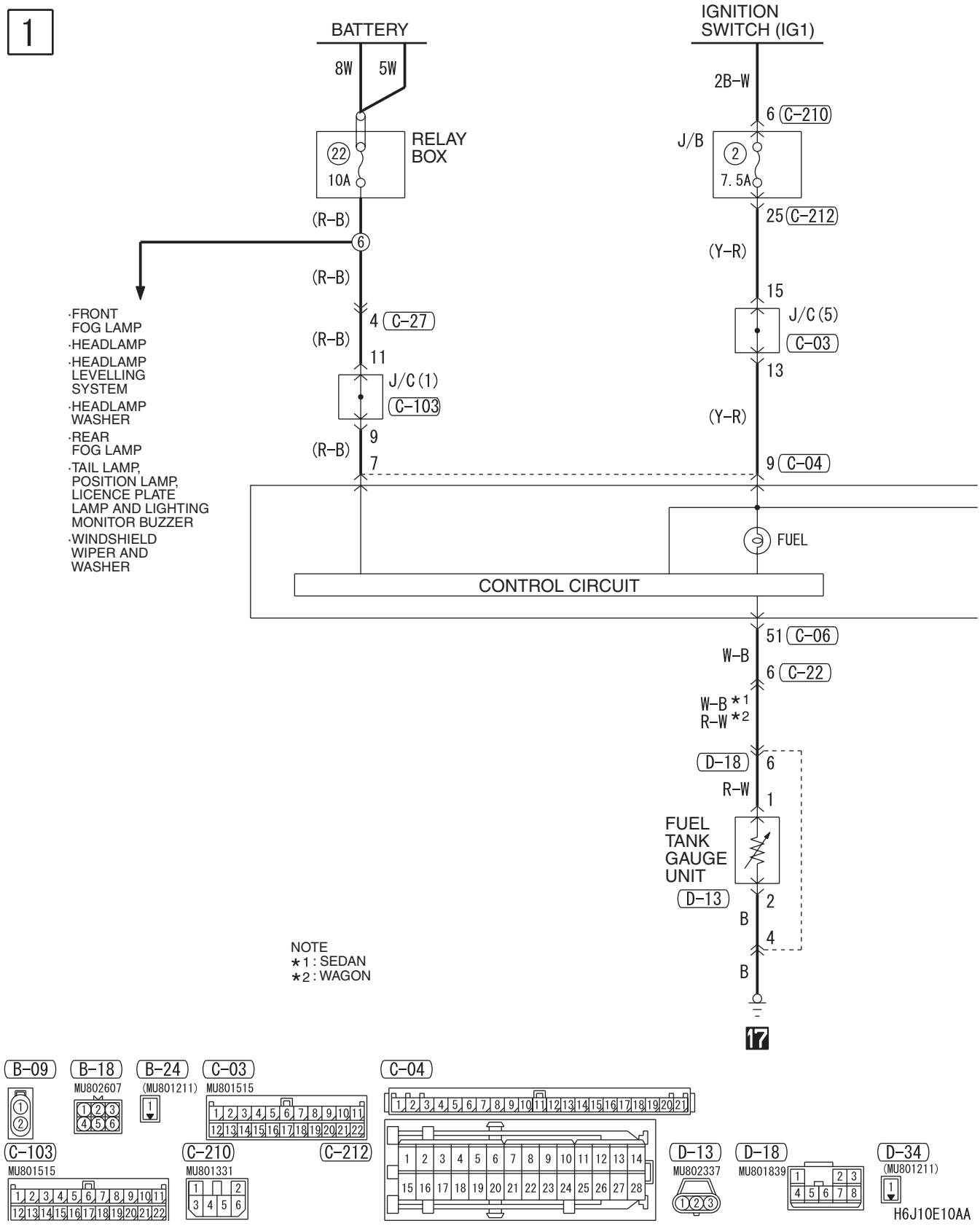

2

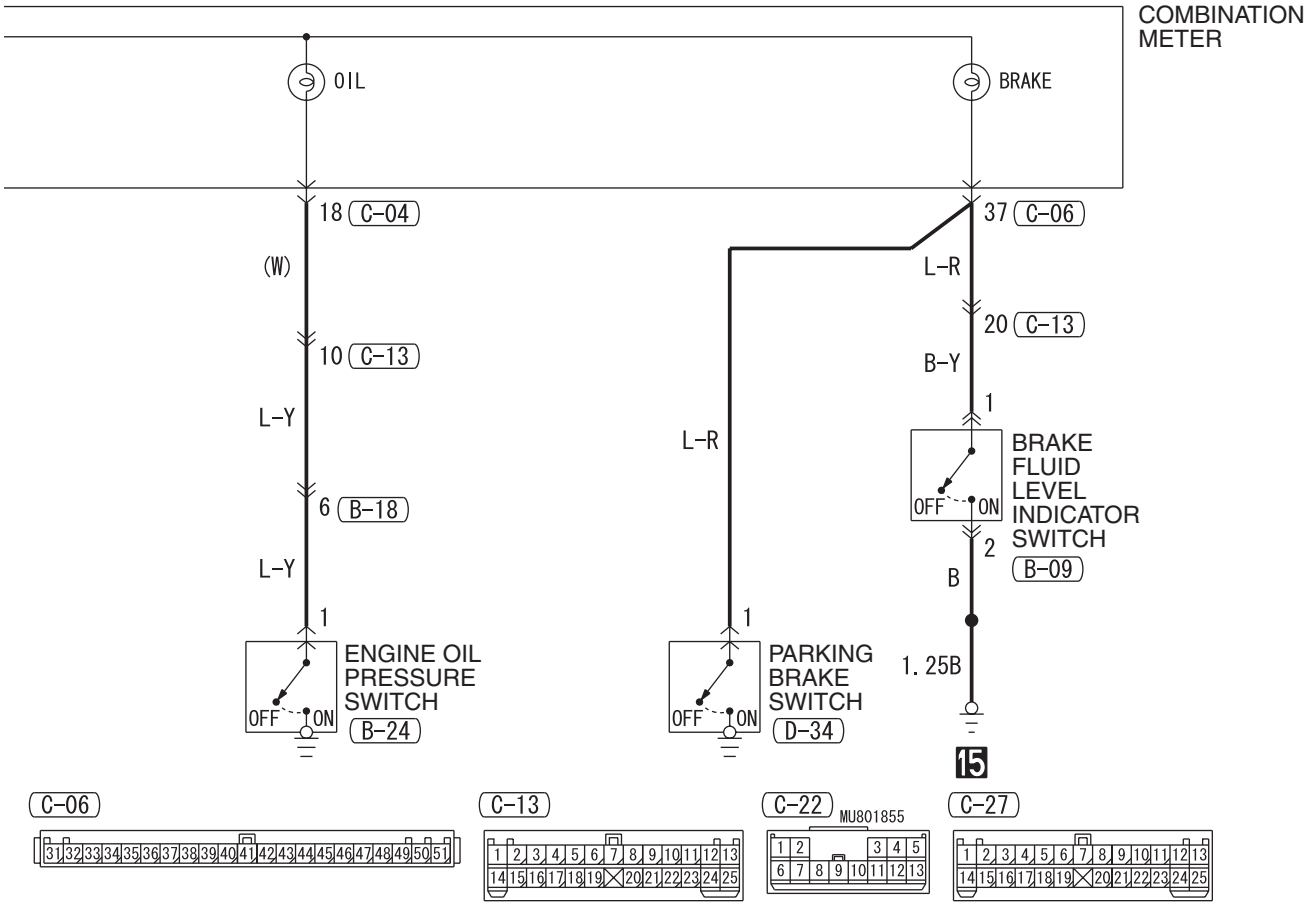

Wire colour code
B : Black LG : Light green G : Green L : Blue W : White Y : Yellow SB : Sky blue
BR : Brown O : Orange GR : Grey R : Red P : Pink V : Violet PU : Purple

H6J10E10AB

FUEL WARNING LAMP, OIL PRESSURE WARNING LAMP AND BRAKE WARNING LAMP <RHD>

M1901018700455

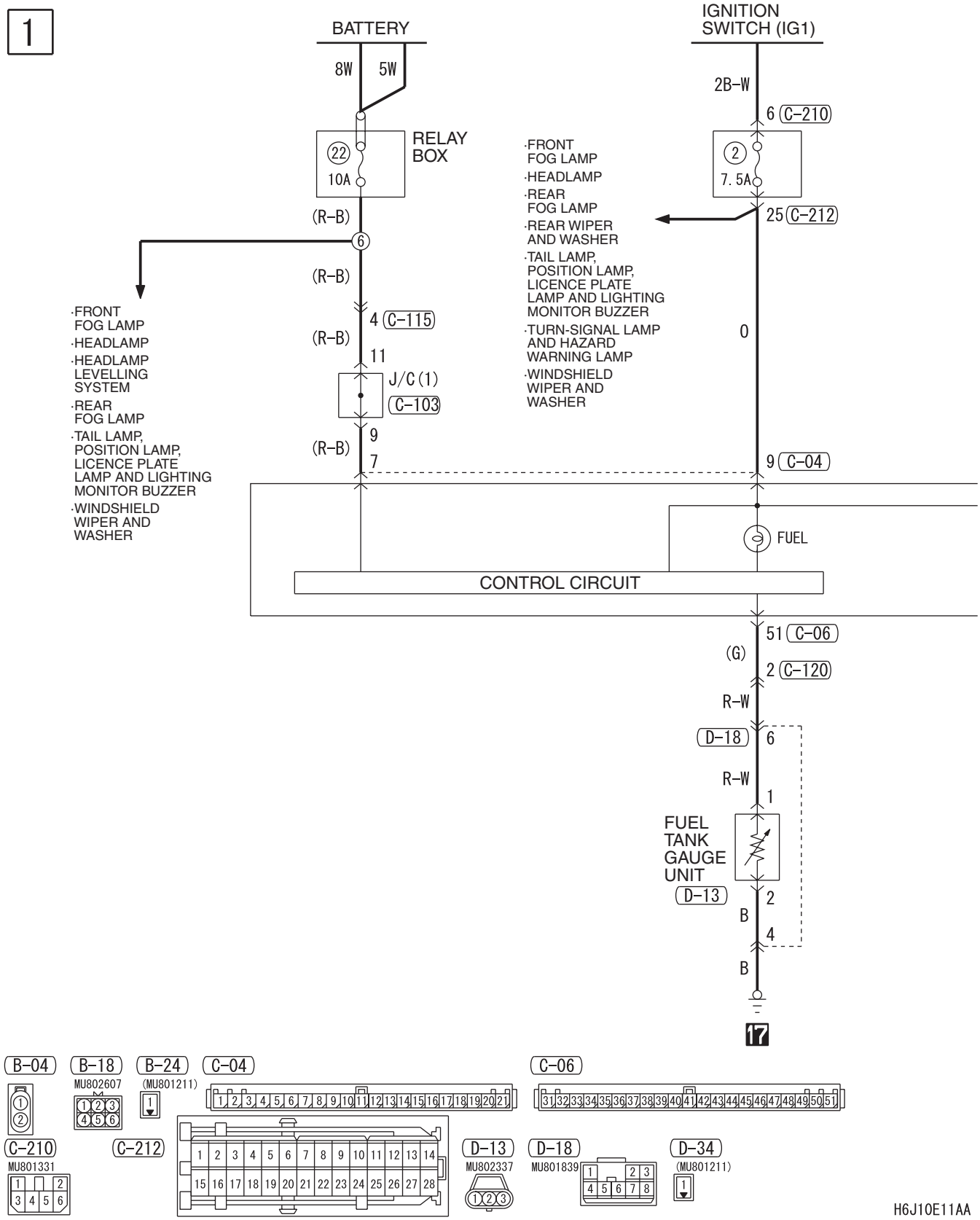

2

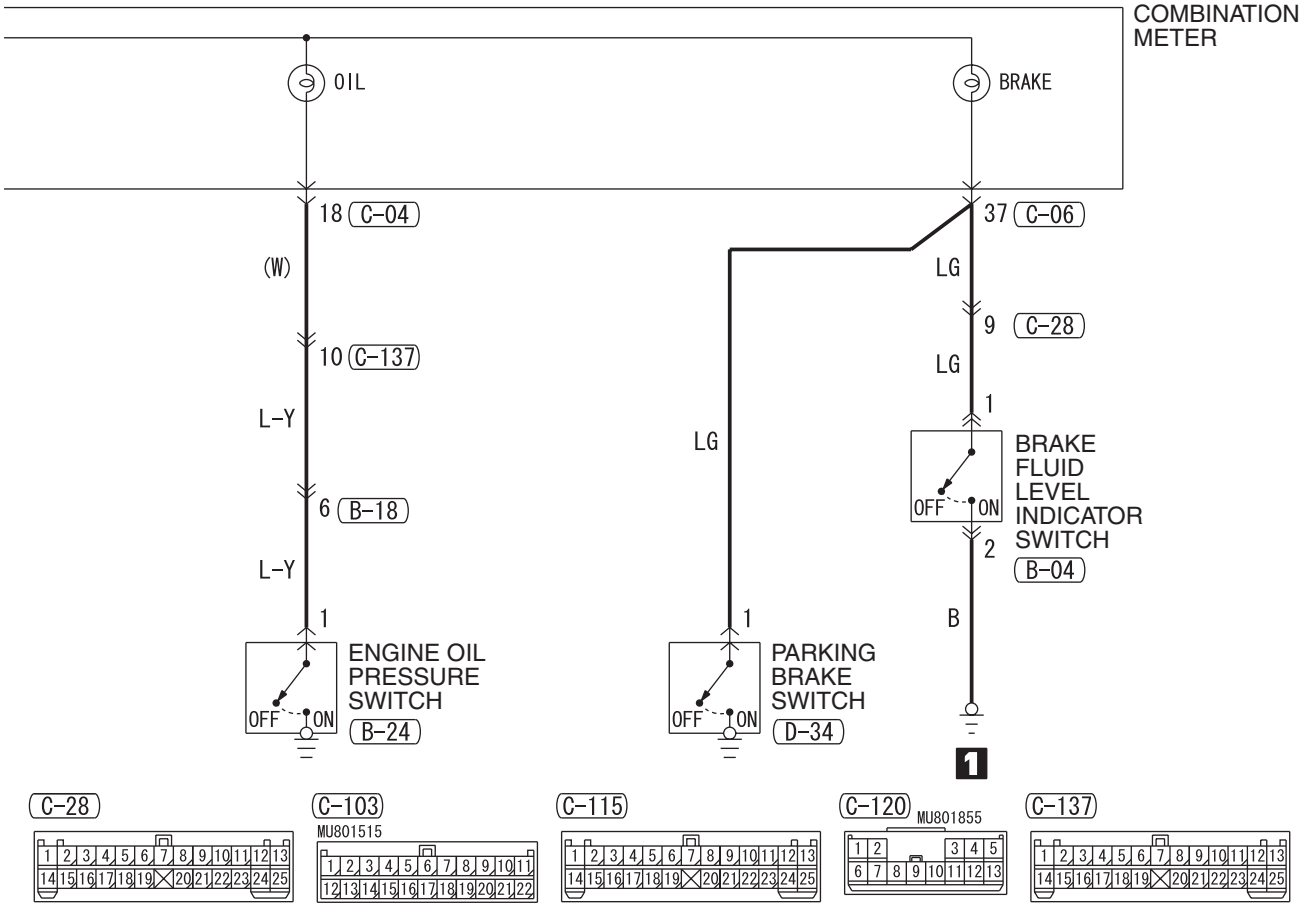

Wire colour code
B : Black LG : Light green G : Green L : Blue W : White Y : Yellow SB : Sky blue
BR : Brown O : Orange GR : Grey R : Red P : Pink V : Violet PU : Purple

H6J10E11AB

POWER WINDOWS <LHD>

M1901004602127

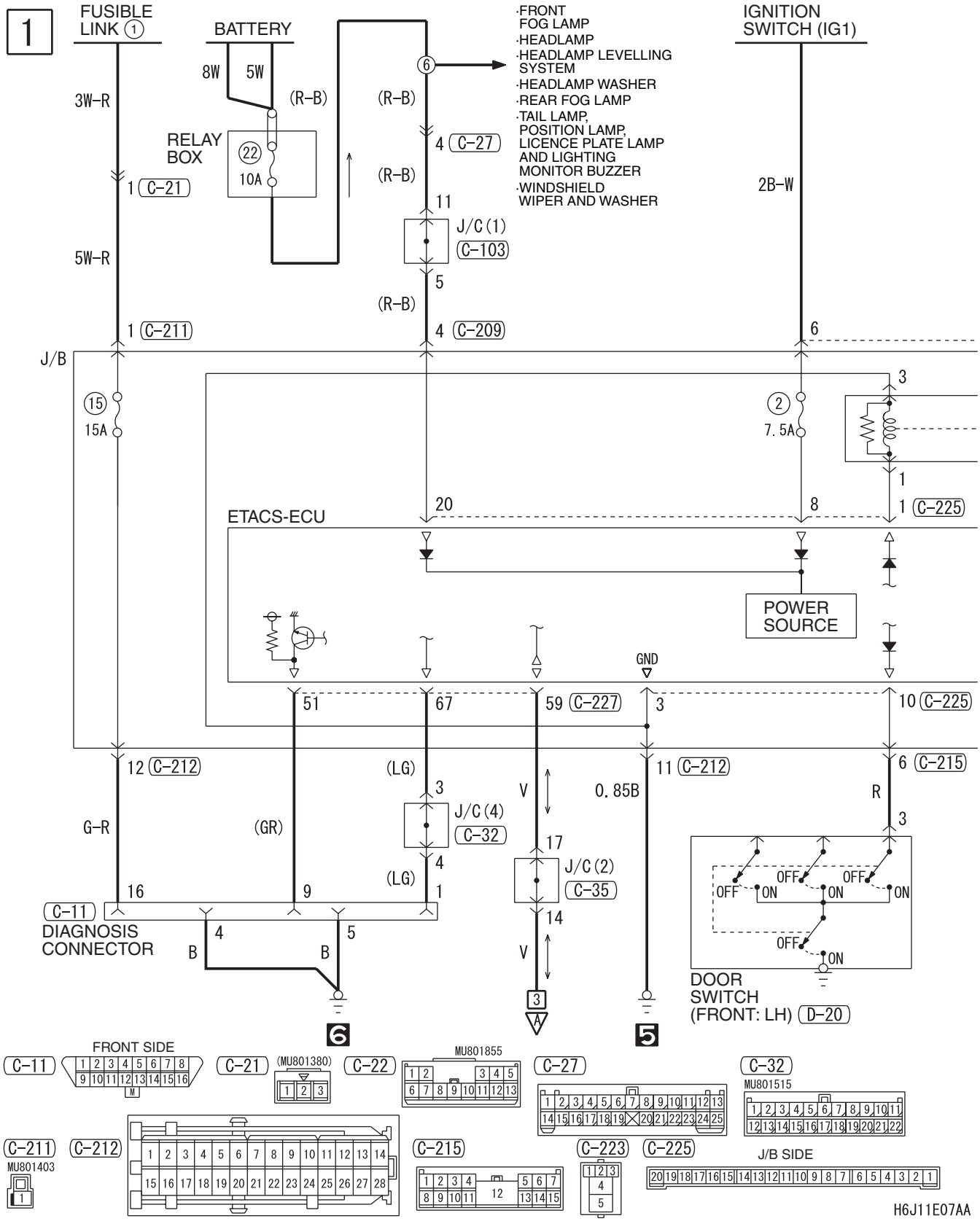

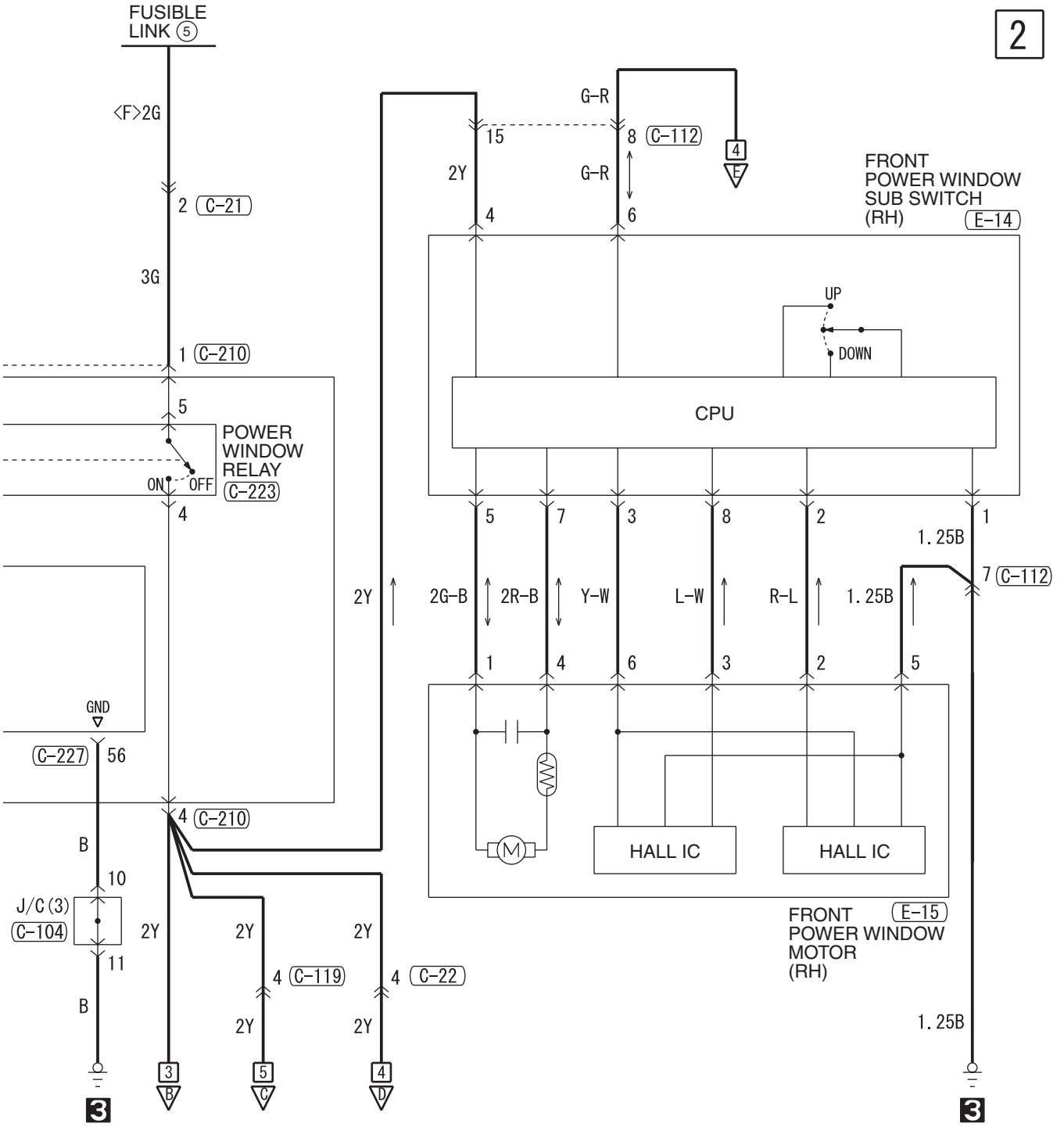
FUSIBLE LINK 5
2
<F>2G
2 C-21
3G
1 C-210
5
POWER WINDOW RELAY
ON
OFF
C-223
4
GND
C-227
56
4 C-210
B
10
J/C (3)
C-104
11
B
2Y
2Y
2Y
4 C-119
4 C-22
2Y
2Y
3
B
5
C
4
D
3
15
2Y
4
G-R
8 C-112
G-R
6
4
E
FRONT POWER WINDOW SUB SWITCH (RH)
E-14
UP
DOWN
CPU
5
7
3
8
2
1
2G-B
2R-B
Y-W
L-W
R-L
1.25B
1
4
6
3
2
5
1.25B
7 C-112
HALL IC
HALL IC
FRONT POWER WINDOW MOTOR (RH)
E-15
1.25B
3
C-35
MU801515
C-103
MU801515
C-104
MU801515
C-112
C-119
MU801855
C-209
MU801857
C-210
MU801331
C-227
(MU803766)
D-20
(MU801536)
E-14
MU801839
E-15
(MU802758)
Wire colour code
B : Black LG : Light green G : Green L : Blue W : White
Y : Yellow SB : Sky blue BR : Brown O : Orange
GR : Grey R : Red P : Pink V : Violet PU : Purple
H6J11E07AB

POWER WINDOWS <LHD> (CONTINUED)

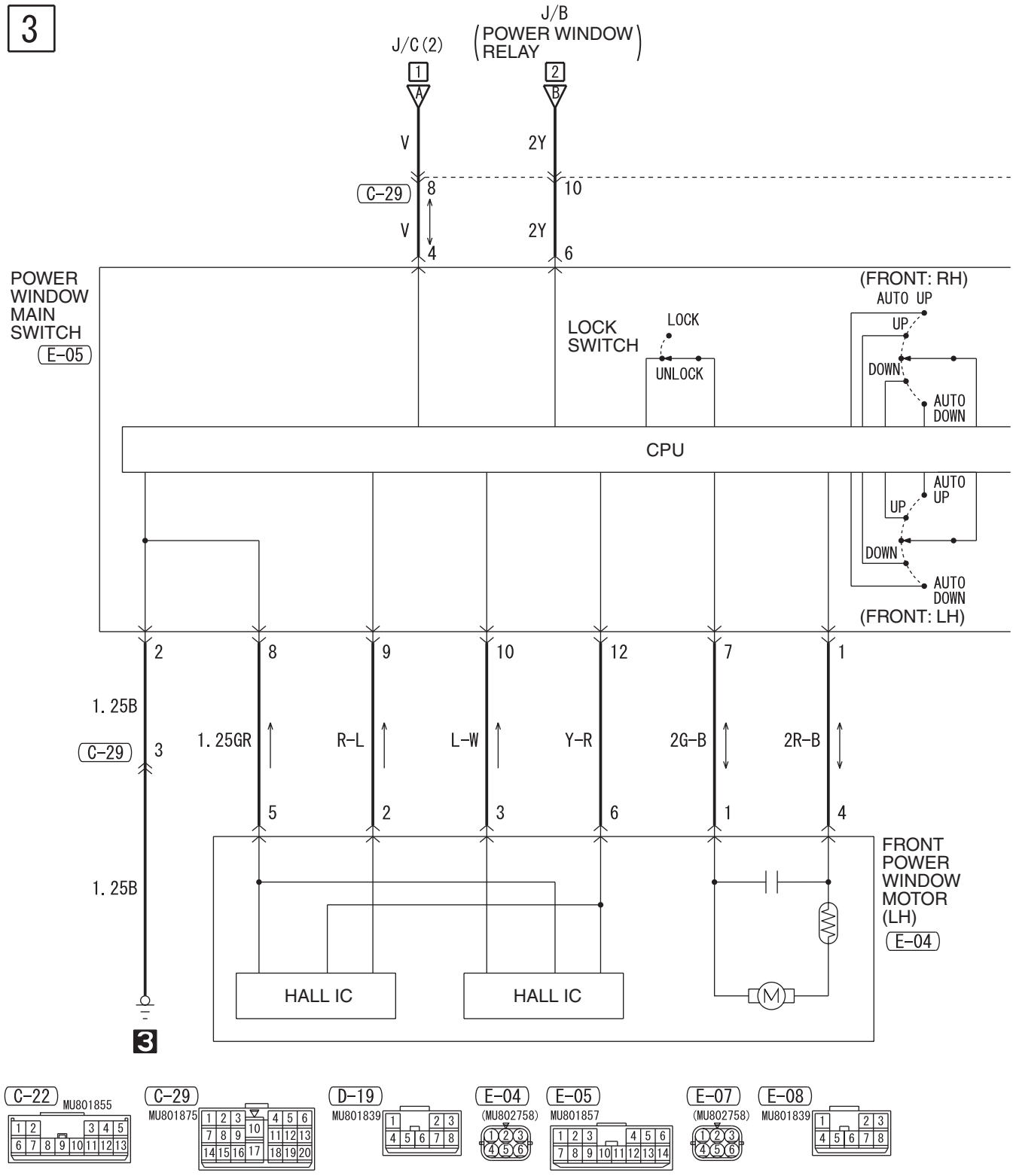

H6J11E07BA

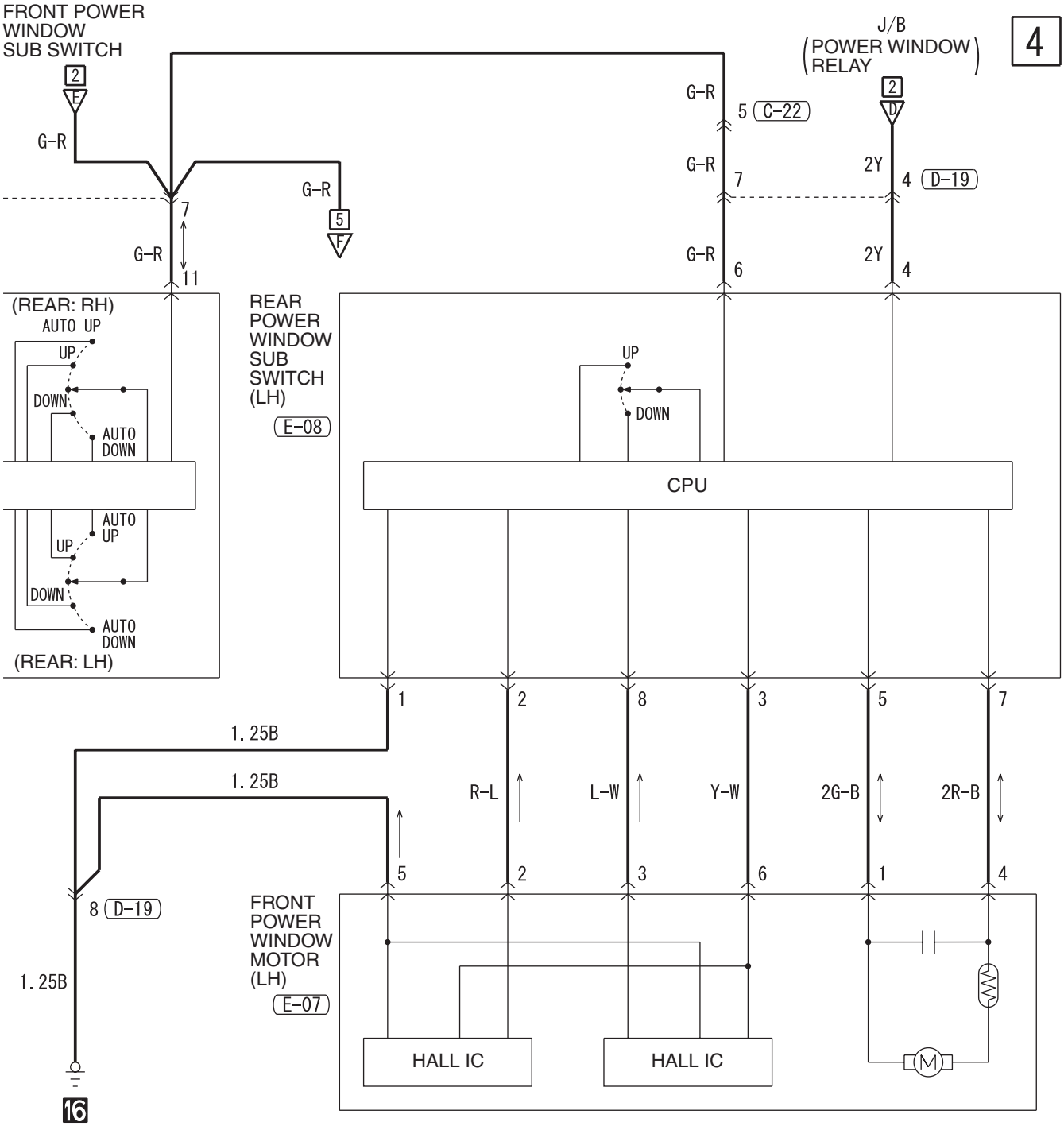

Wire colour code
B : Black LG : Light green G : Green L : Blue W : White Y : Yellow SB : Sky blue
BR : Brown O : Orange GR : Grey R : Red P : Pink V : Violet PU : Purple

H6J11E07BB

POWER WINDOWS <LHD> (CONTINUED)

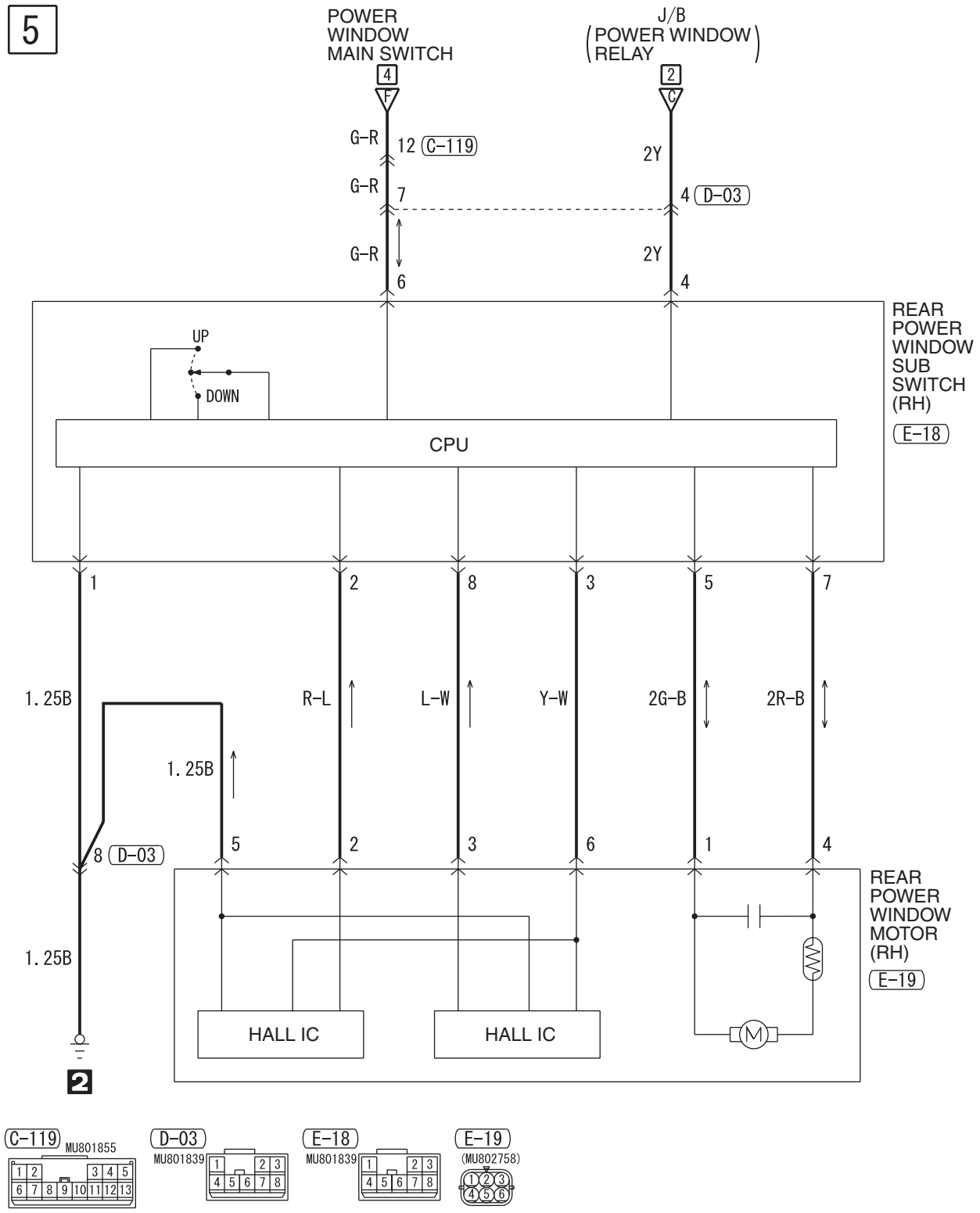

Wire colour code
B : Black LG : Light green G : Green L : Blue W : White Y : Yellow SB : Sky blue
BR : Brown O : Orange GR : Grey R : Red P : Pink V : Violet PU : Purple

H6J11E07CA

NOTES

POWER WINDOWS <RHD>

M1901004602138

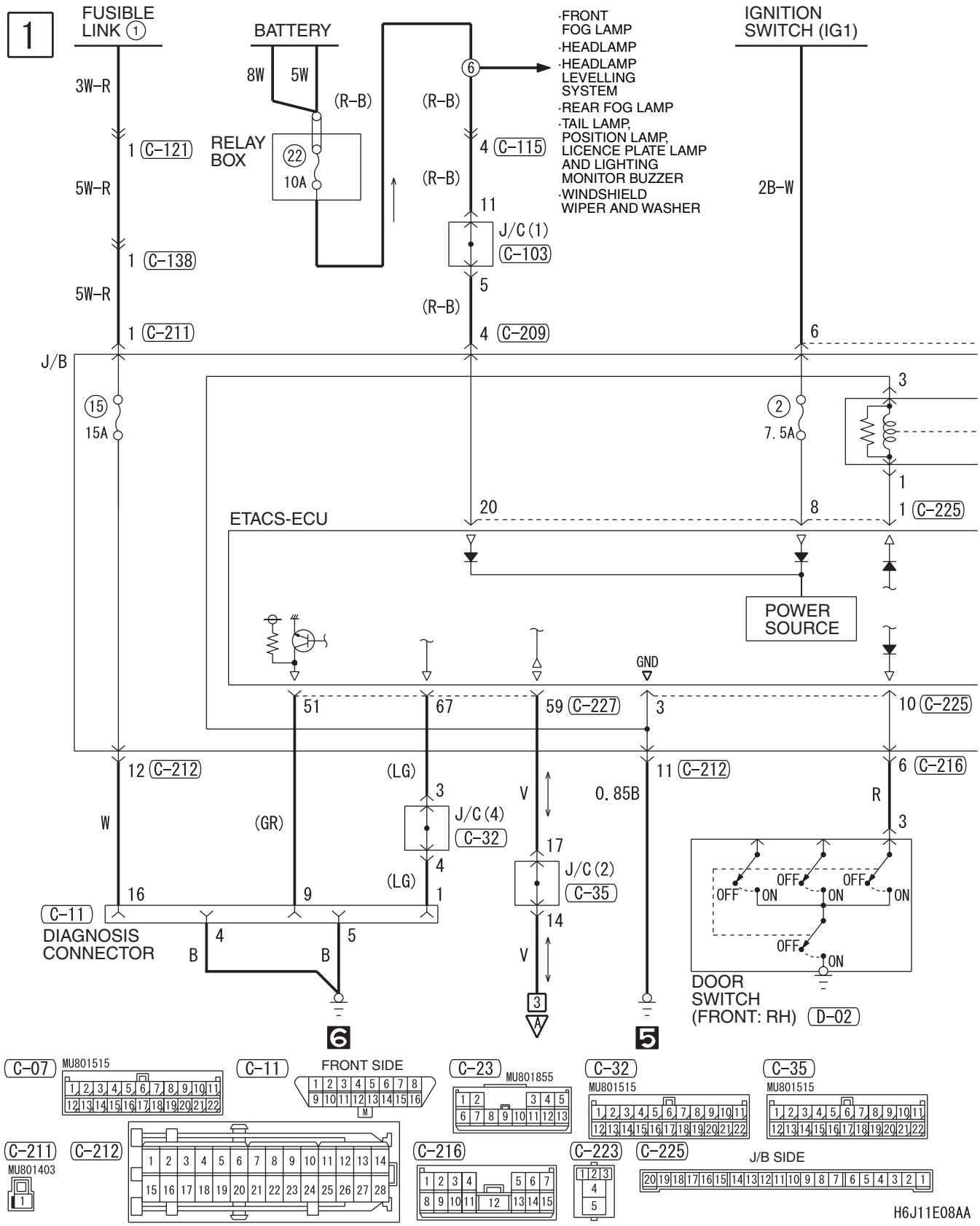

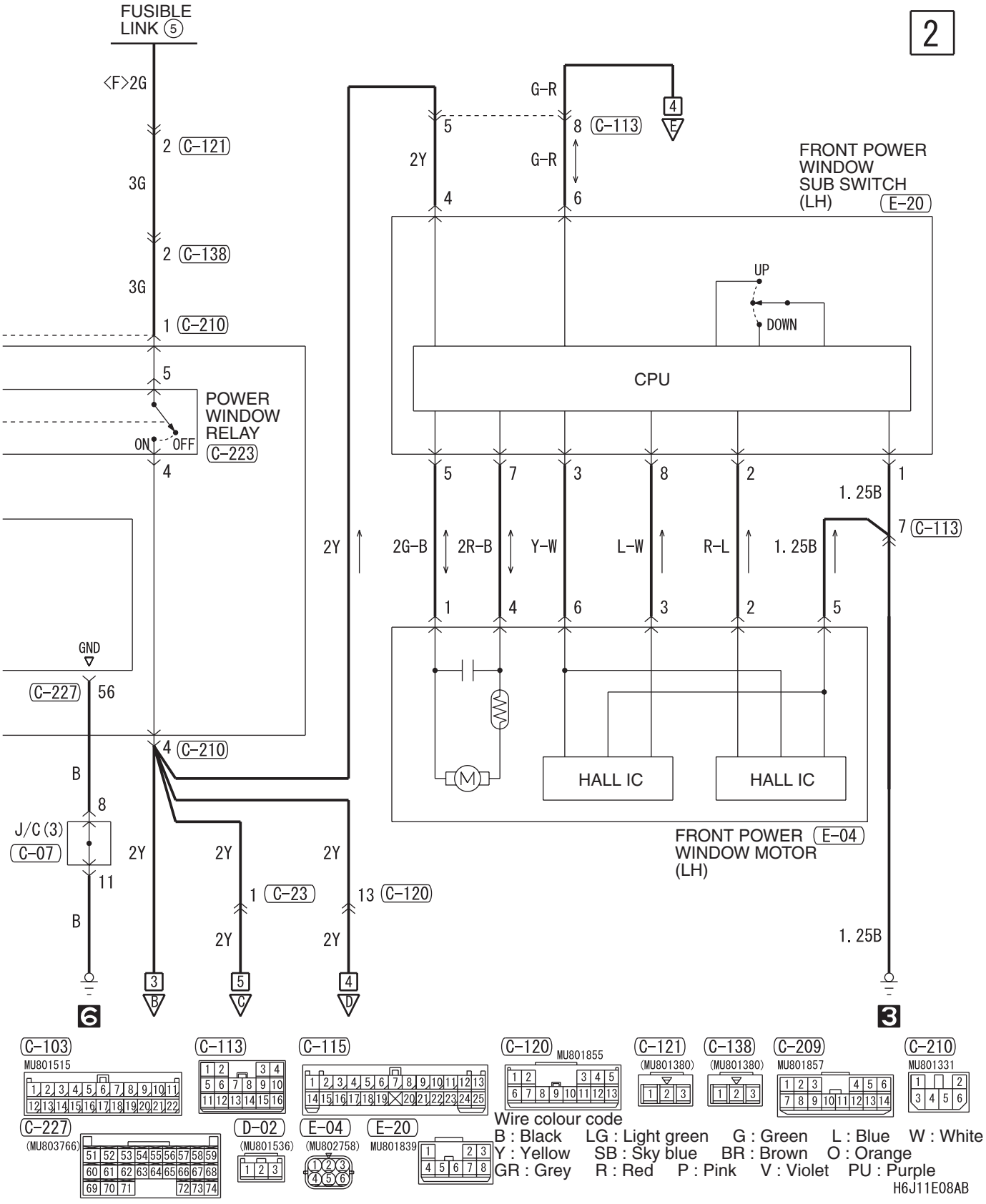
FUSIBLE LINK (5)
<F>2G
2 (C-121)
3G
2 (C-138)
3G
1 (C-210)
5
POWER WINDOW RELAY (C-223)
ON
OFF
4
GND
(C-227) 56
4 (C-210)
B
8
J/C (3)
(C-07)
11
B
2Y
2Y
2Y
1 (C-23)
13 (C-120)
2Y
2Y
3
B
5
C
4
D
6
2
G-R
4
E
5
8 (C-113)
2Y
G-R
4
6
FRONT POWER WINDOW SUB SWITCH (LH) (E-20)
UP
DOWN
CPU
5
7
3
8
2
1
1. 25B
7 (C-113)
2Y
2G-B
2R-B
Y-W
L-W
R-L
1. 25B
1
4
6
3
2
5
HALL IC
HALL IC
FRONT POWER WINDOW MOTOR (LH) (E-04)
1. 25B
3
(C-103)
MU801515
(C-113)
(C-115)
(C-120)
MU801855
(C-121)
(MU801380)
(C-138)
(MU801380)
(C-209)
MU801857
(C-210)
MU801331
(C-227)
(MU803766)
(D-02)
(MU801536)
(E-04)
(MU802758)
(E-20)
MU801839
Wire colour code
B : Black LG : Light green G : Green L : Blue W : White
Y : Yellow SB : Sky blue BR : Brown O : Orange
GR : Grey R : Red P : Pink V : Violet PU : Purple
H6J11E08AB

POWER WINDOWS <RHD> (CONTINUED)

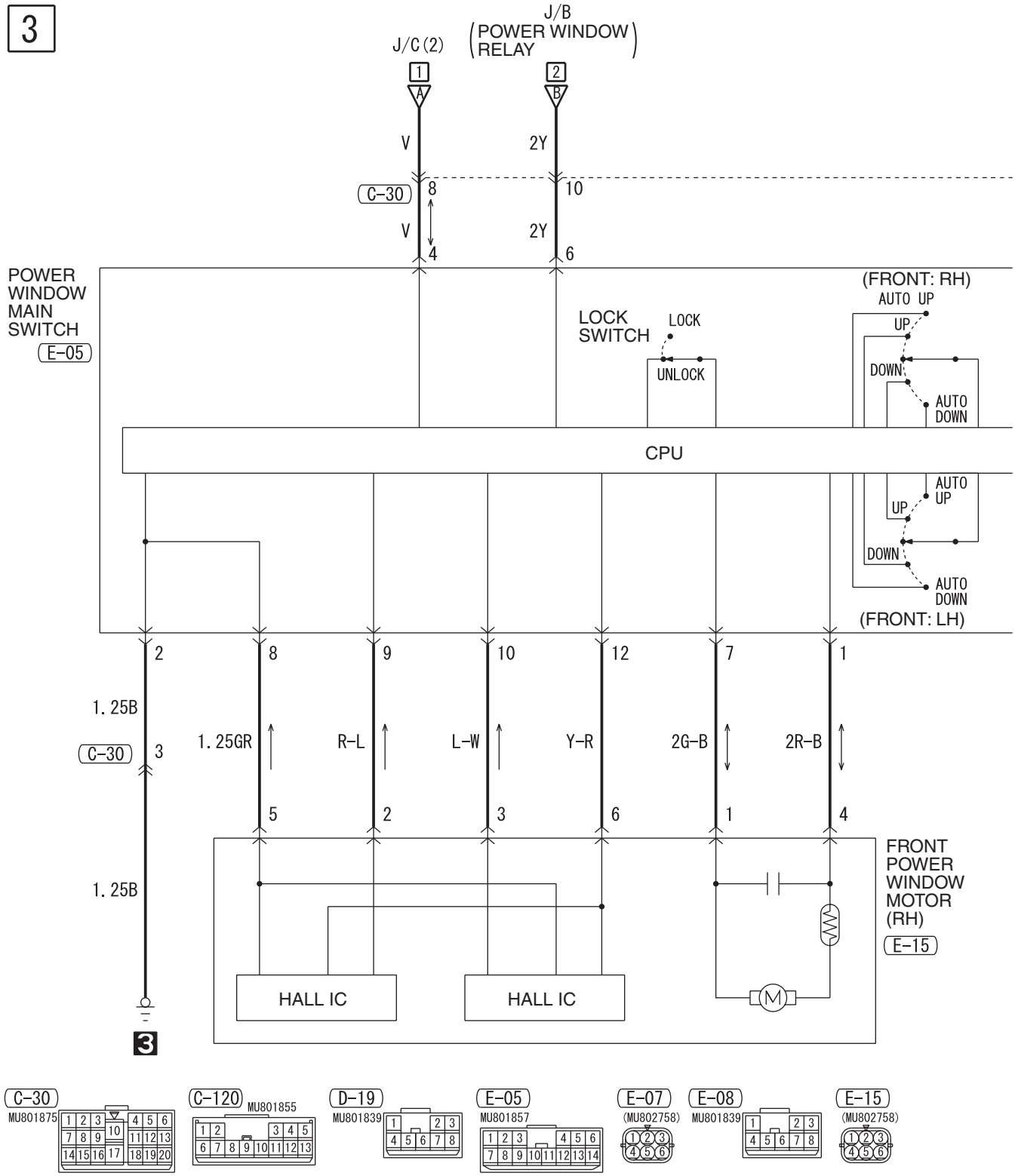

H6J11E08BA

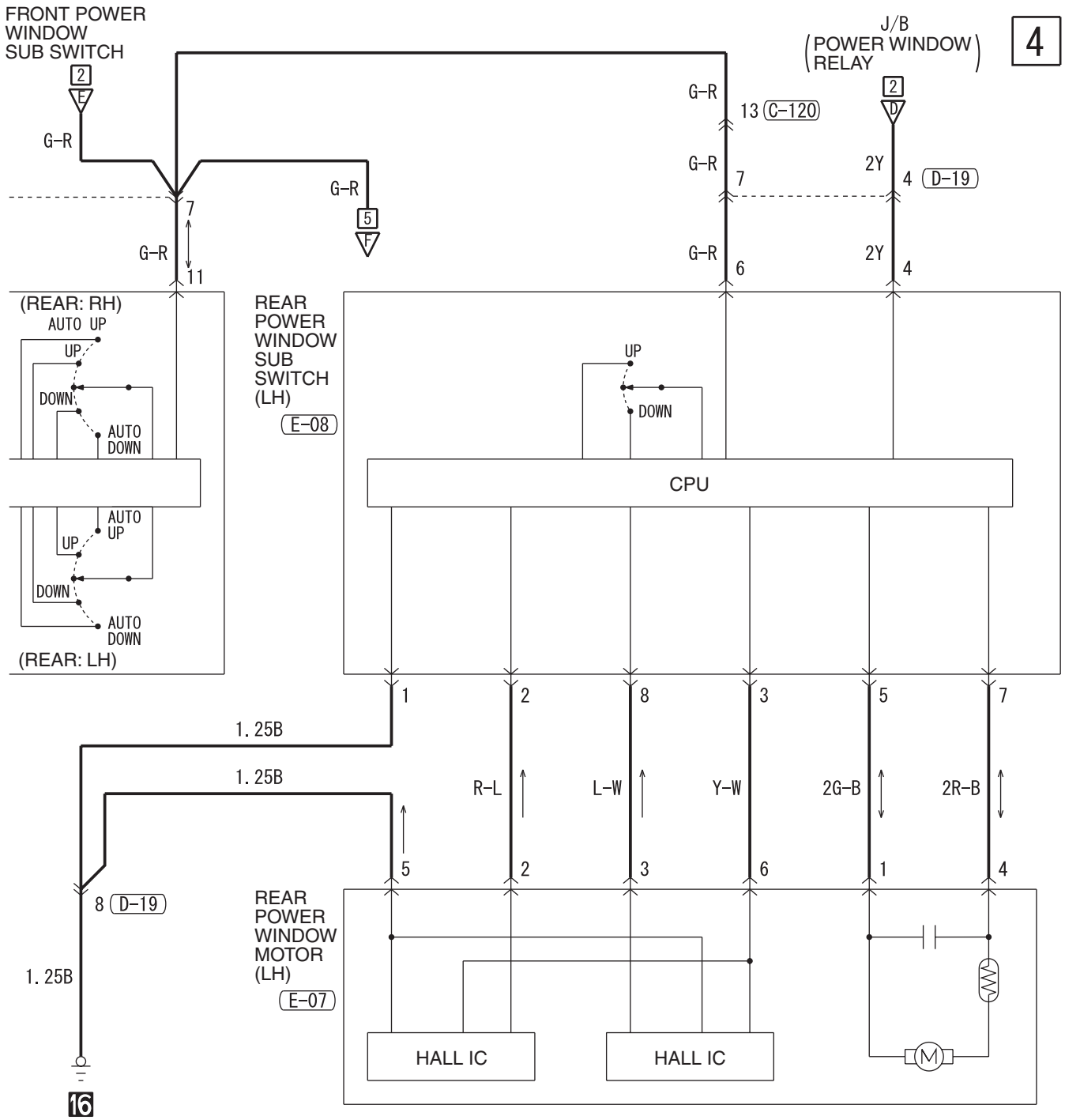

Wire colour code
B : Black LG : Light green G : Green L : Blue W : White Y : Yellow SB : Sky blue
BR : Brown O : Orange GR : Grey R : Red P : Pink V : Violet PU : Purple

H6J11E08BB

POWER WINDOWS <RHD> (CONTINUED)

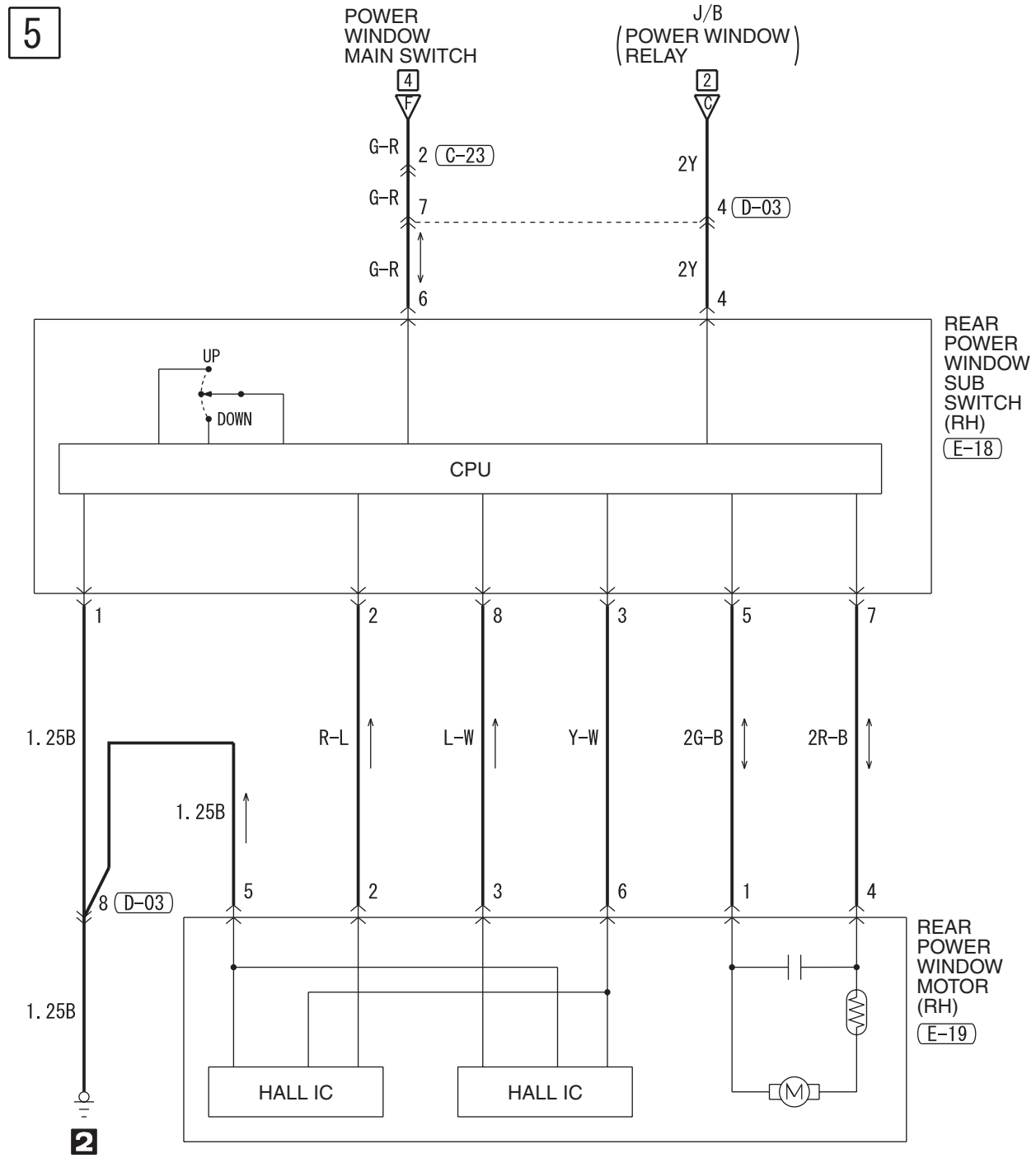

Wire colour code
B : Black LG : Light green G : Green L : Blue W : White Y : Yellow SB : Sky blue
BR : Brown O : Orange GR : Grey R : Red P : Pink V : Violet PU : Purple

H6J11E08CA

NOTES

CENTRAL DOOR LOCKING SYSTEM

CENTRAL DOOR LOCKING SYSTEM <LHD WITHOUT KEYLESS ENTRY>

M1901004703310

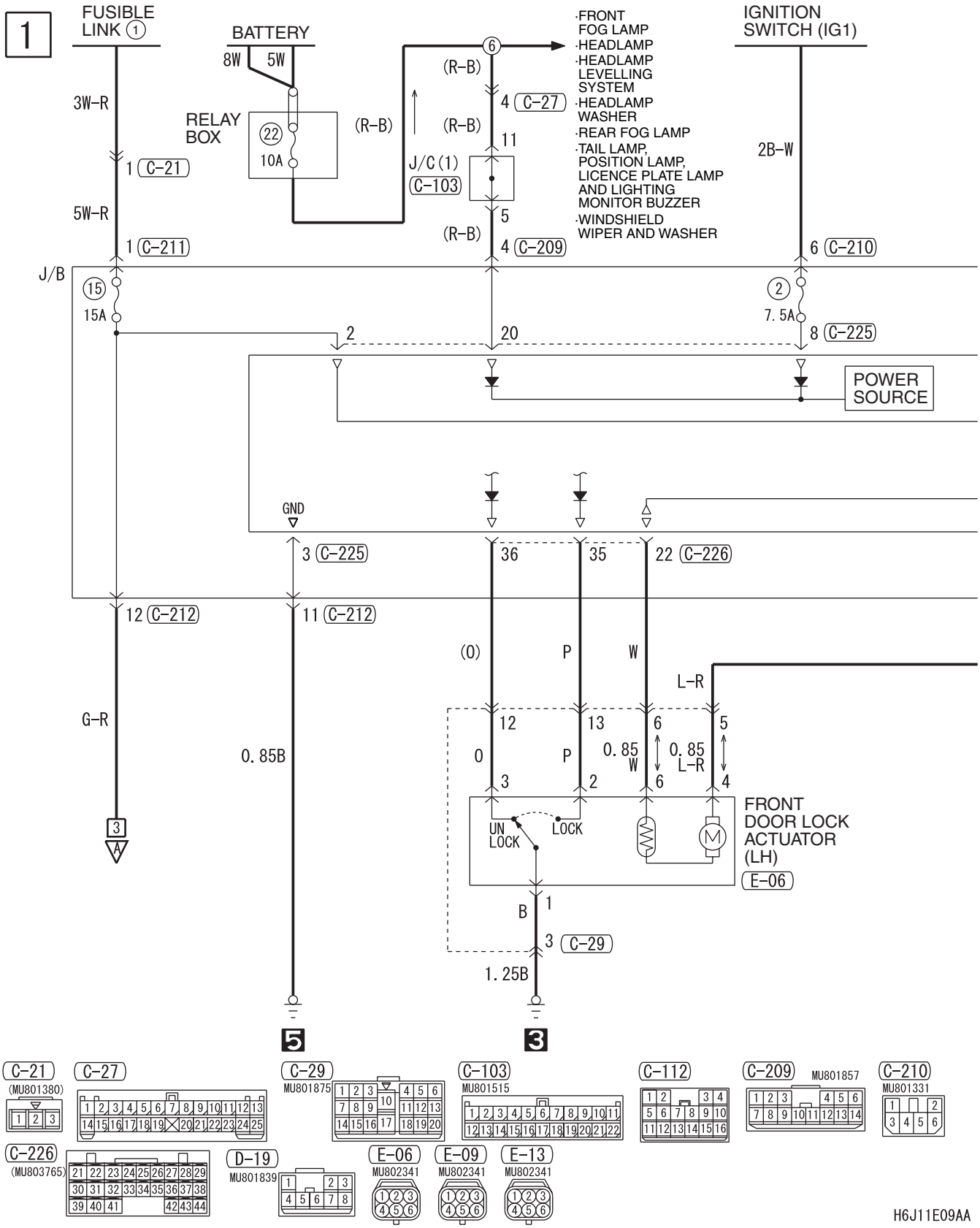

2

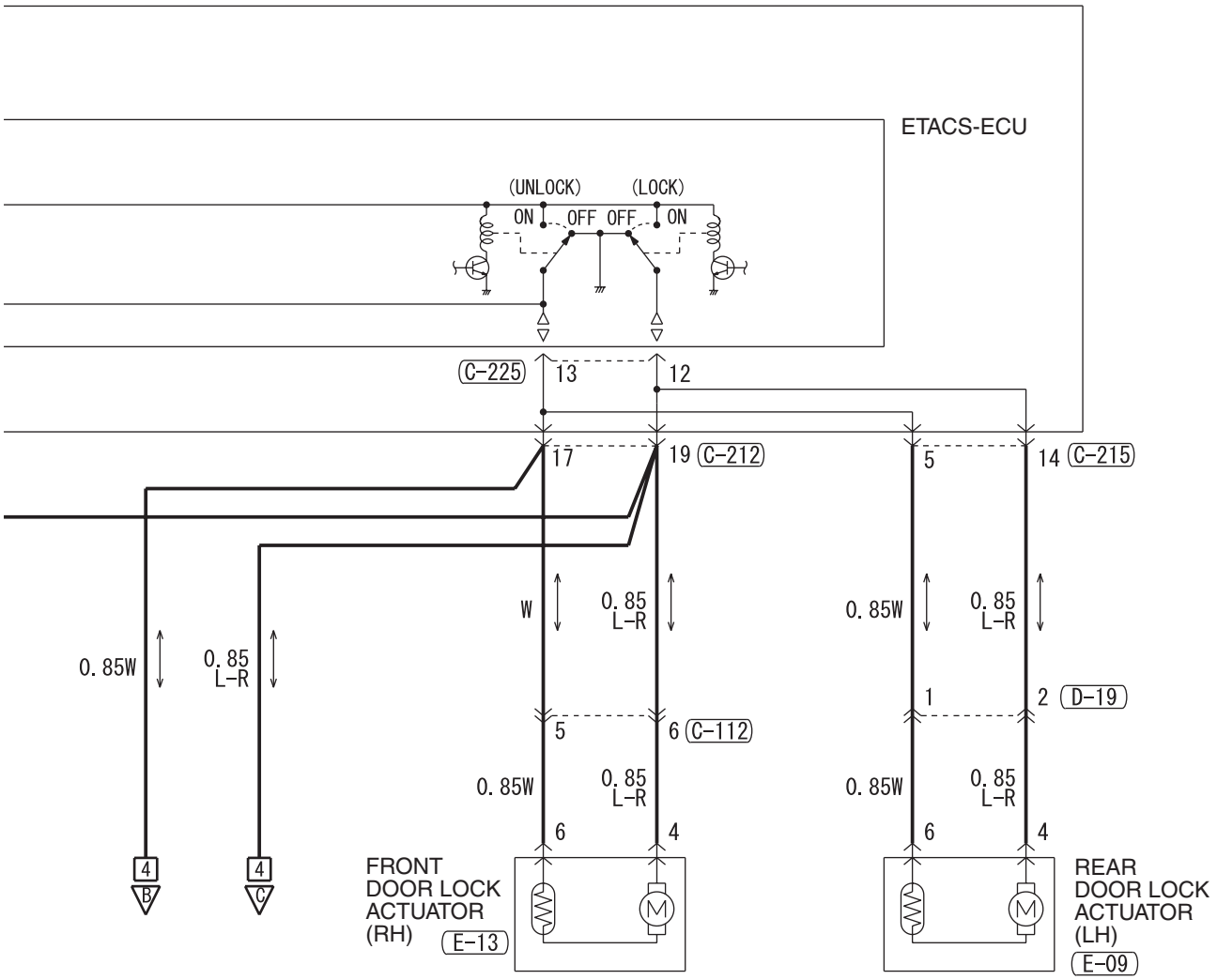

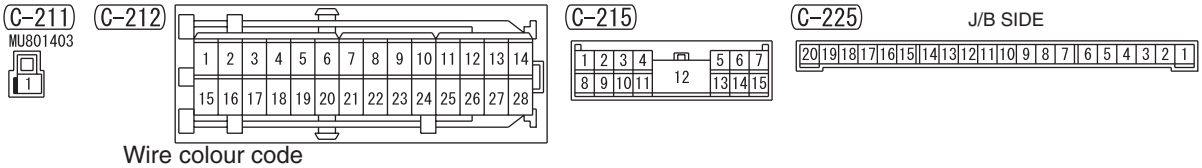

Wire colour code
B : Black LG : Light green G : Green L : Blue W : White Y : Yellow SB : Sky blue
BR : Brown O : Orange GR : Grey R : Red P : Pink V : Violet PU : Purple

H6J11E09AB

CENTRAL DOOR LOCKING SYSTEM <LHD WITHOUT KEYLESS ENTRY> (CONTINUED)

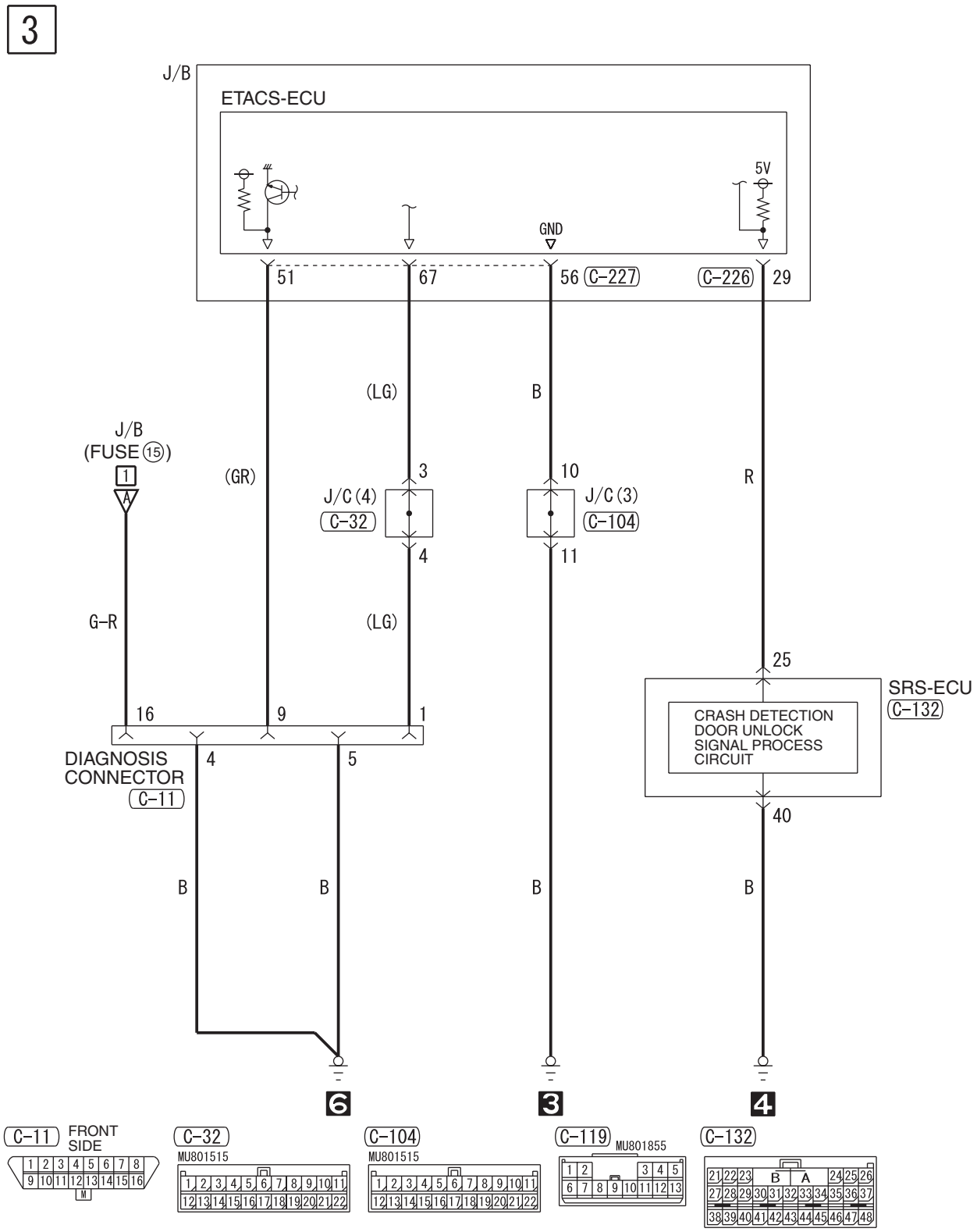

H6J11E09BA

4

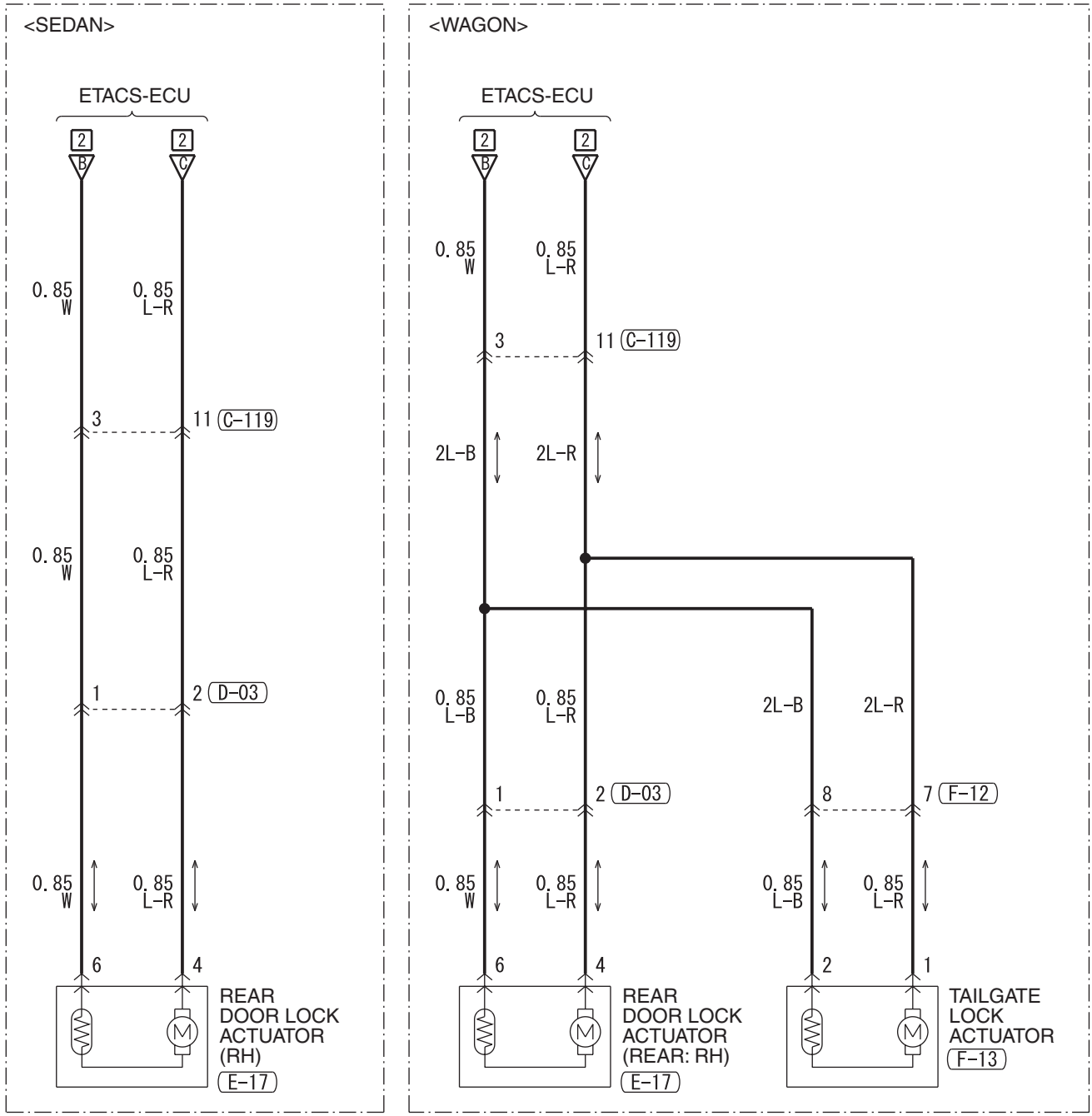

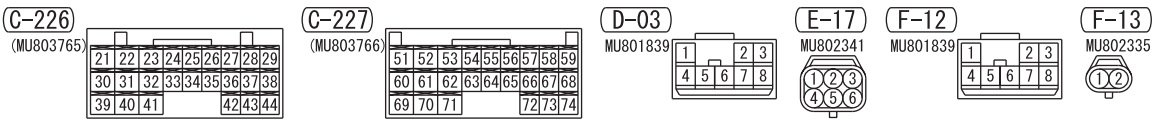

Wire colour code
B : Black LG : Light green G : Green L : Blue W : White Y : Yellow SB : Sky blue
BR : Brown O : Orange GR : Grey R : Red P : Pink V : Violet PU : Purple

H6J11E09BB

CENTRAL DOOR LOCKING SYSTEM <RHD WITHOUT KEYLESS ENTRY>

M1901004703321

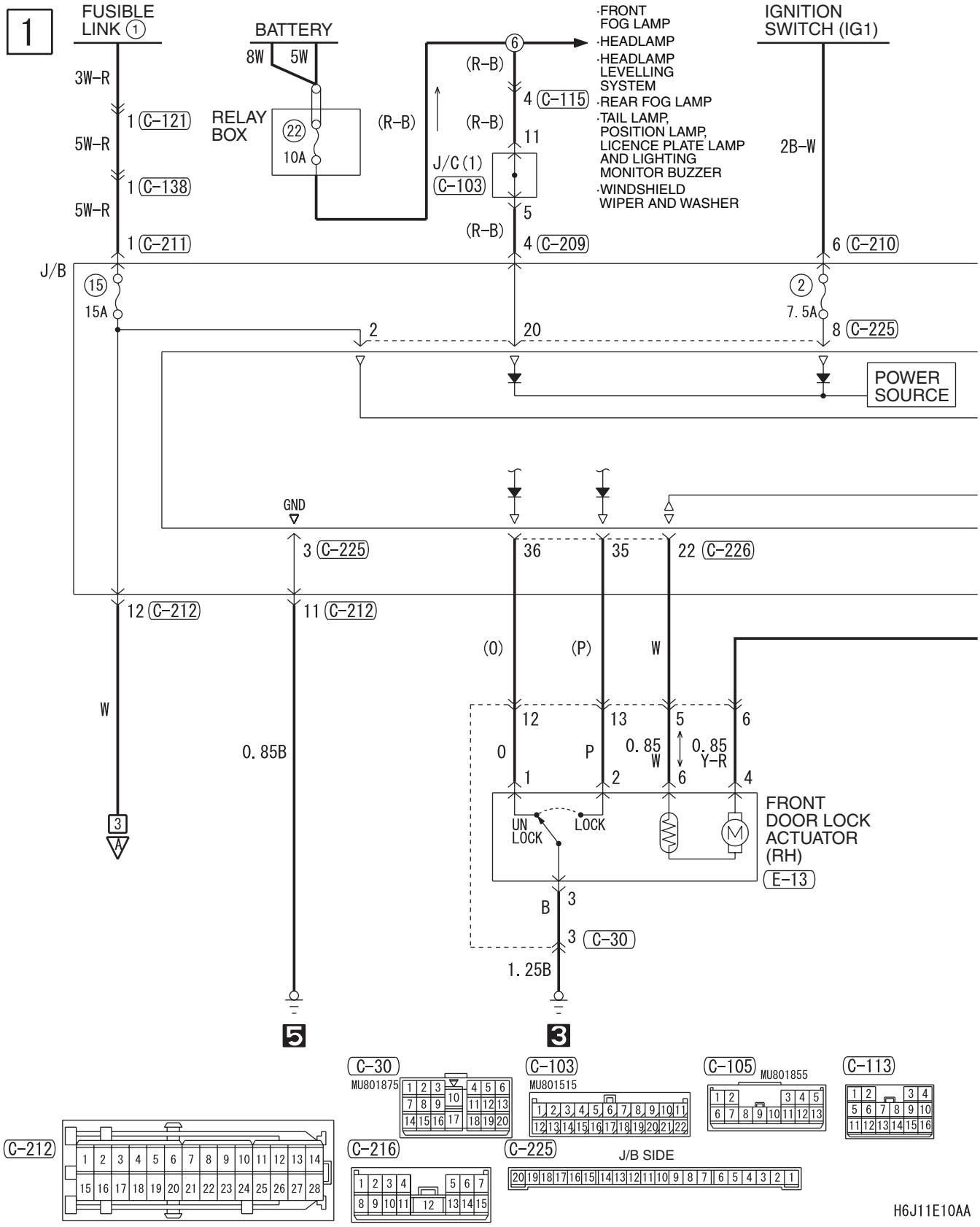

2

NOTE
*1 : SEDAN
*2 : WAGON

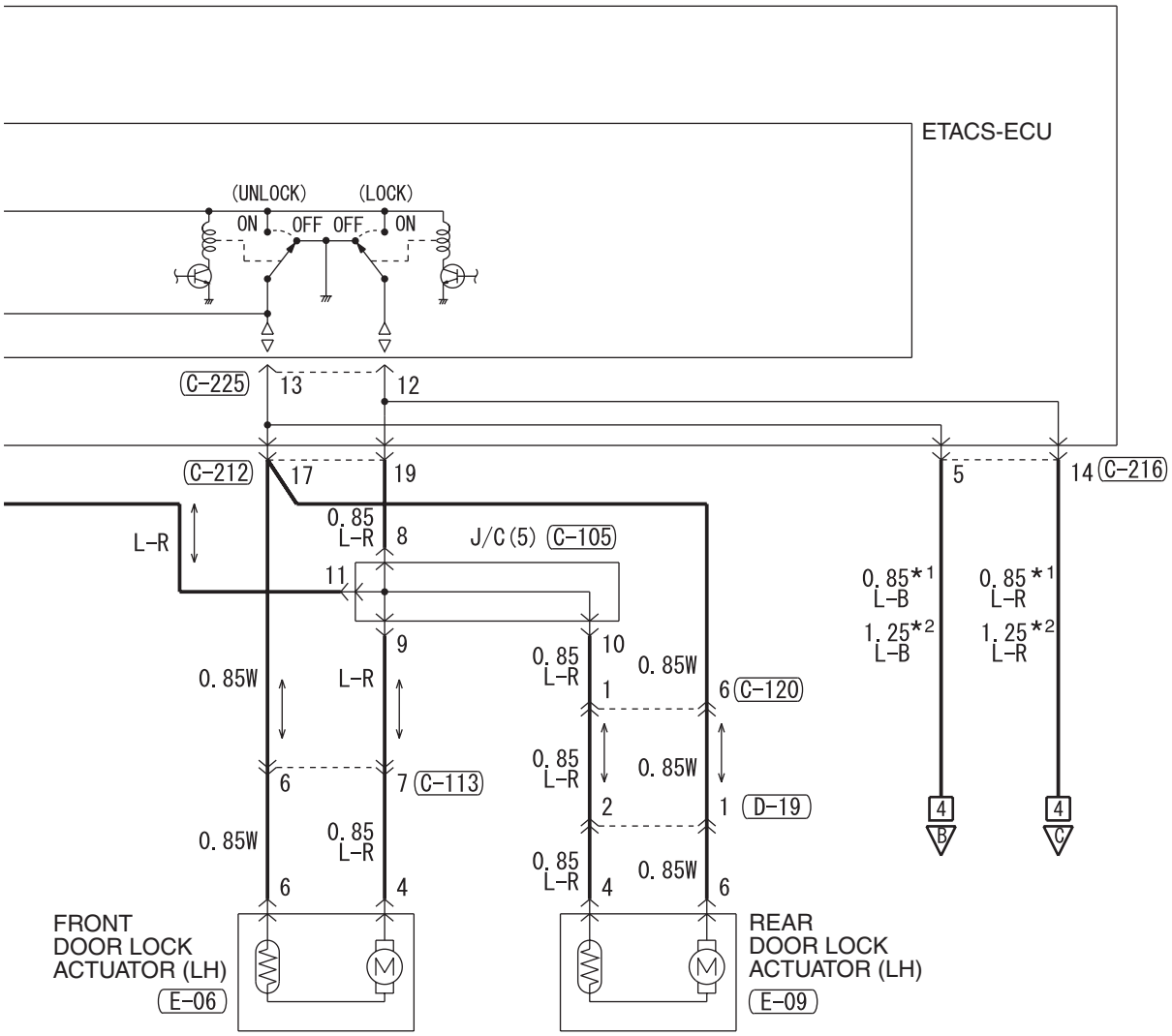

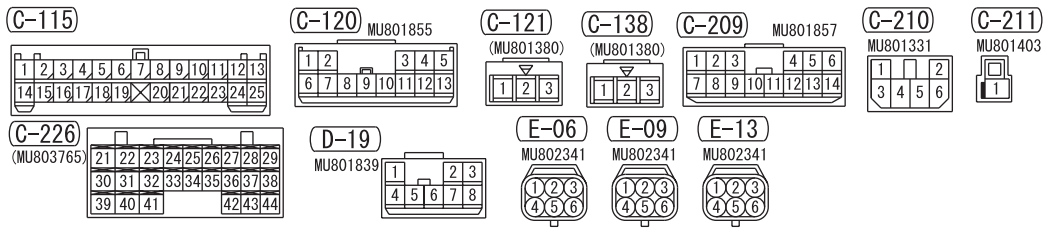

H6J11E10AB

CENTRAL DOOR LOCKING SYSTEM <RHD WITHOUT KEYLESS ENTRY> (CONTINUED)

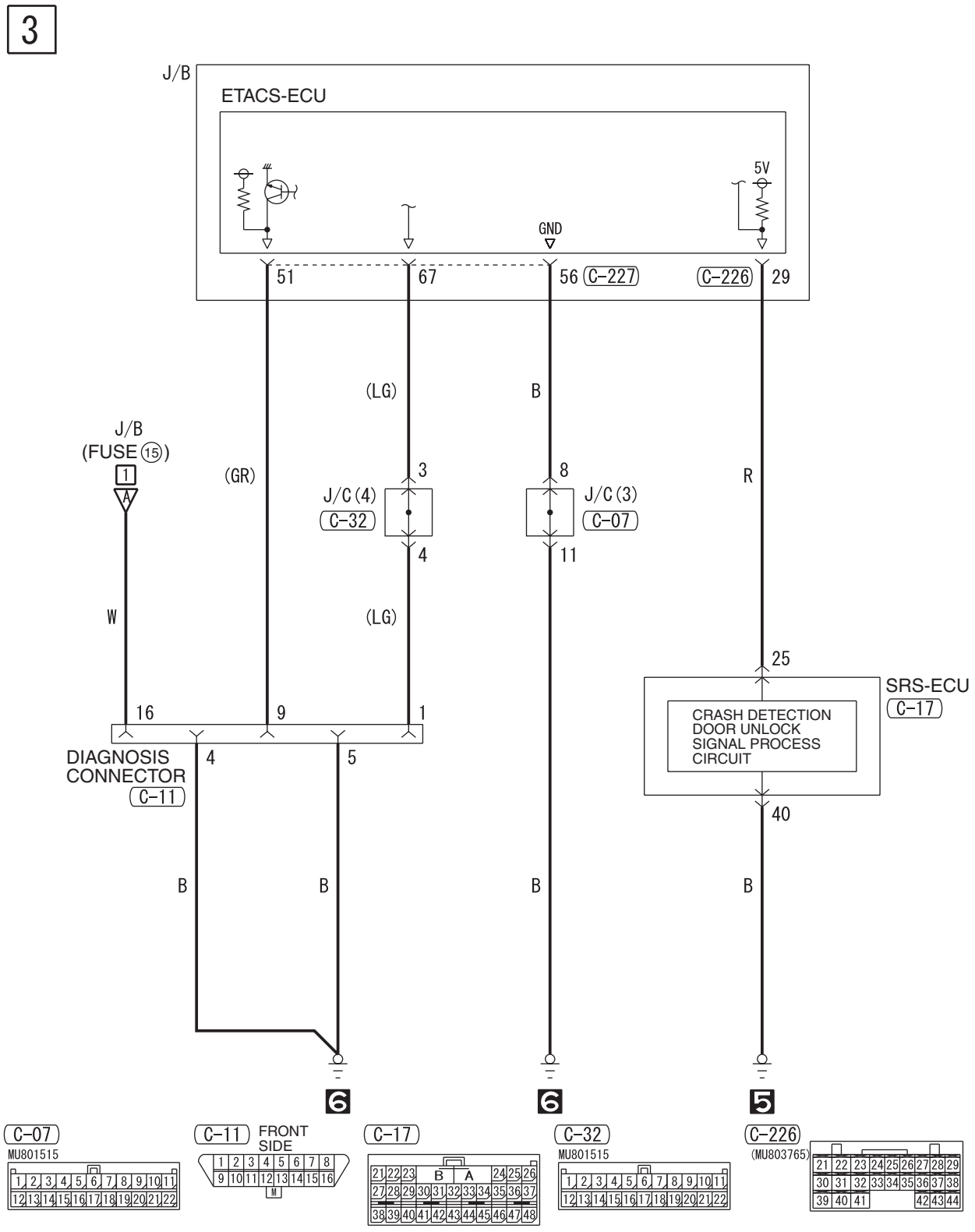

H6J11E10BA

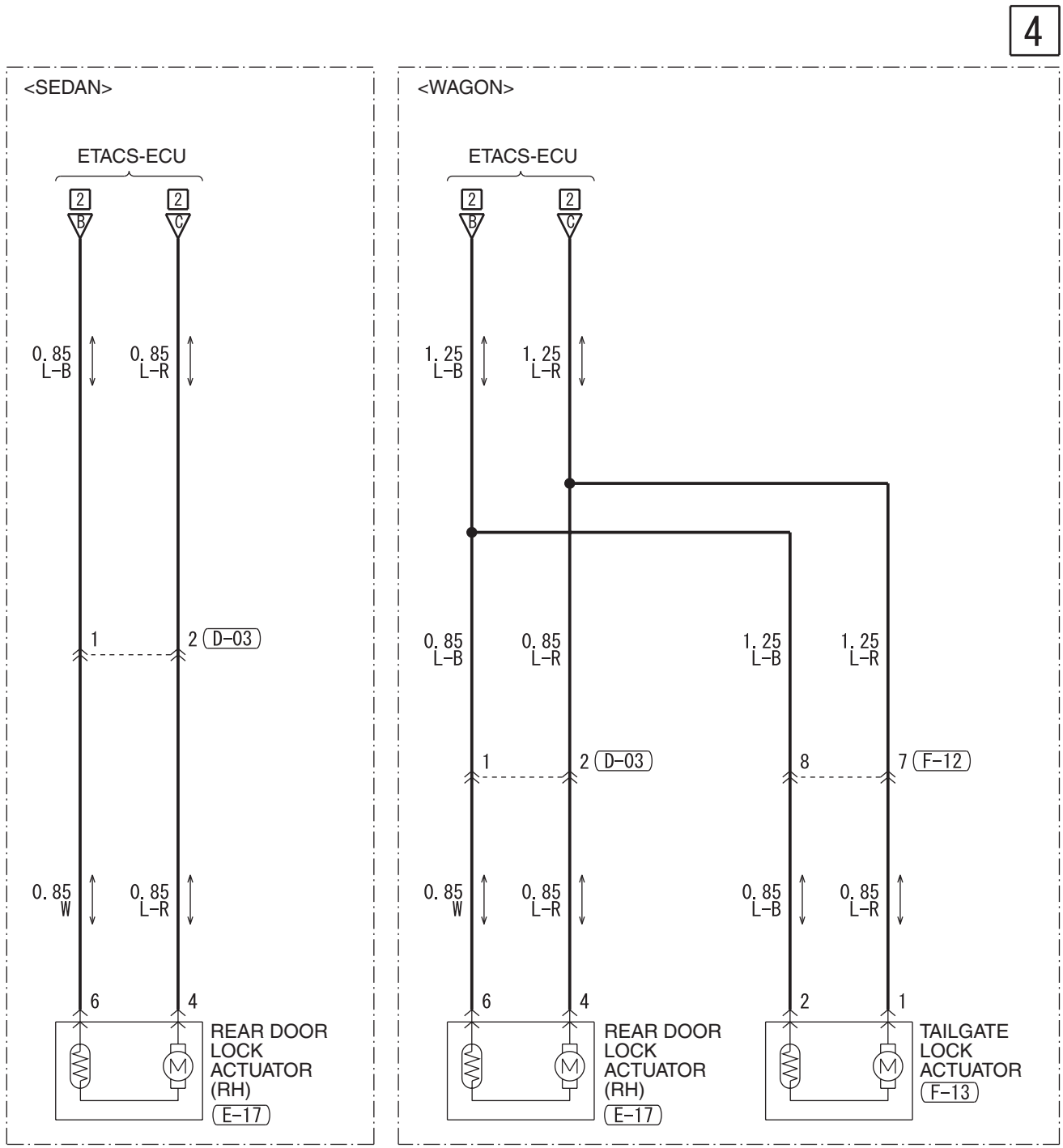

Wire colour code
B : Black LG : Light green G : Green L : Blue W : White Y : Yellow SB : Sky blue
BR : Brown O : Orange GR : Grey R : Red P : Pink V : Violet PU : Purple

H6J11E10BB

CENTRAL DOOR LOCKING SYSTEM <SEDAN LHD WITH KEYLESS ENTRY>

M1901004703332

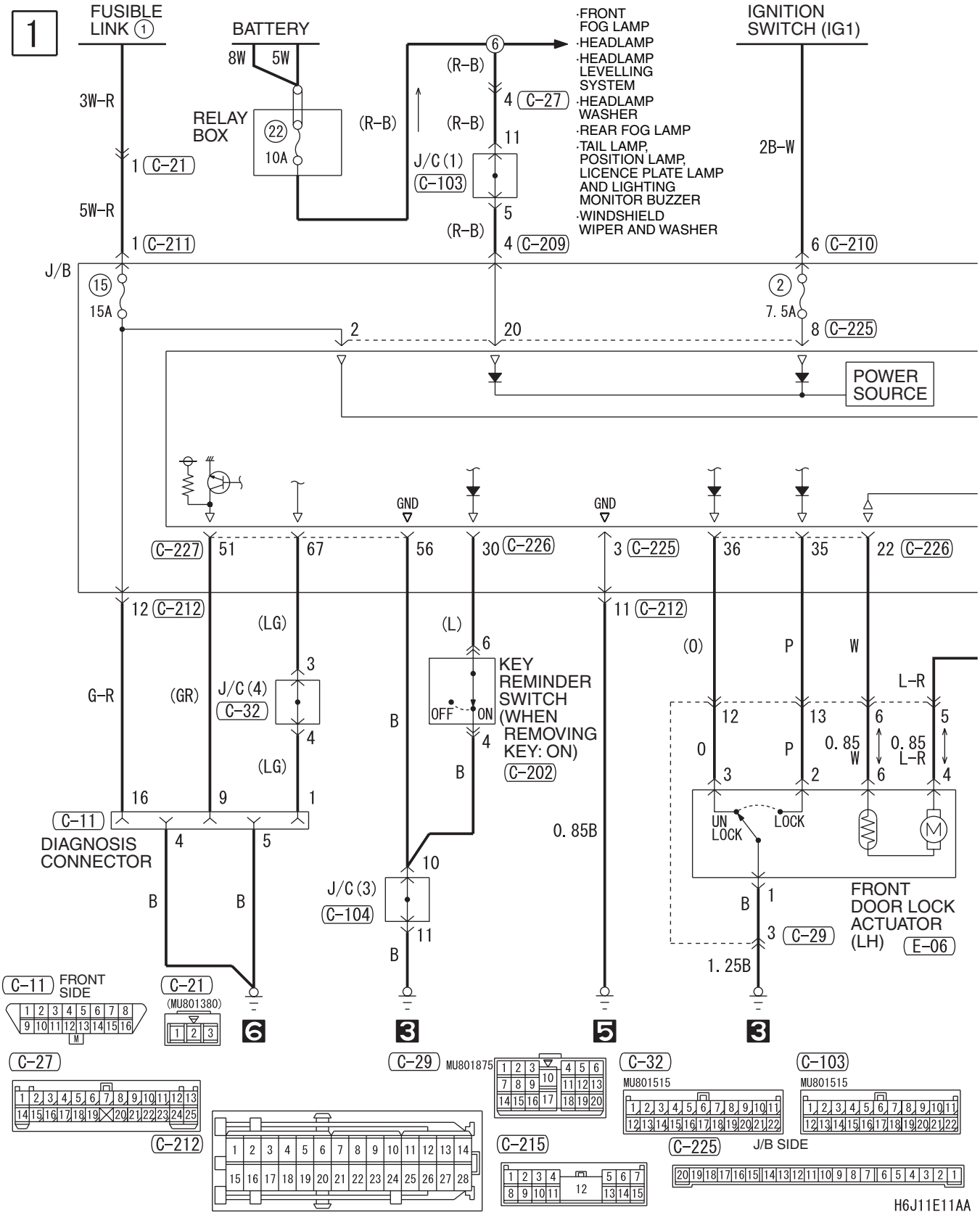

2

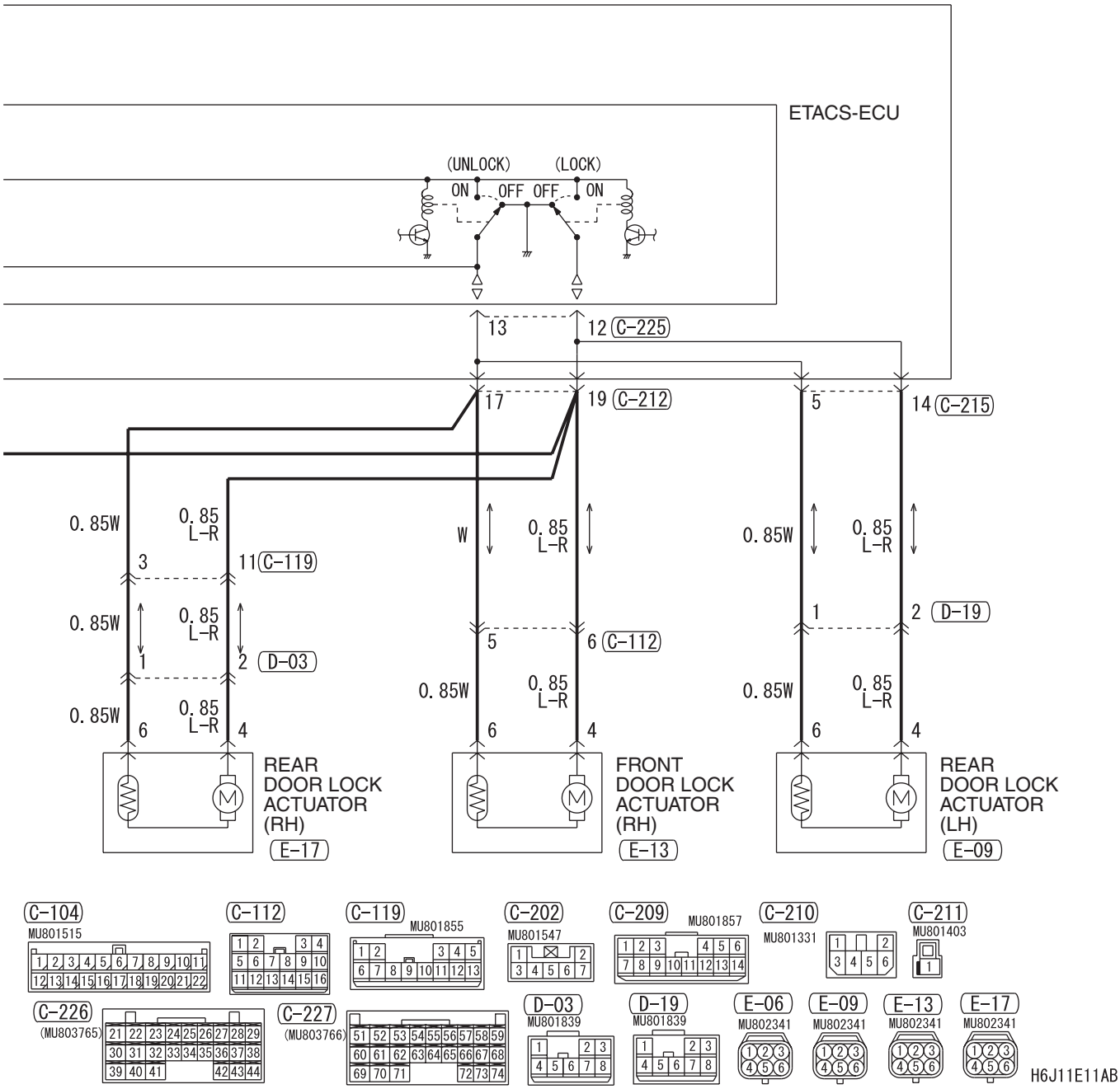
ETACS-ECU
(UNLOCK)
(LOCK)
ON
OFF
OFF
ON
13
12 C-225
17
19 C-212
5
14 C-215
0.85W
0.85 L-R
W
0.85W
0.85 L-R
3
11 C-119
1
2 D-03
5
6 C-112
1
2 D-19
6
4
REAR DOOR LOCK ACTUATOR (RH)
E-17
FRONT DOOR LOCK ACTUATOR (RH)
E-13
REAR DOOR LOCK ACTUATOR (LH)
E-09
C-104
MU801515
C-112
C-119
MU801855
C-202
MU801547
C-209
MU801857
C-210
MU801331
C-211
MU801403
C-226
(MU803765)
C-227
(MU803766)
D-03
MU801839
D-19
MU801839
E-06
MU802341
E-09
MU802341
E-13
MU802341
E-17
MU802341
H6J11E11AB

CENTRAL DOOR LOCKING SYSTEM <SEDAN LHD WITH KEYLESS ENTRY> (CONTINUED)

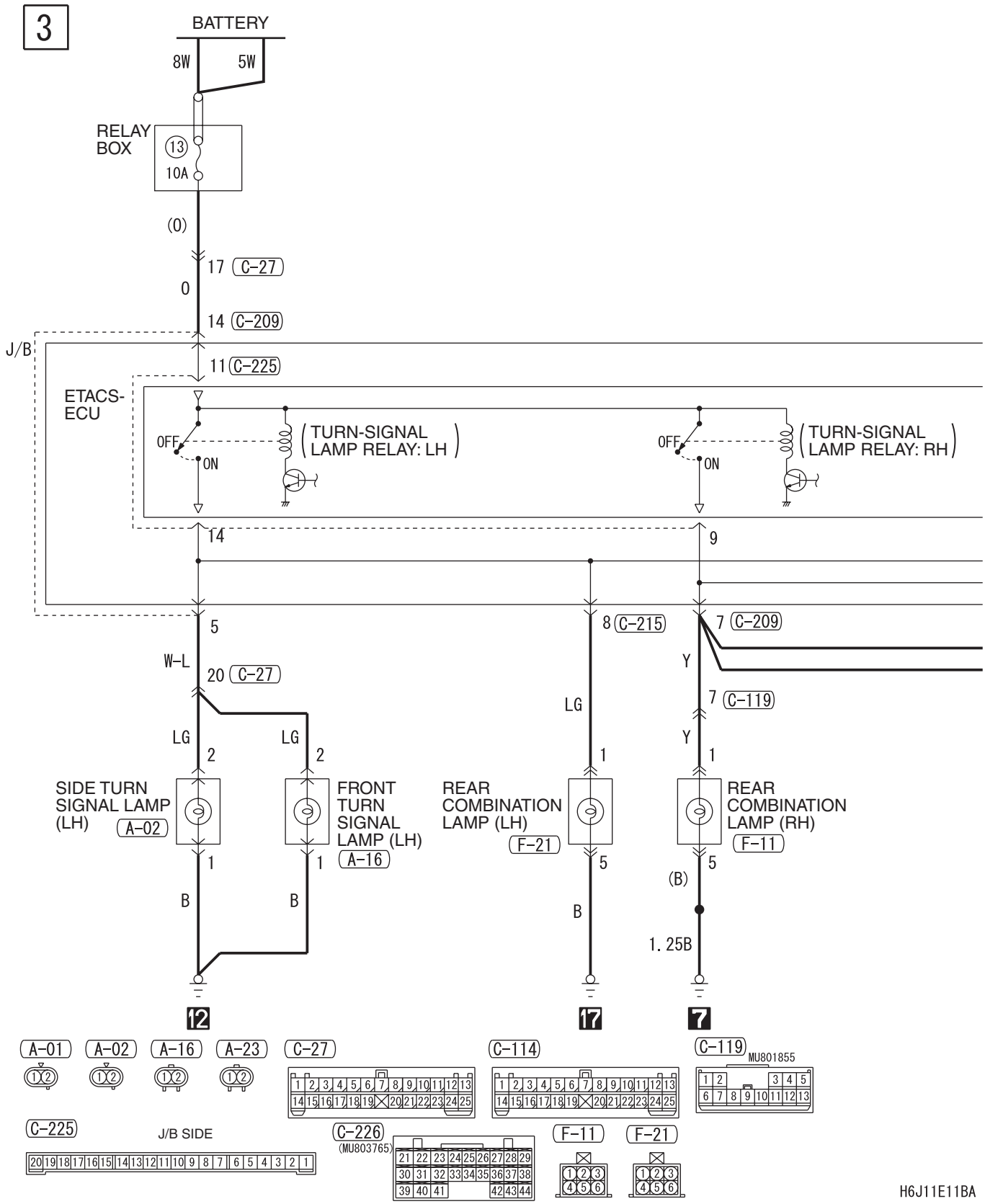

4

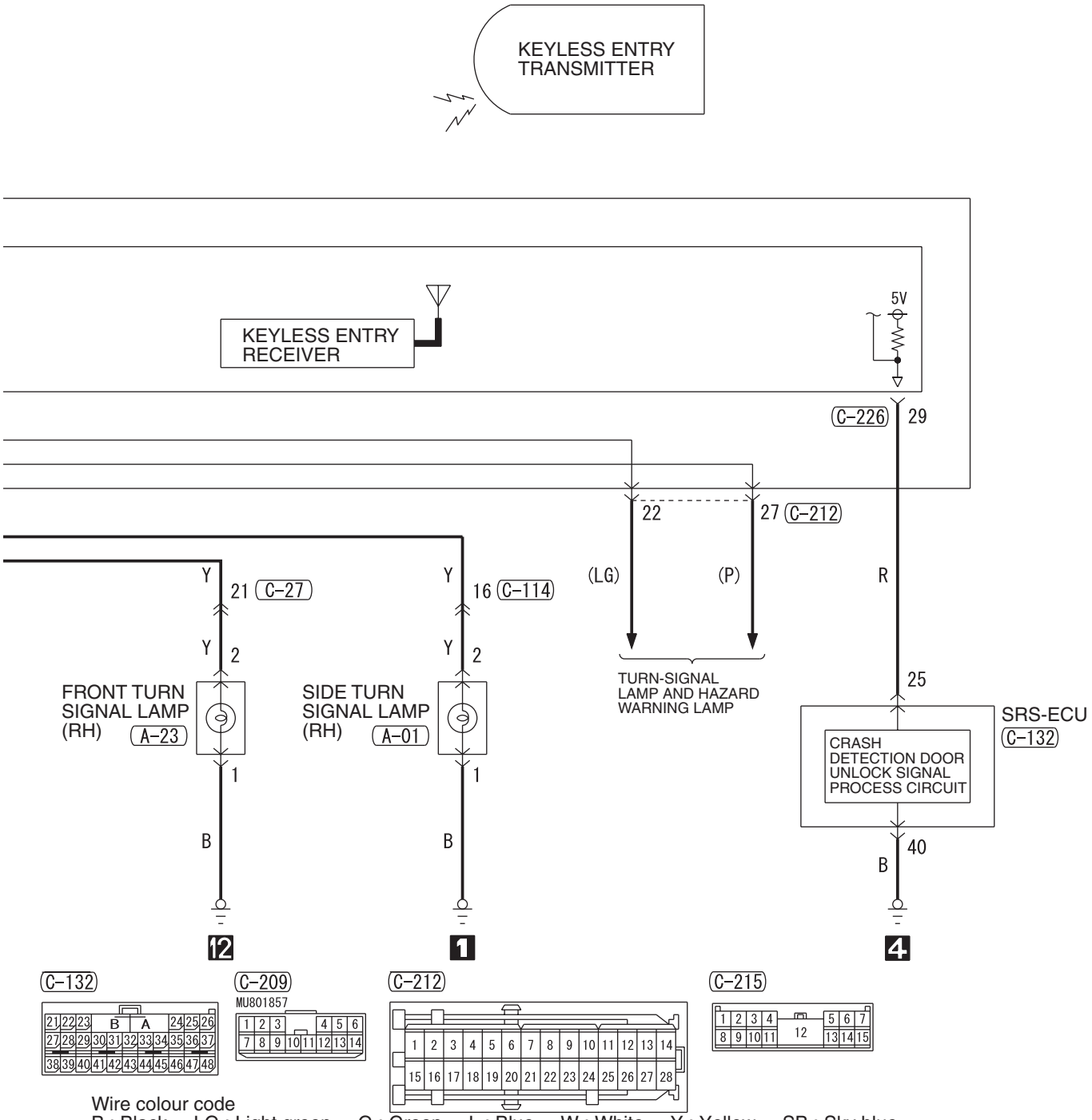

Wire colour code
B : Black LG : Light green G : Green L : Blue W : White Y : Yellow SB : Sky blue
BR : Brown O : Orange GR : Grey R : Red P : Pink V : Violet PU : Purple

H6J11E11BB

CENTRAL DOOR LOCKING SYSTEM <SEDAN LHD WITH KEYLESS ENTRY> (CONTINUED)

5

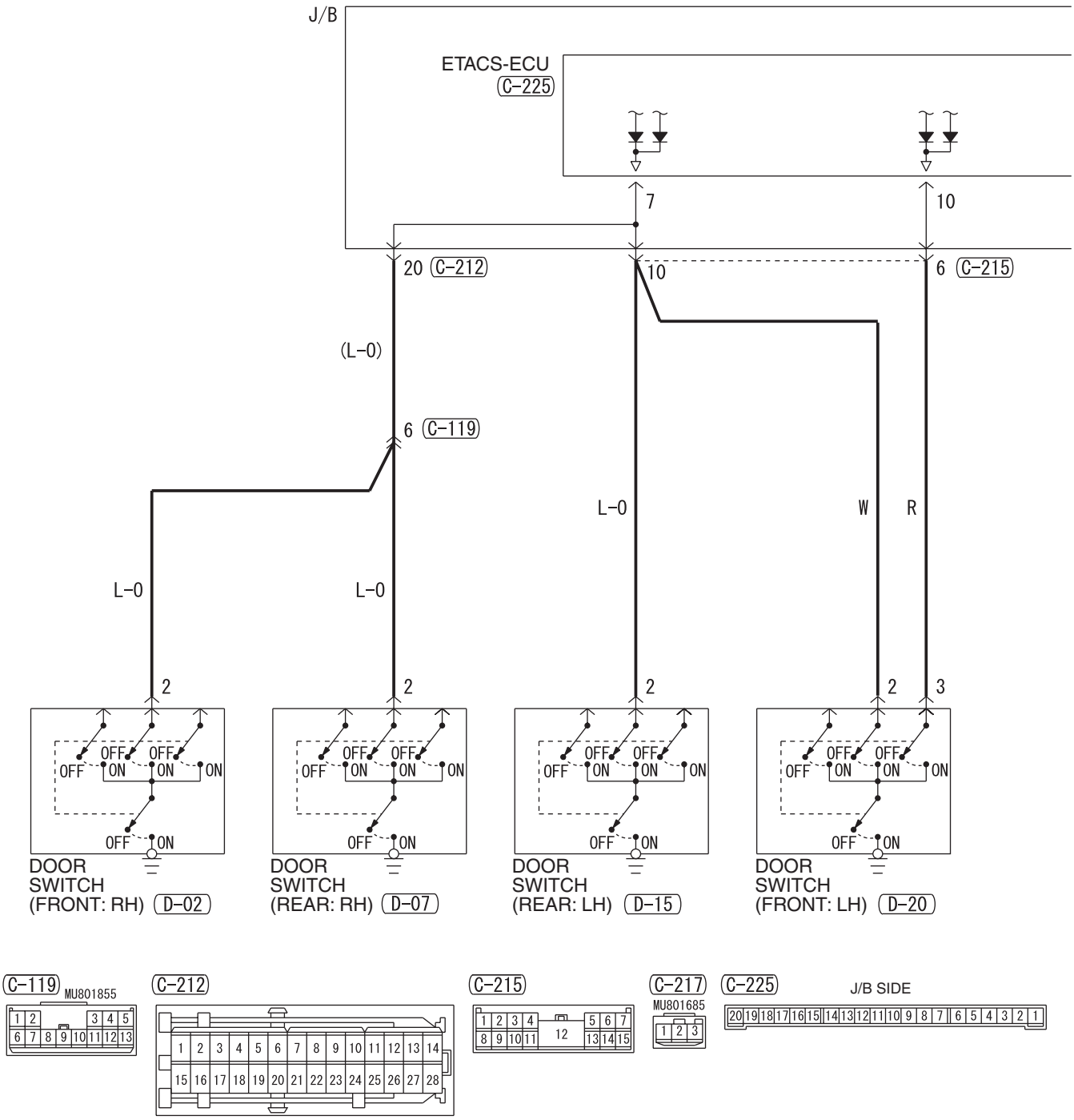

6

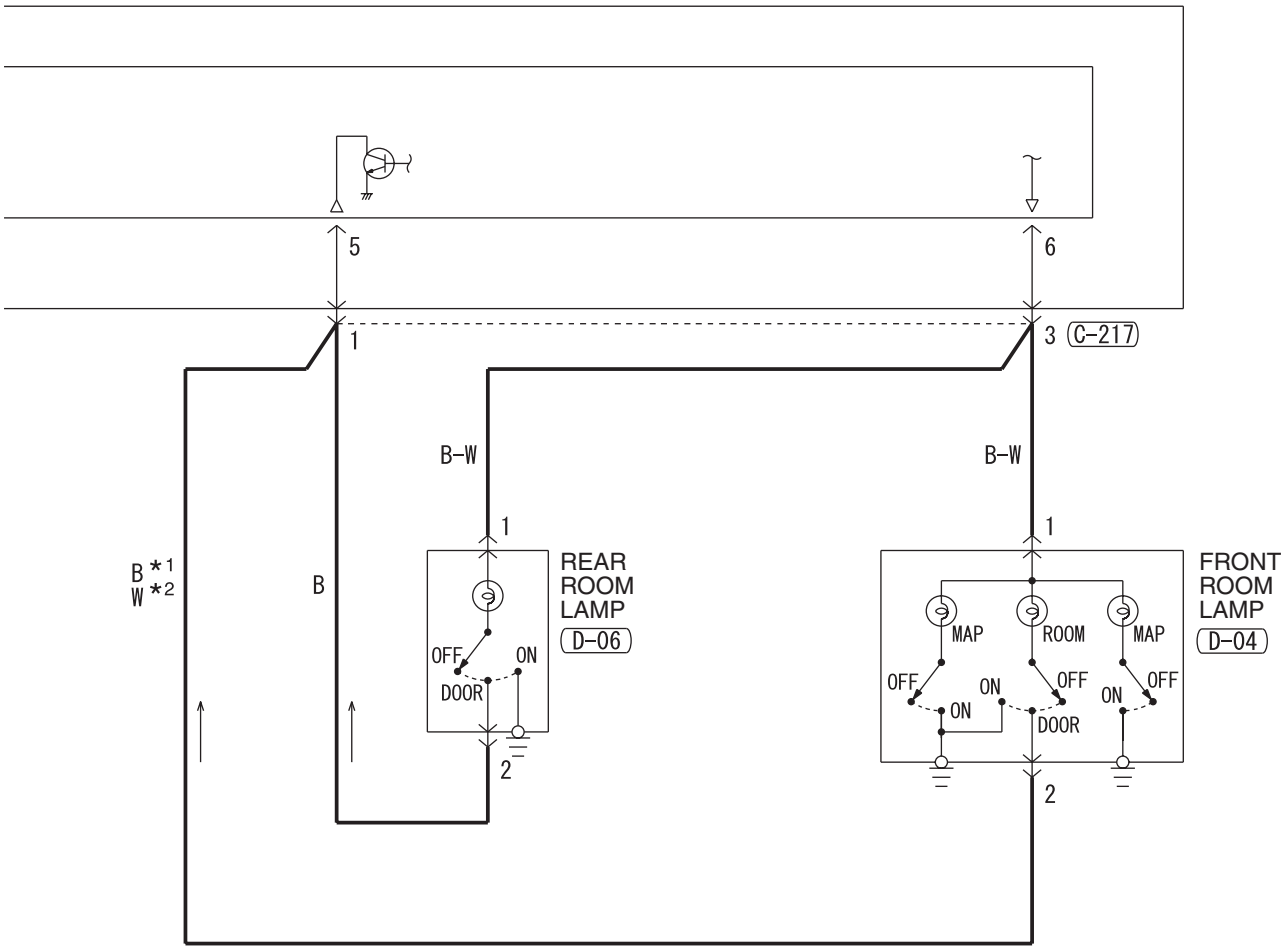

NOTE
*1: VEHICLES WITHOUT CARTAIN AIR BAG
*2: VEHICLES WITH CARTAIN AIR BAG

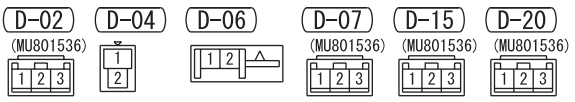

Wire colour code
B : Black LG : Light green G : Green L : Blue W : White Y : Yellow SB : Sky blue
BR : Brown O : Orange GR : Grey R : Red P : Pink V : Violet PU : Purple

H6J11E11CB

CENTRAL DOOR LOCKING SYSTEM <SEDAN RHD WITH KEYLESS ENTRY>

M1901004703343

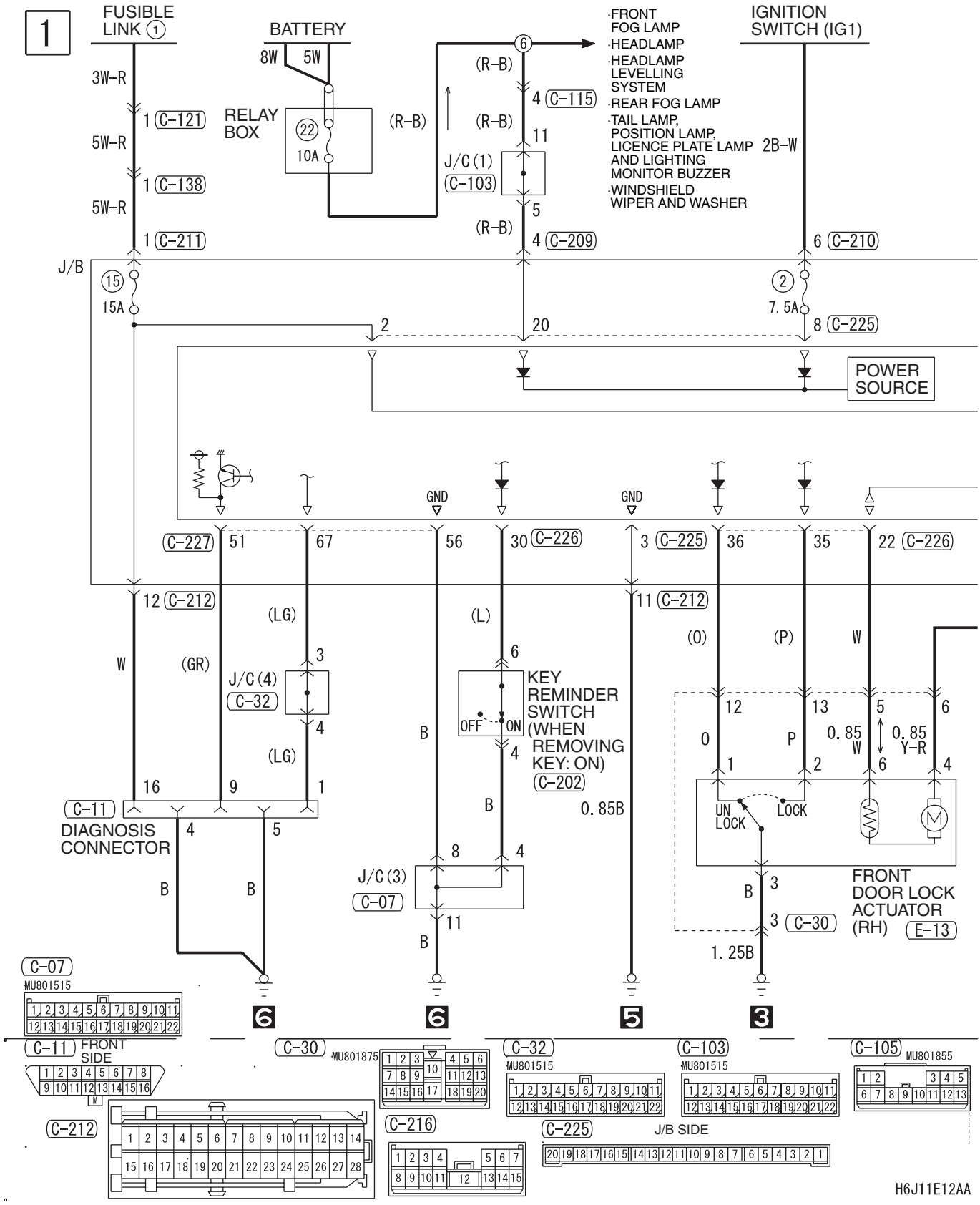

2

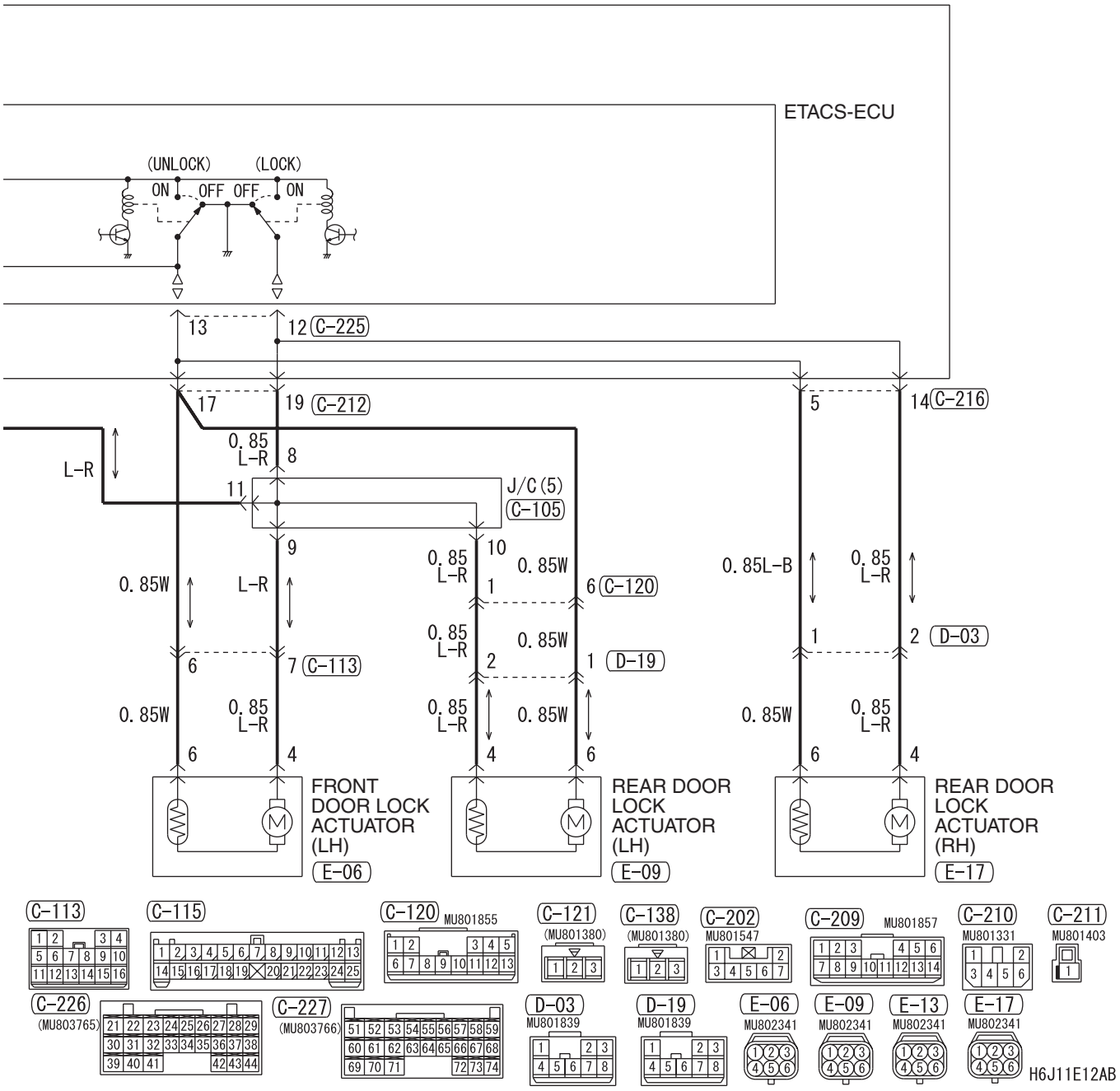
ETACS-ECU
(UNLOCK)
(LOCK)
ON
OFF
OFF
ON
13
12 C-225
17
19 C-212
5
14 C-216
0.85 L-R
8
L-R
11
J/C (5)
C-105
9
10
0.85W
L-R
0.85 L-R
0.85W
1
6 C-120
0.85 L-R
0.85W
2
1 D-19
6
7 C-113
0.85L-B
0.85 L-R
1
2 D-03
0.85W
0.85 L-R
0.85 L-R
0.85W
0.85W
0.85 L-R
6
4
4
6
6
4
FRONT DOOR LOCK ACTUATOR (LH)
E-06
REAR DOOR LOCK ACTUATOR (LH)
E-09
REAR DOOR LOCK ACTUATOR (RH)
E-17
C-113
C-115
C-120
MU801855
C-121
(MU801380)
C-138
(MU801380)
C-202
MU801547
C-209
MU801857
C-210
MU801331
C-211
MU801403
C-226
(MU803765)
C-227
(MU803766)
D-03
MU801839
D-19
MU801839
E-06
MU802341
E-09
MU802341
E-13
MU802341
E-17
MU802341
H6J11E12AB

CENTRAL DOOR LOCKING SYSTEM <SEDAN RHD WITH KEYLESS ENTRY> (CONTINUED)

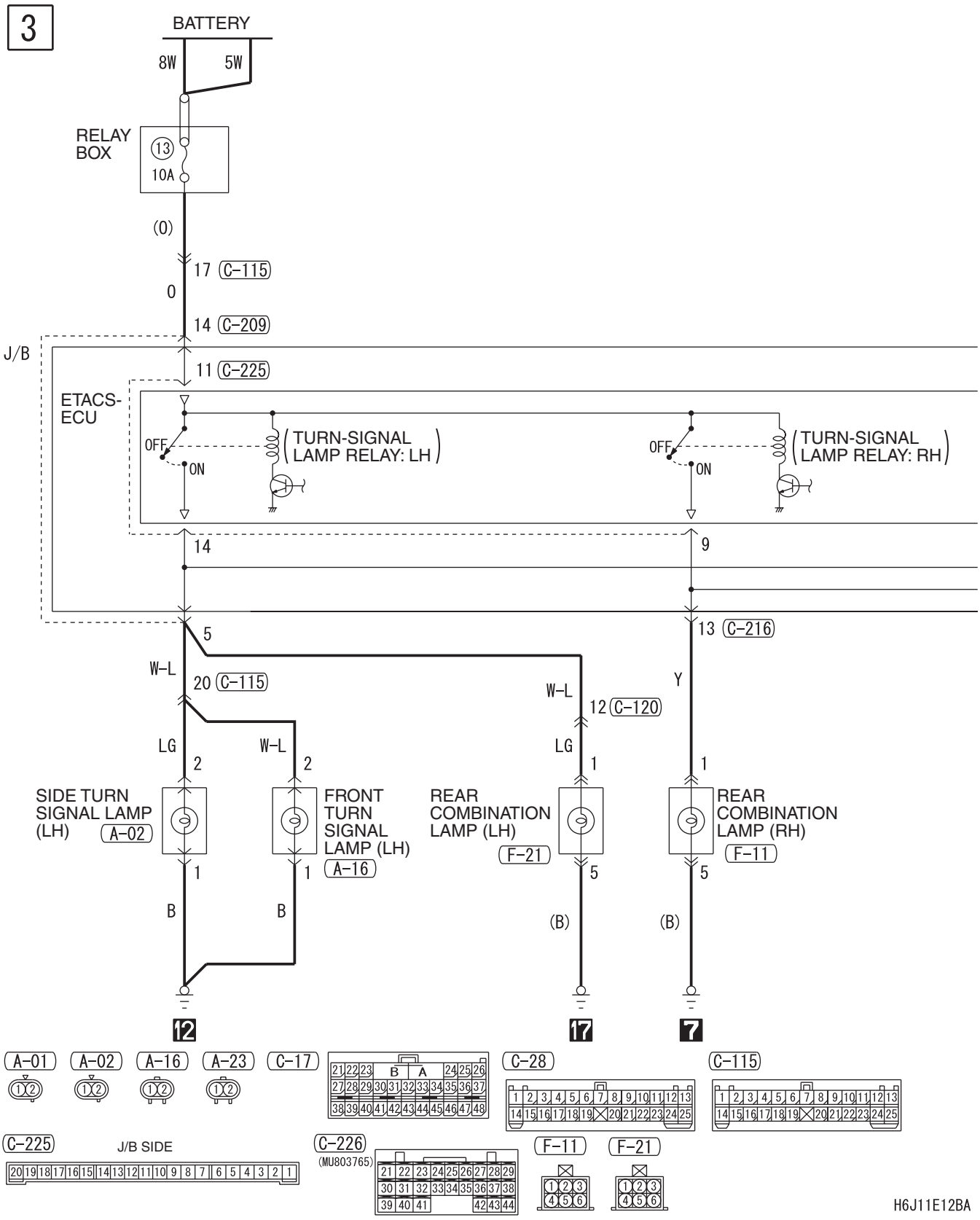

4

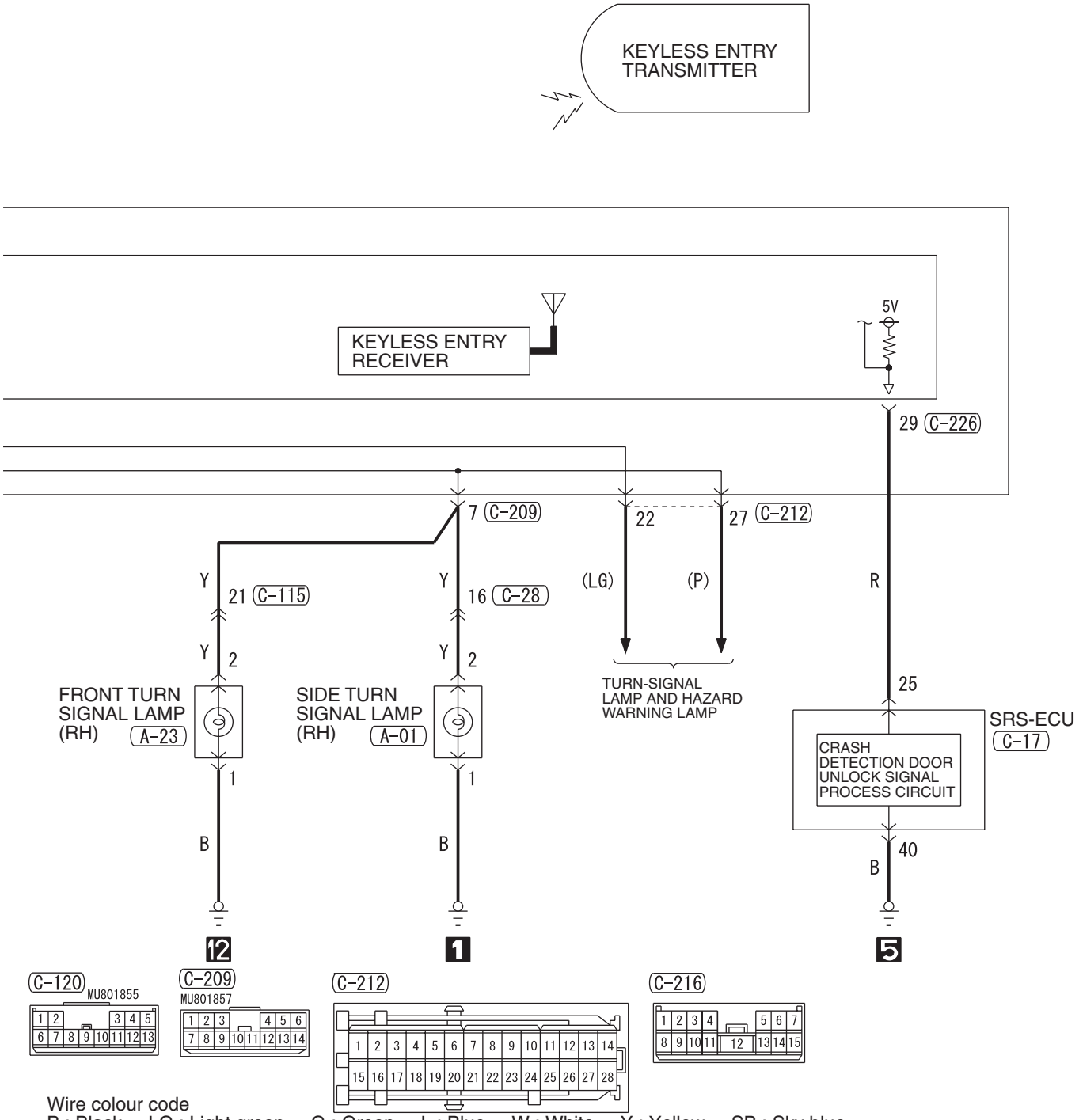

Wire colour code
B : Black LG : Light green G : Green L : Blue W : White Y : Yellow SB : Sky blue
BR : Brown O : Orange GR : Grey R : Red P : Pink V : Violet PU : Purple

H6J11E12BB

CENTRAL DOOR LOCKING SYSTEM <SEDAN RHD WITH KEYLESS ENTRY> (CONTINUED)

5

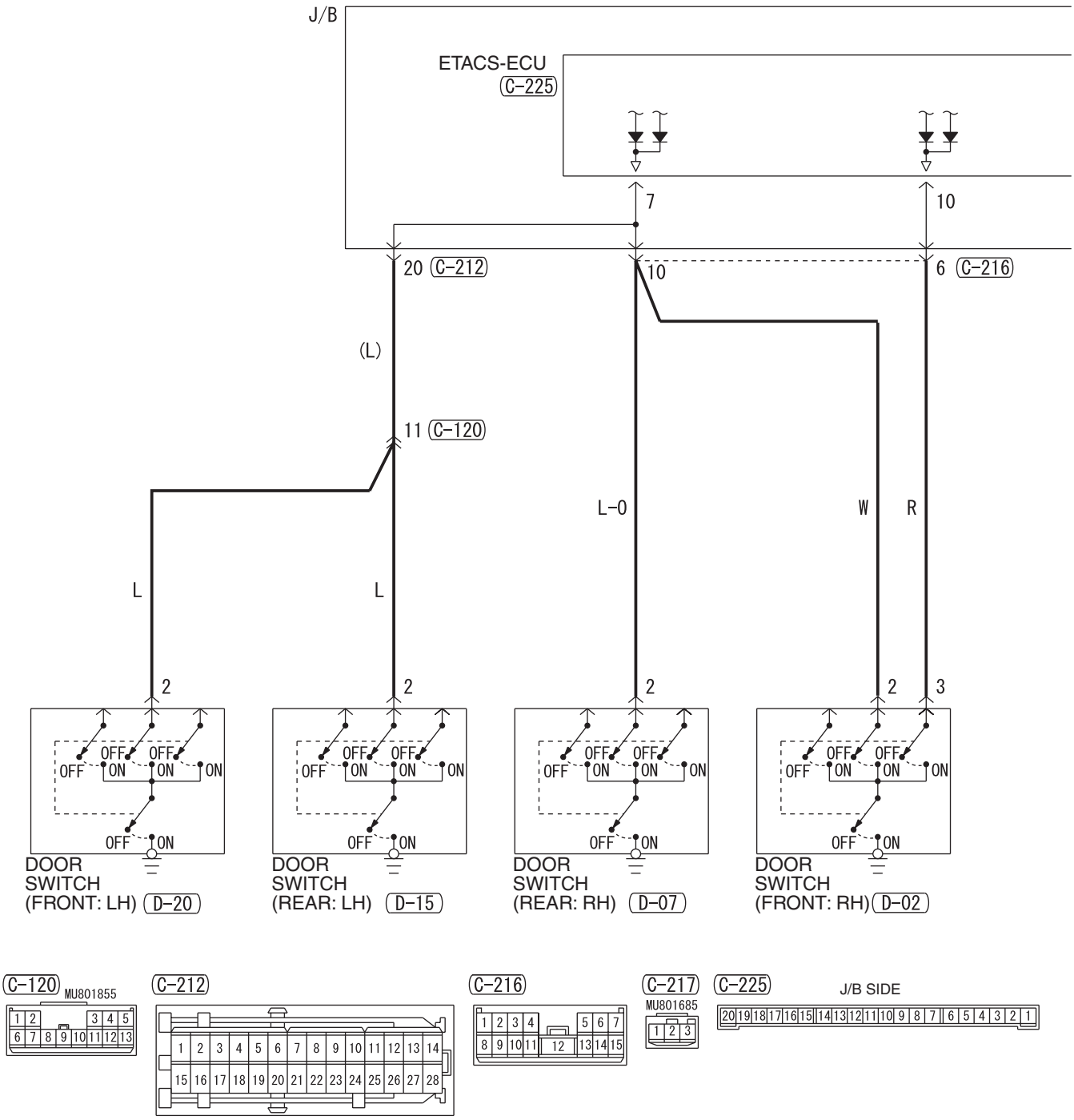

H6J11E12CA

6

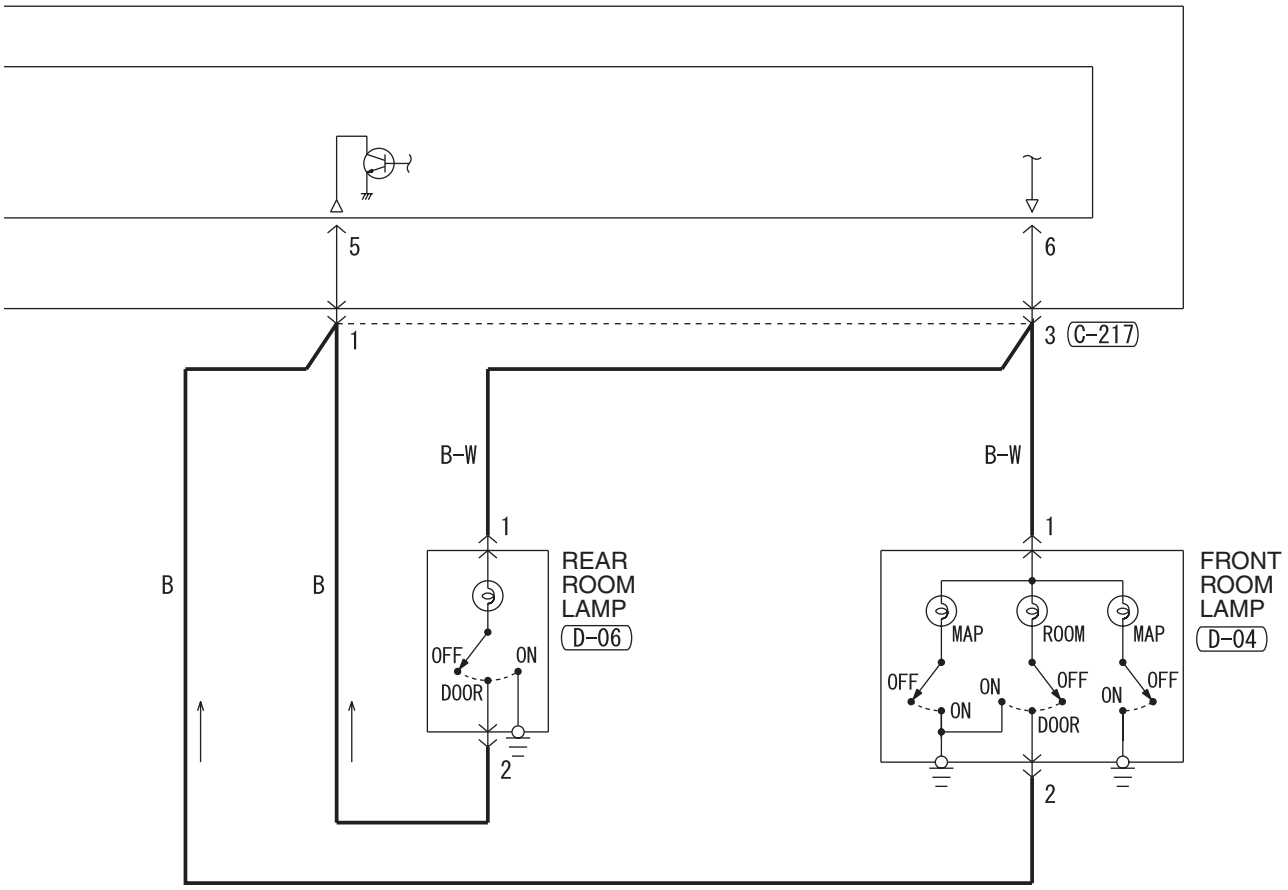

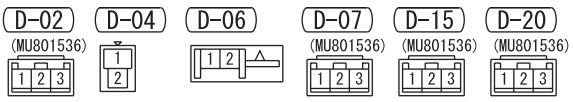

Wire colour code
B : Black LG : Light green G : Green L : Blue W : White Y : Yellow SB : Sky blue
BR : Brown O : Orange GR : Grey R : Red P : Pink V : Violet PU : Purple

H6J11E12CB

CENTRAL DOOR LOCKING SYSTEM <WAGON LHD WITH KEYLESS ENTRY>

M1901004703354

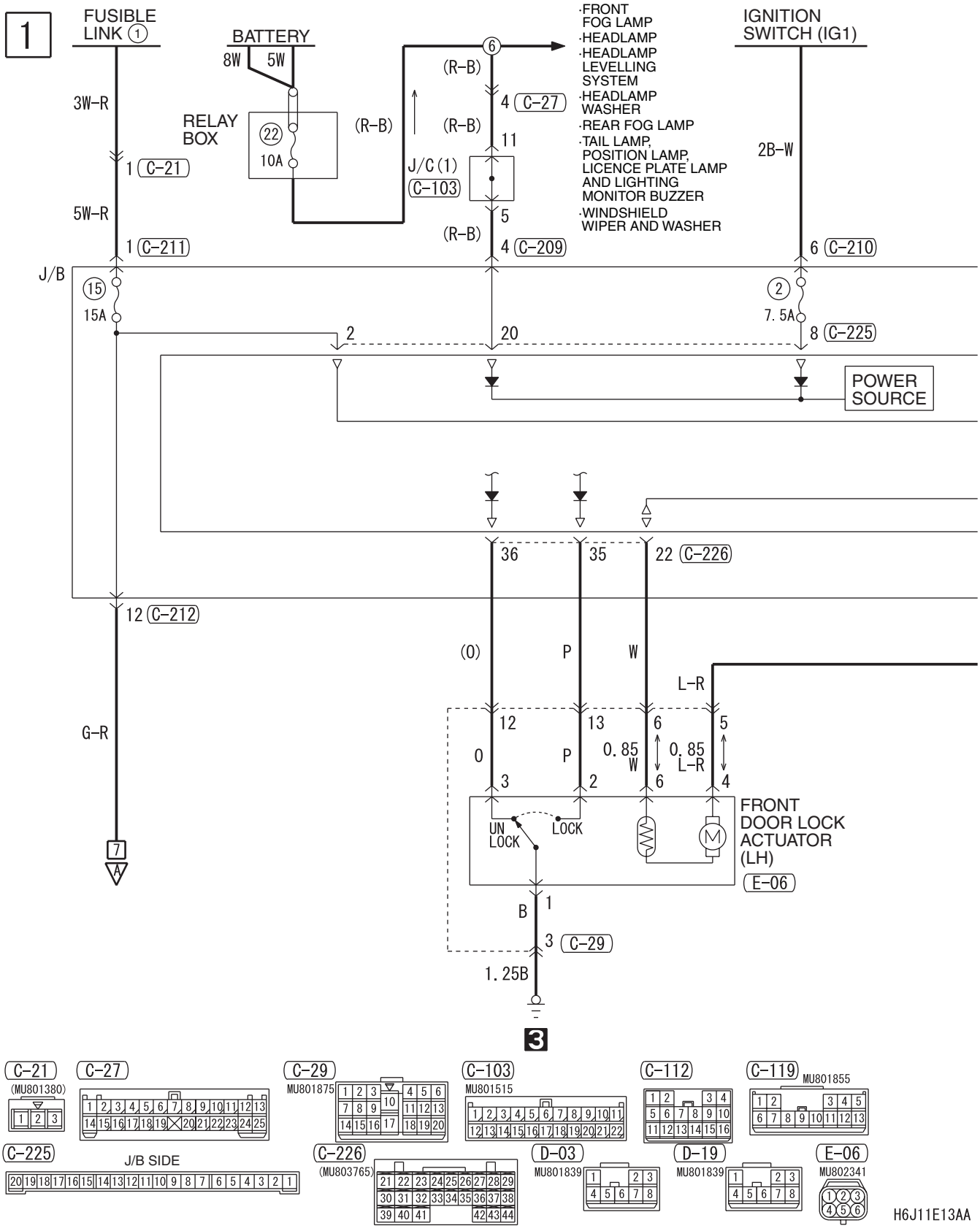

2

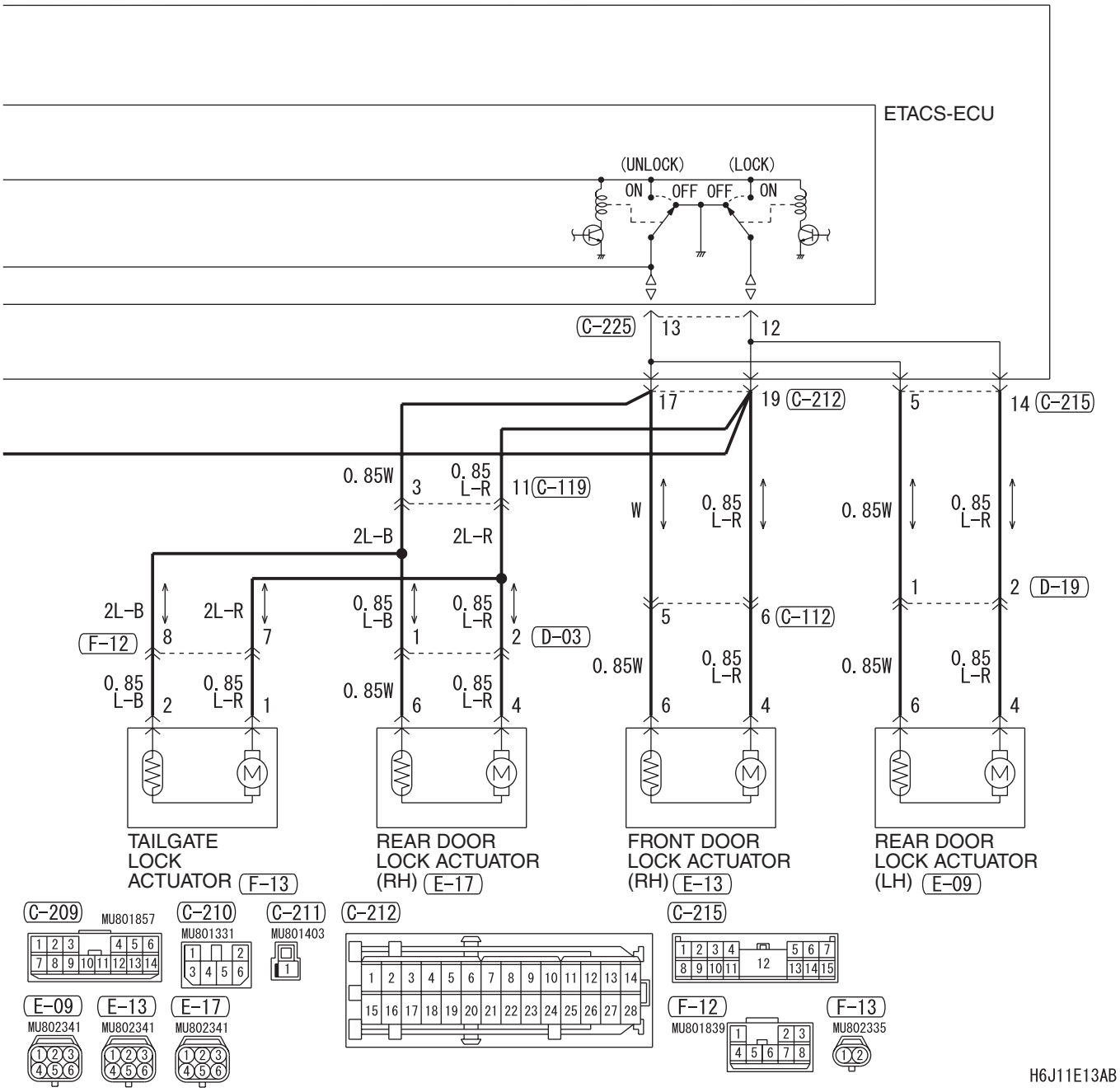
ETACS-ECU
(UNLOCK)
(LOCK)
ON
OFF
OFF
ON
C-225
13
12
17
19 C-212
5
14 C-215
0.85W
3
0.85 L-R
11 C-119
W
0.85 L-R
0.85W
0.85 L-R
2L-B
2L-R
2L-B
2L-R
F-12
8
7
0.85 L-B
0.85 L-R
1
2 D-03
5
6 C-112
1
2 D-19
0.85 L-B
2
0.85 L-R
1
0.85W
6
0.85 L-R
4
0.85W
0.85 L-R
6
4
0.85W
0.85 L-R
6
4
TAILGATE LOCK ACTUATOR F-13
REAR DOOR LOCK ACTUATOR (RH) E-17
FRONT DOOR LOCK ACTUATOR (RH) E-13
REAR DOOR LOCK ACTUATOR (LH) E-09
C-209
MU801857
C-210
MU801331
C-211
MU801403
C-212
C-215
E-09
MU802341
E-13
MU802341
E-17
MU802341
F-12
MU801839
F-13
MU802335
H6J11E13AB

CENTRAL DOOR LOCKING SYSTEM <WAGON LHD WITH KEYLESS ENTRY> (CONTINUED)

3

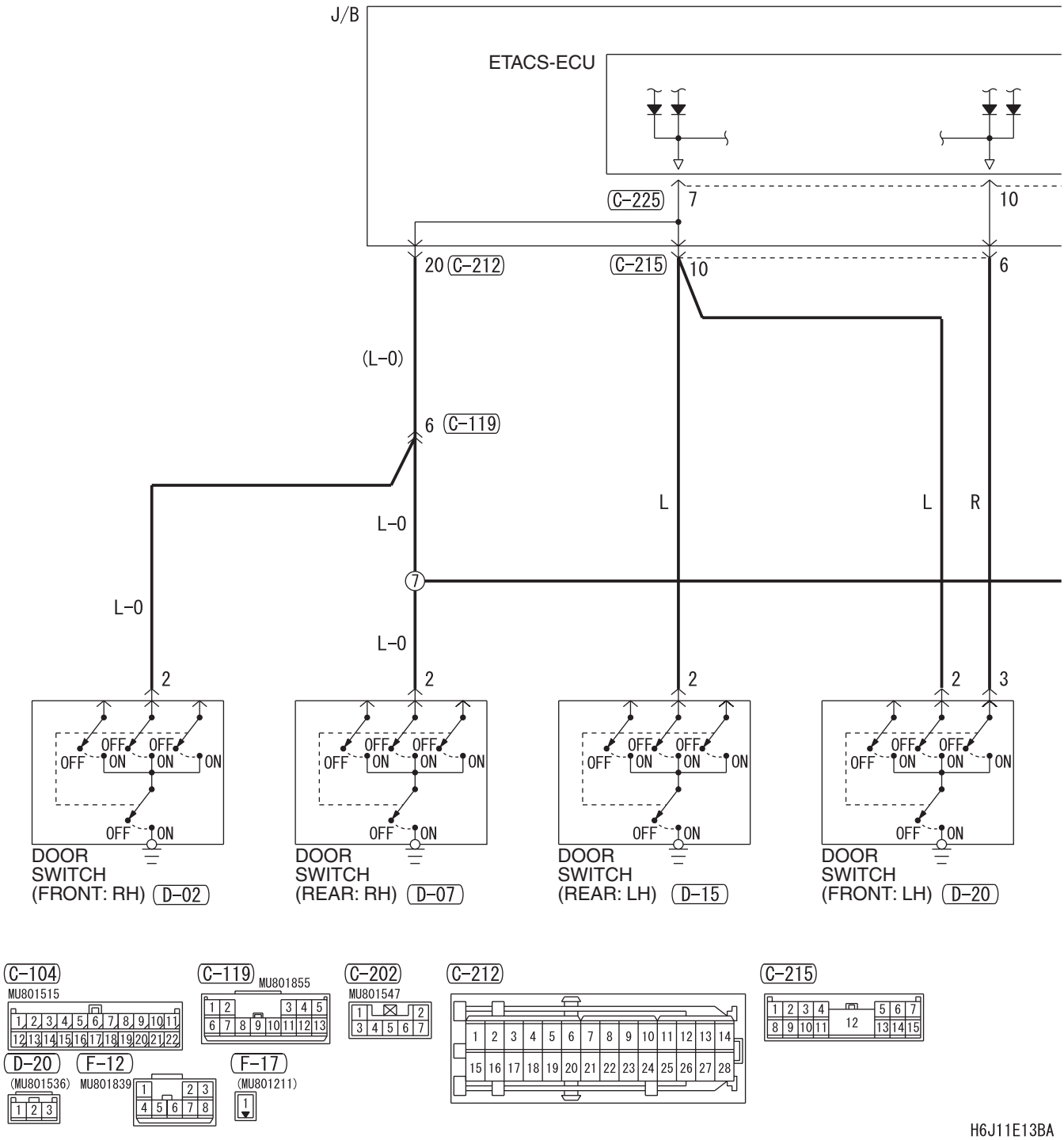

4

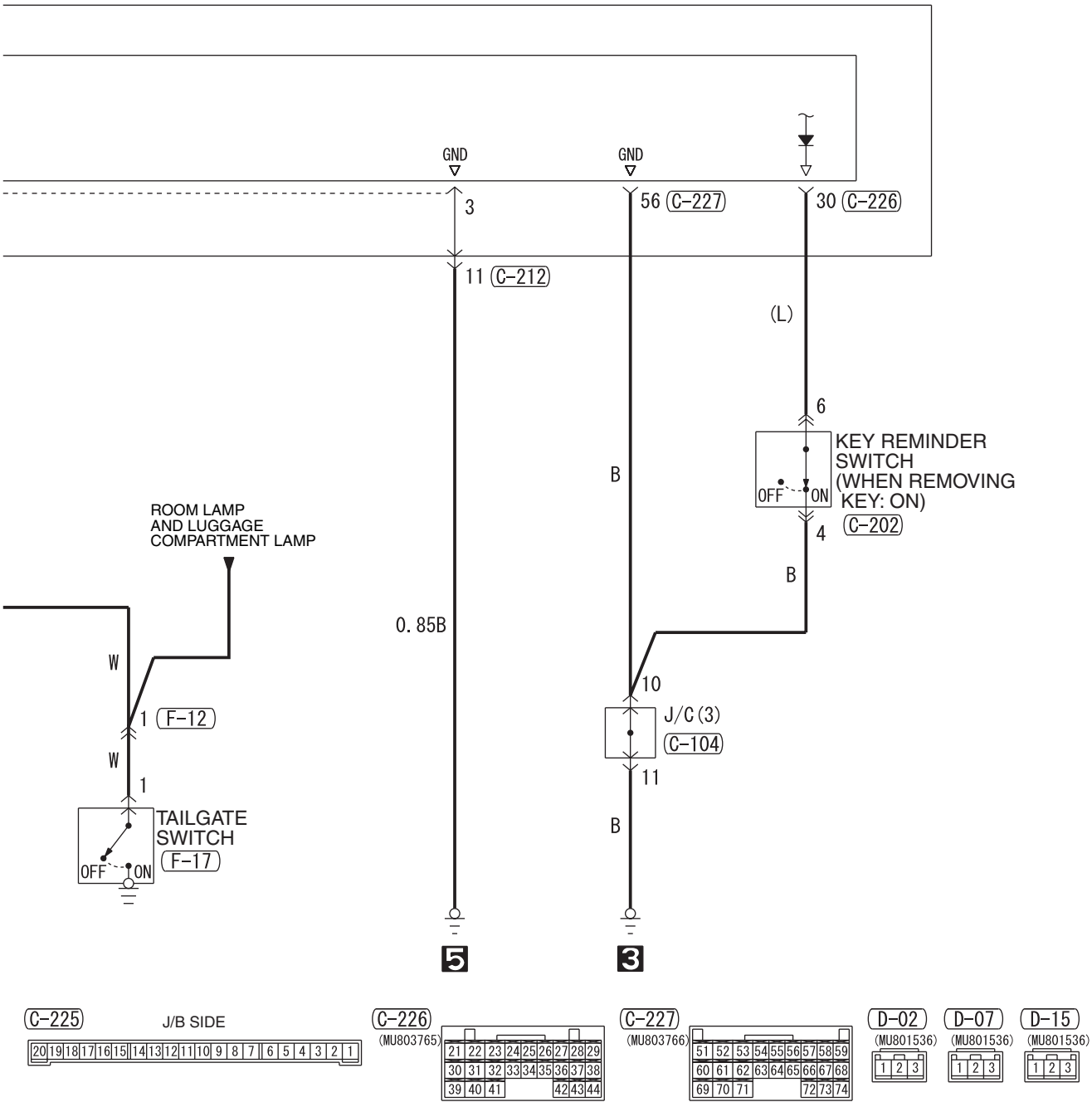

Wire colour code
B : Black LG : Light green G : Green L : Blue W : White Y : Yellow SB : Sky blue
BR : Brown O : Orange GR : Grey R : Red P : Pink V : Violet PU : Purple

H6J11E13BB

CENTRAL DOOR LOCKING SYSTEM <WAGON LHD WITH KEYLESS ENTRY> (CONTINUED)

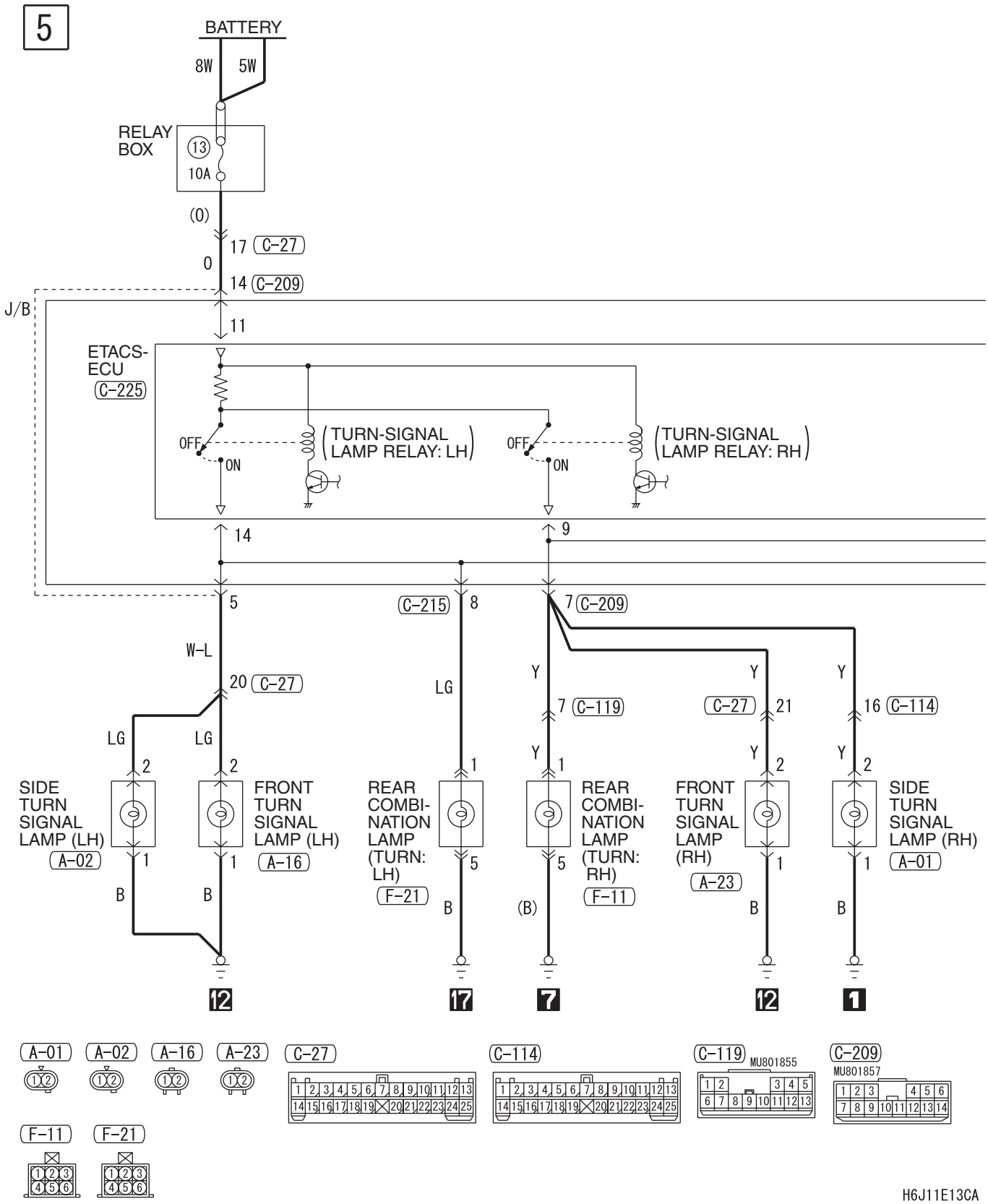

6

KEYLESS ENTRY TRANSMITTER

KEYLESS ENTRY RECEIVER

3 (C-217)
6
5
22
27 (C-212)
1
(LG)
(P)
TURN-SIGNAL LAMP AND HAZARD WARNING LAMP

B-W
1
FRONT ROOM LAMP (D-04)
MAP
ROOM
MAP
ON
OFF
OFF
ON
DOOR
ON
OFF
2
W

B-W
1
REAR ROOM LAMP (D-06)
ON
OFF
DOOR
2
B

<VEHICLES WITH CARTAIN AIR BAG>

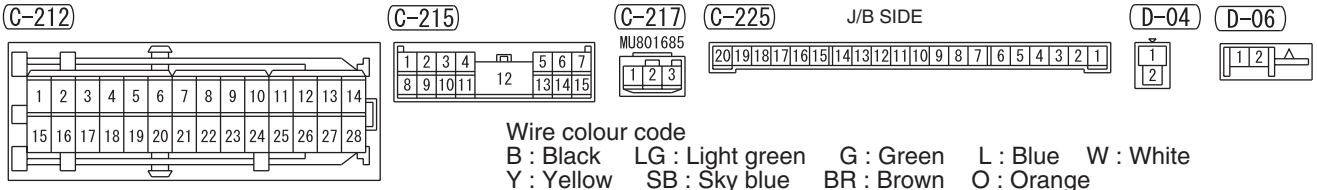

Wire colour code
B : Black LG : Light green G : Green L : Blue W : White
Y : Yellow SB : Sky blue BR : Brown O : Orange
GR : Grey R : Red P : Pink V : Violet PU : Purple

H6J11E13CB

CENTRAL DOOR LOCKING SYSTEM <WAGON LHD WITH KEYLESS ENTRY> (CONTINUED)

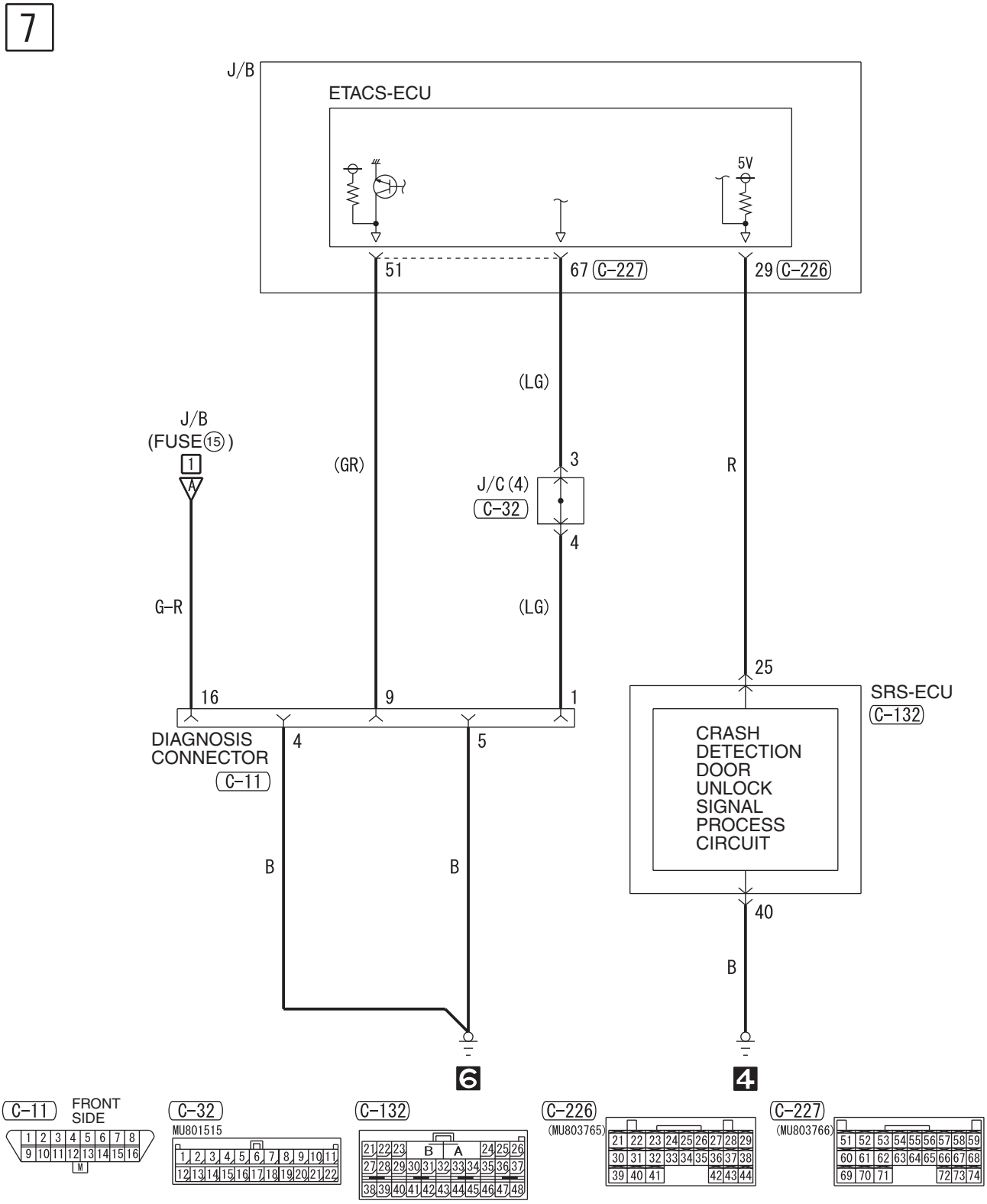

Wire colour code
B : Black LG : Light green G : Green L : Blue W : White Y : Yellow SB : Sky blue
BR : Brown O : Orange GR : Grey R : Red P : Pink V : Violet PU : Purple

H6J11E13DA

NOTES

CENTRAL DOOR LOCKING SYSTEM <WAGON RHD WITH KEYLESS ENTRY>

M1901004703365

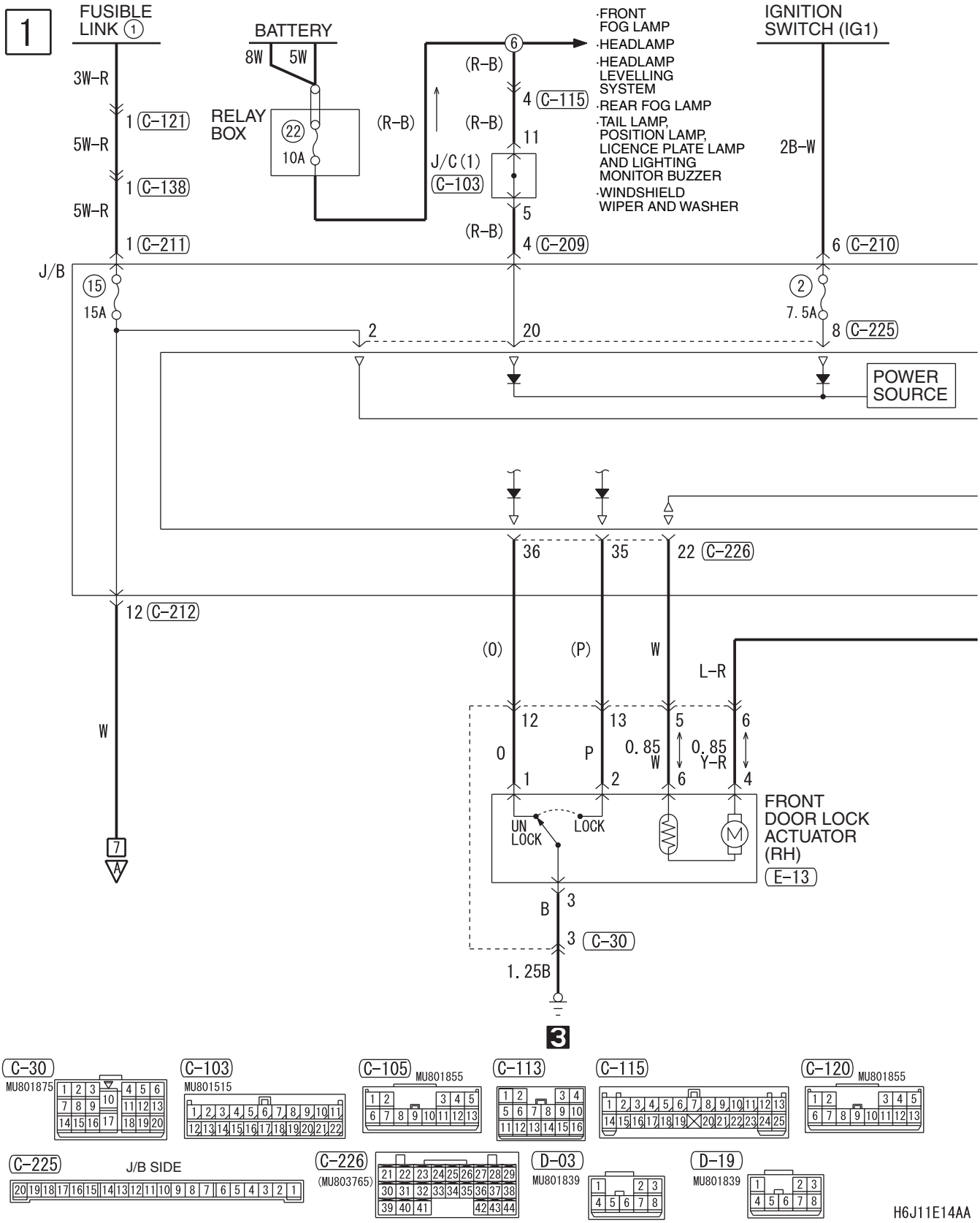

2

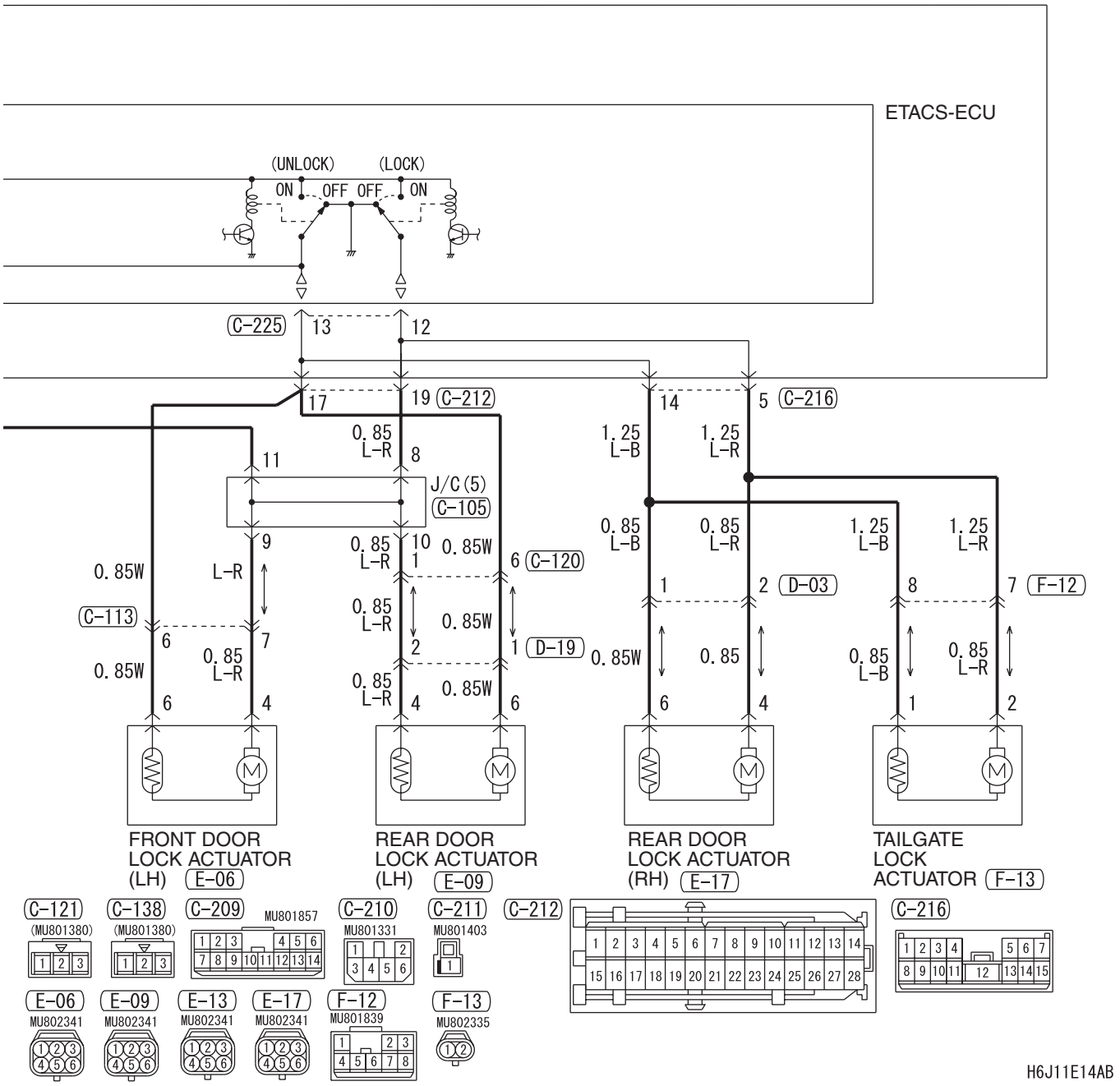
ETACS-ECU
(UNLOCK)
(LOCK)
ON
OFF
OFF
ON
C-225
13
12
17
19
C-212
14
5
C-216
0.85
L-R
8
11
J/C (5)
C-105
1.25
L-B
1.25
L-R
9
10
0.85W
6
C-120
0.85
L-B
0.85
L-R
1.25
L-B
1.25
L-R
0.85W
L-R
1
2
D-03
8
7
F-12
C-113
6
7
2
1
D-19
0.85W
0.85
0.85
L-B
0.85
L-R
0.85W
0.85
L-R
0.85W
0.85
L-R
0.85W
6
4
4
6
6
4
1
2
FRONT DOOR
LOCK ACTUATOR
(LH)
E-06
REAR DOOR
LOCK ACTUATOR
(LH)
E-09
REAR DOOR
LOCK ACTUATOR
(RH)
E-17
TAILGATE
LOCK
ACTUATOR
F-13
C-121
(MU801380)
C-138
(MU801380)
C-209
MU801857
C-210
MU801331
C-211
MU801403
C-212
C-216
E-06
MU802341
E-09
MU802341
E-13
MU802341
E-17
MU802341
F-12
MU801839
F-13
MU802335
H6J11E14AB

CENTRAL DOOR LOCKING SYSTEM <WAGON RHD WITH KEYLESS ENTRY> (CONTINUED)

3

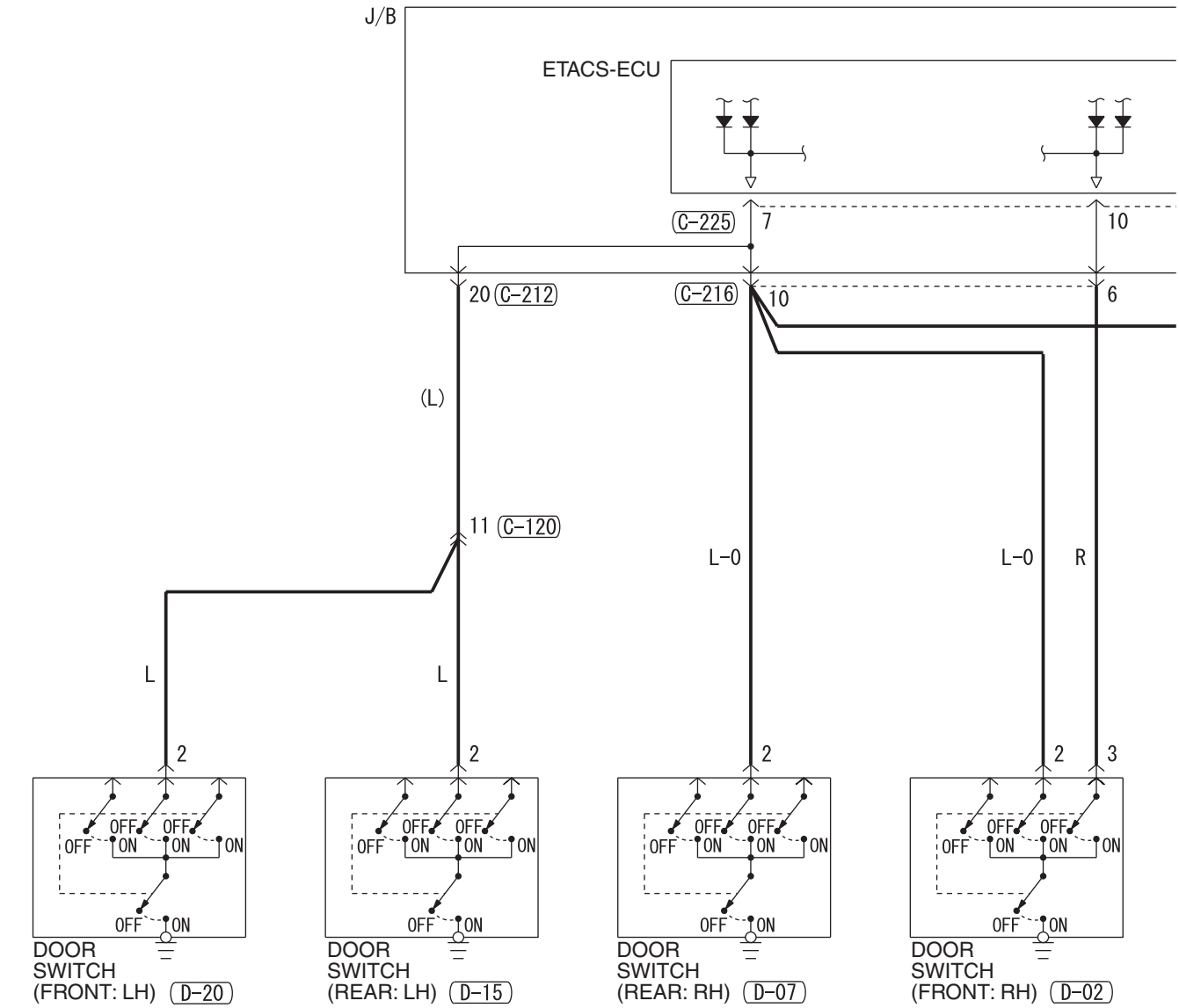

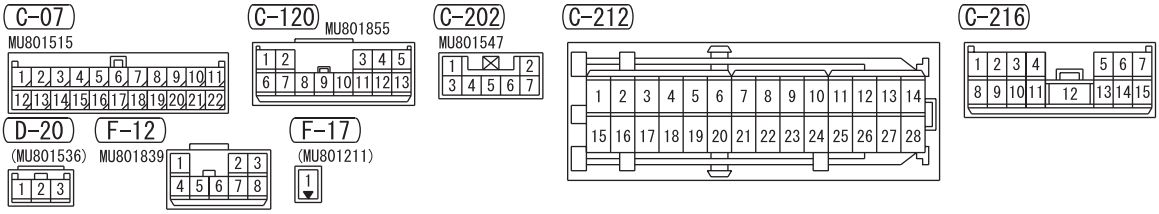

H6J11E14BA

4

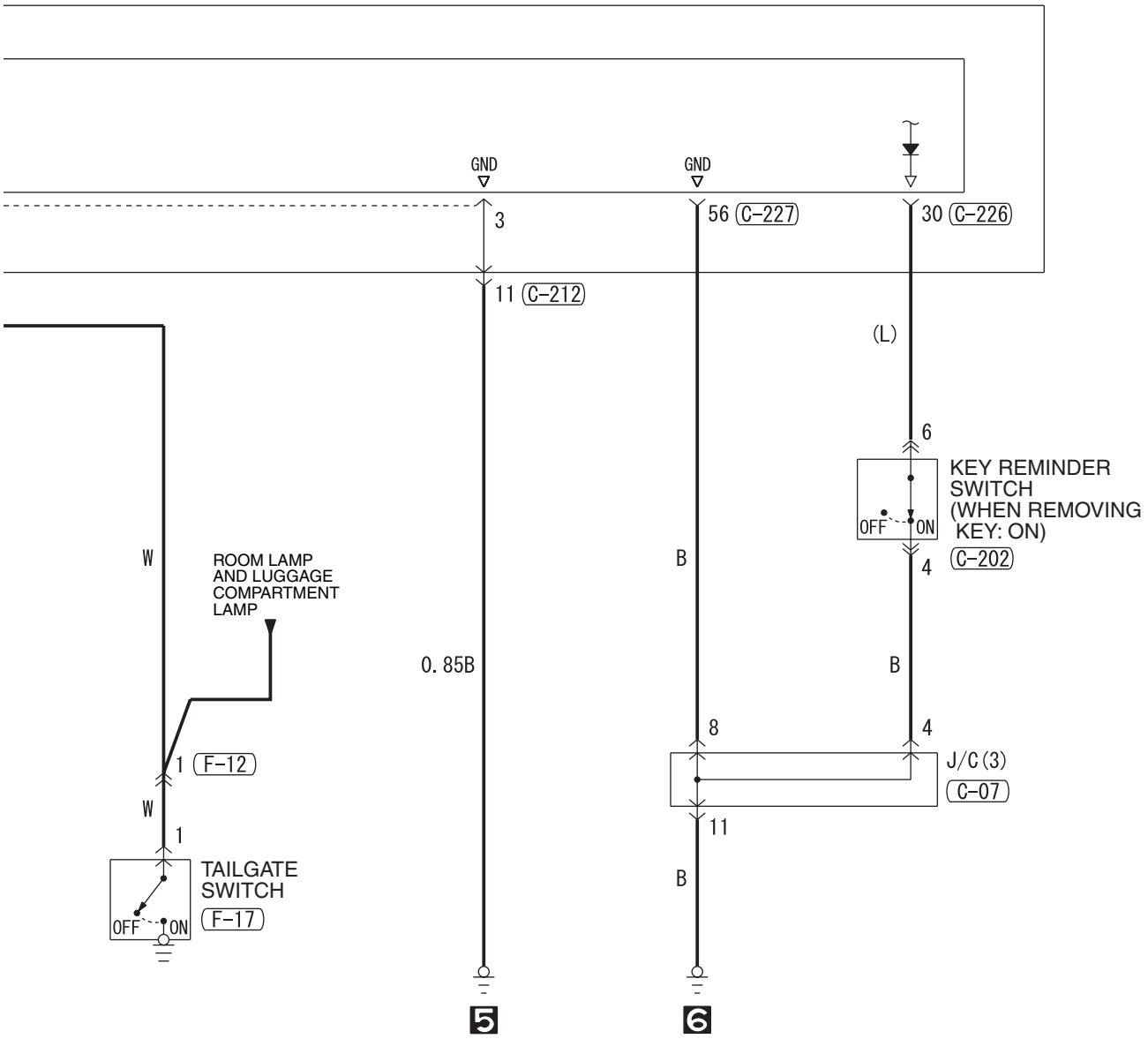

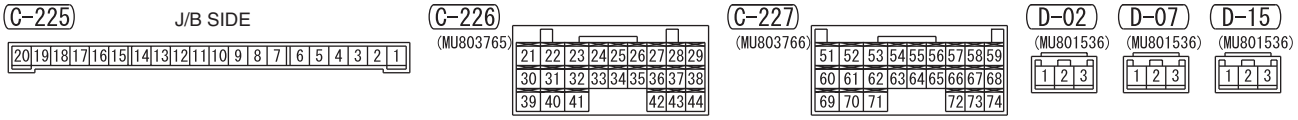

Wire colour code
B : Black LG : Light green G : Green L : Blue W : White Y : Yellow SB : Sky blue
BR : Brown O : Orange GR : Grey R : Red P : Pink V : Violet PU : Purple

H6J11E14BB

CENTRAL DOOR LOCKING SYSTEM <WAGON RHD WITH KEYLESS ENTRY> (CONTINUED)

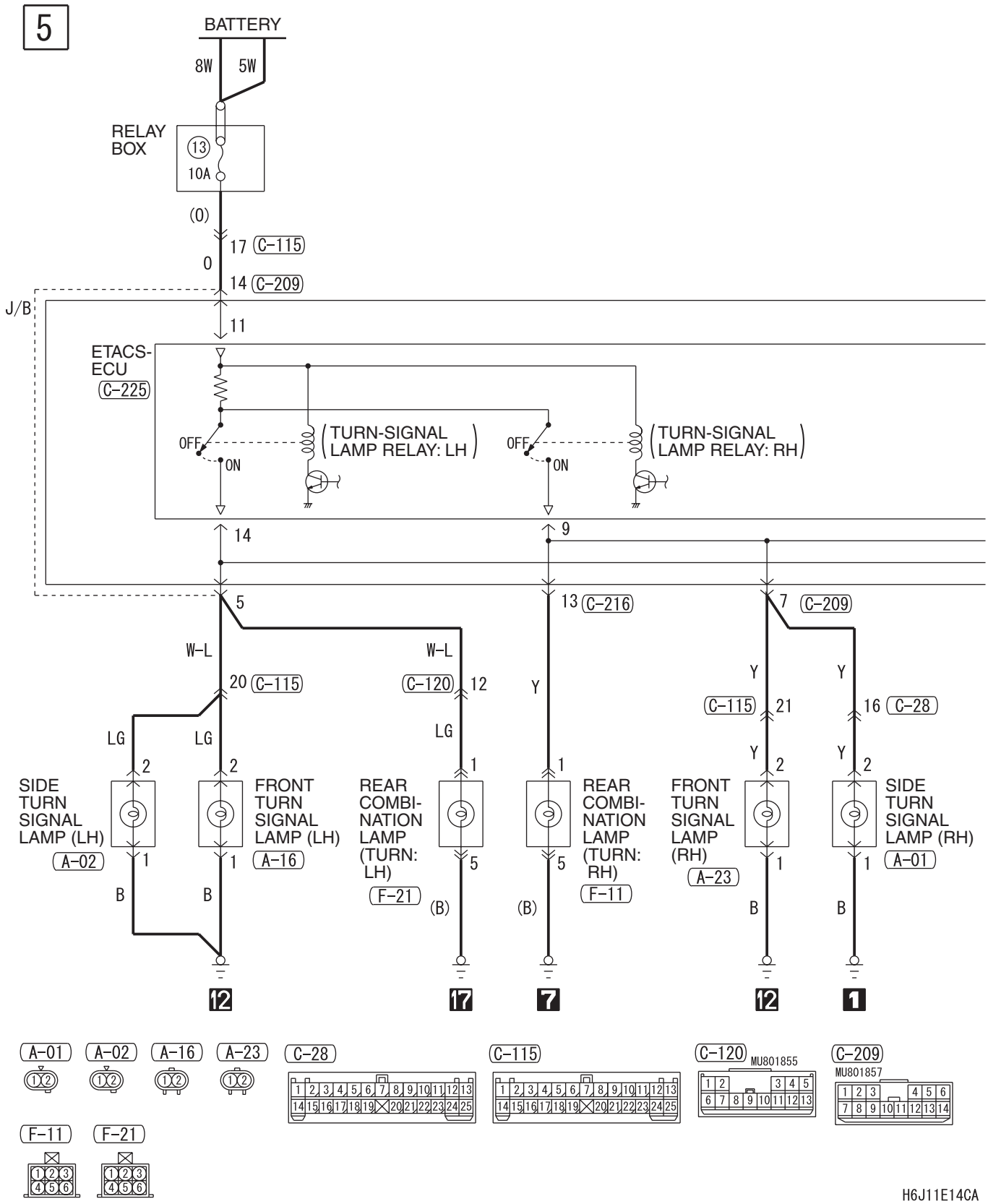

6

KEYLESS ENTRY TRANSMITTER

KEYLESS ENTRY RECEIVER

3 (C-217)
6
5
22
27 (C-212)
1
(LG)
(P)
TURN-SIGNAL LAMP AND HAZARD WARNING LAMP

B-W
1
FRONT ROOM LAMP
(D-04)
MAP
ROOM
MAP
ON
OFF
OFF
ON
DOOR
ON
OFF
2
W

B-W
1
REAR ROOM LAMP
(D-06)
ON
OFF
DOOR
2
B

<VEHICLES WITH CARTAIN AIR BAG>

(C-212)

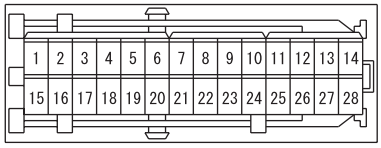

(C-216)

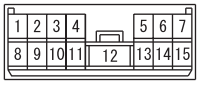

(C-217)

(C-225)

J/B SIDE

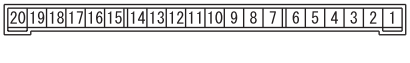

(D-04)

(D-06)

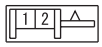

Wire colour code
B : Black LG : Light green G : Green L : Blue W : White
Y : Yellow SB : Sky blue BR : Brown O : Orange
GR : Grey R : Red P : Pink V : Violet PU : Purple

H6J11E14CB

CENTRAL DOOR LOCKING SYSTEM <WAGON RHD WITH KEYLESS ENTRY> (CONTINUED)

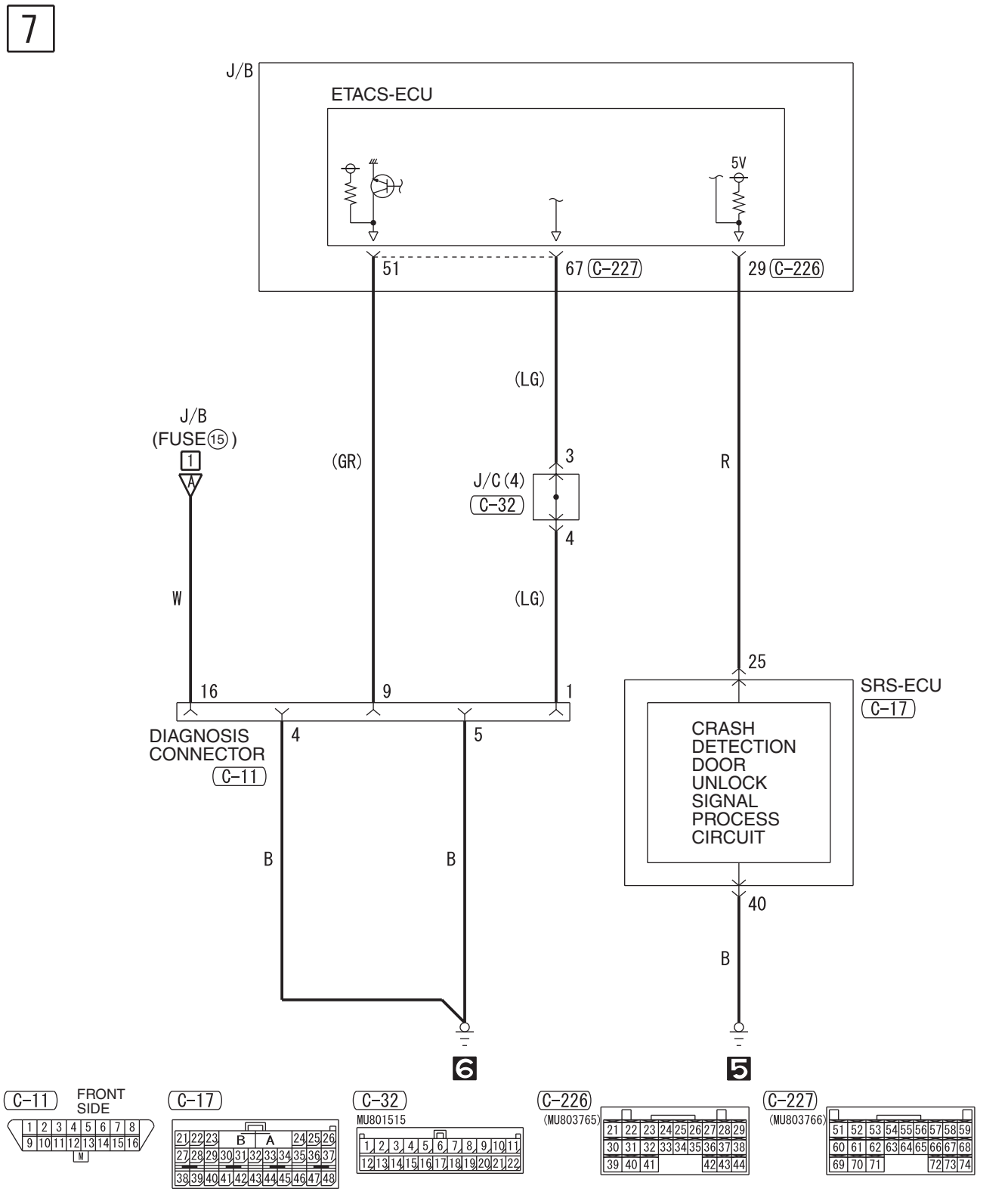

Wire colour code
B : Black LG : Light green G : Green L : Blue W : White Y : Yellow SB : Sky blue
BR : Brown O : Orange GR : Grey R : Red P : Pink V : Violet PU : Purple

H6J11E14DA

NOTES

HEATER

HEATER <LHD>

M1901013300559

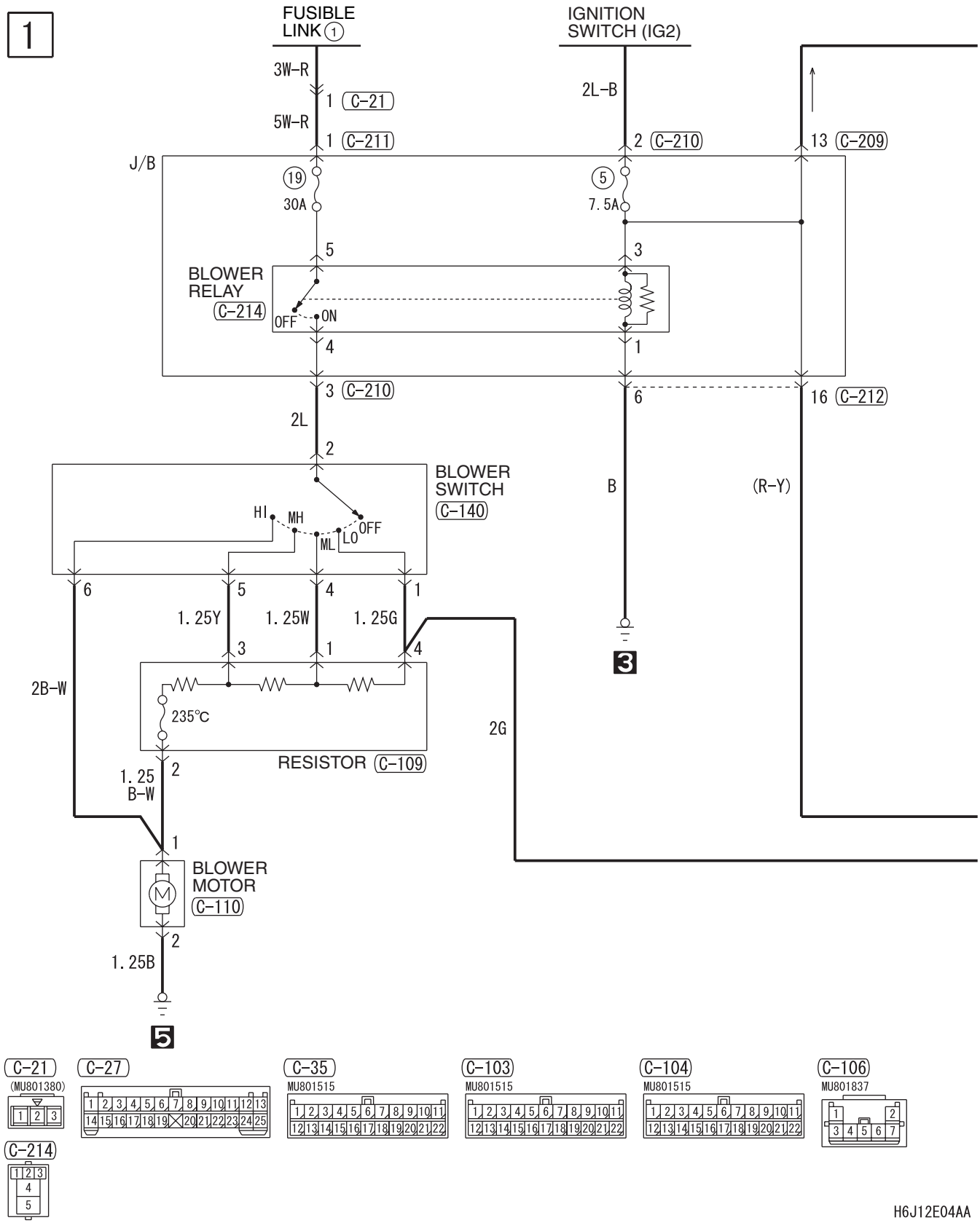

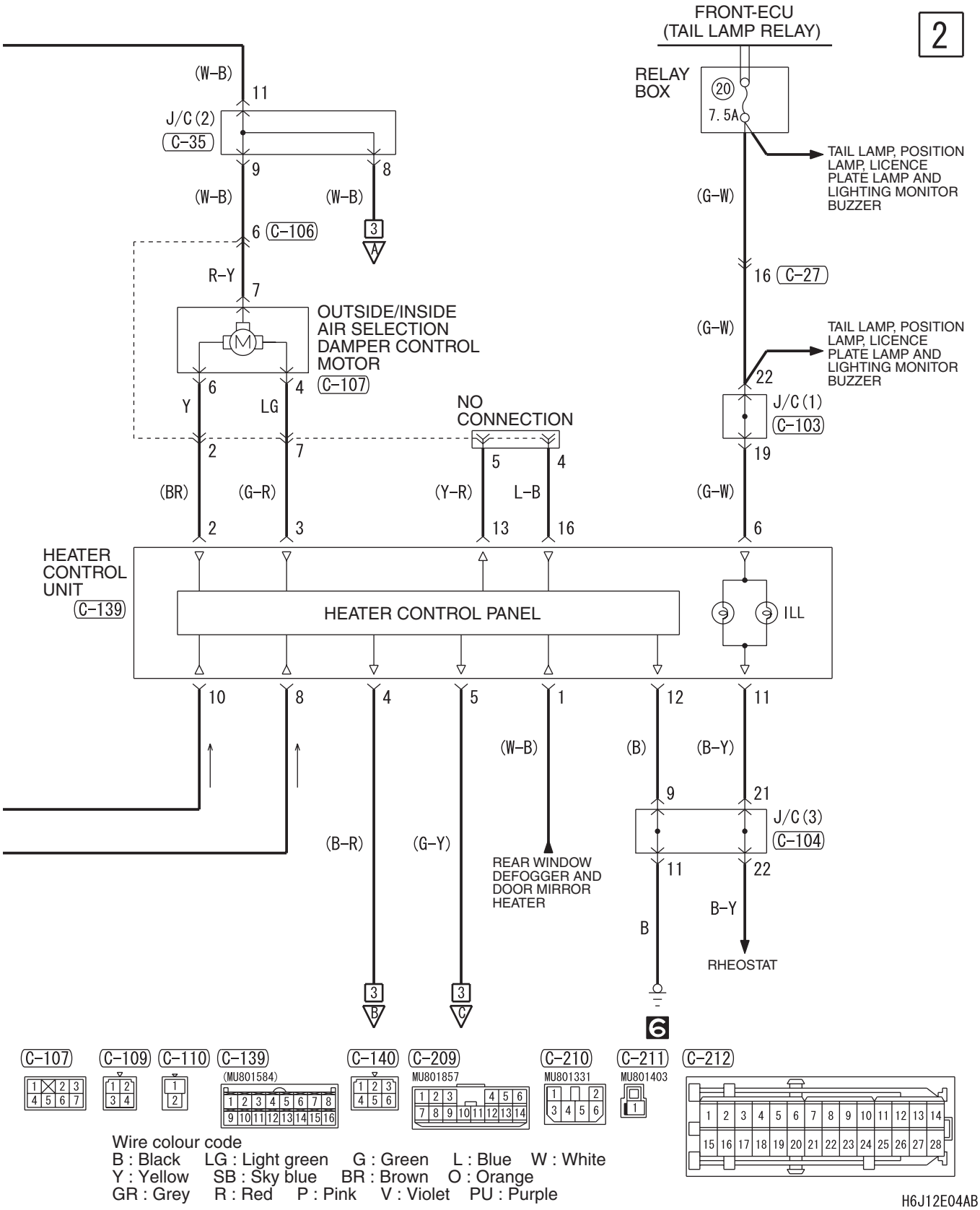

Wire colour code
B : Black LG : Light green G : Green L : Blue W : White
Y : Yellow SB : Sky blue BR : Brown O : Orange
GR : Grey R : Red P : Pink V : Violet PU : Purple

H6J12E04AB

HEATER <LHD> (CONTINUED)

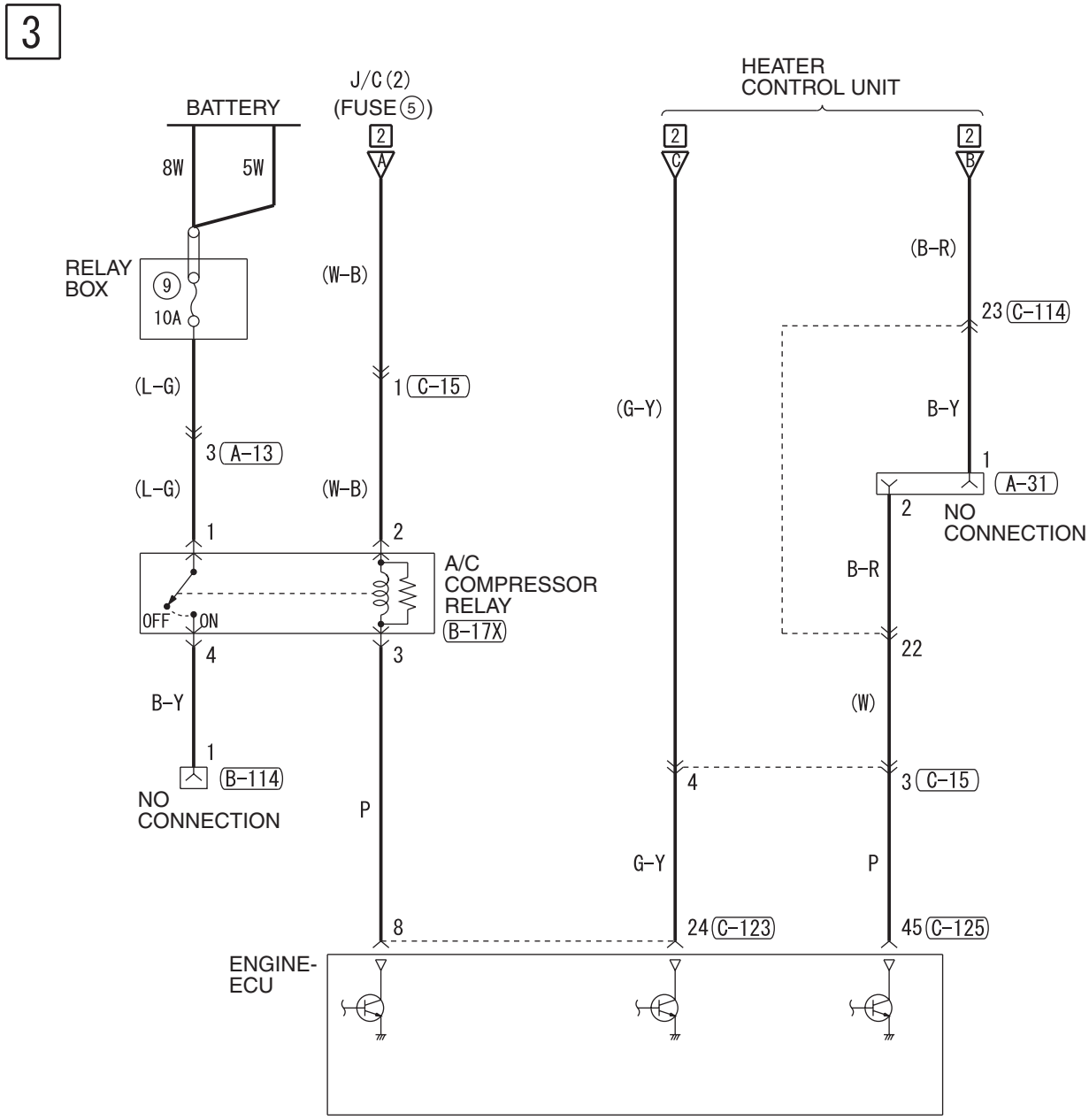

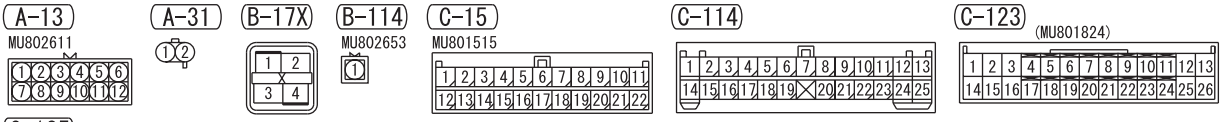

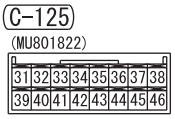

Wire colour code
B : Black LG : Light green G : Green L : Blue W : White Y : Yellow SB : Sky blue
BR : Brown O : Orange GR : Grey R : Red P : Pink V : Violet PU : Purple

H6J12E04BA

NOTES

HEATER <RHD>

M1901013300560

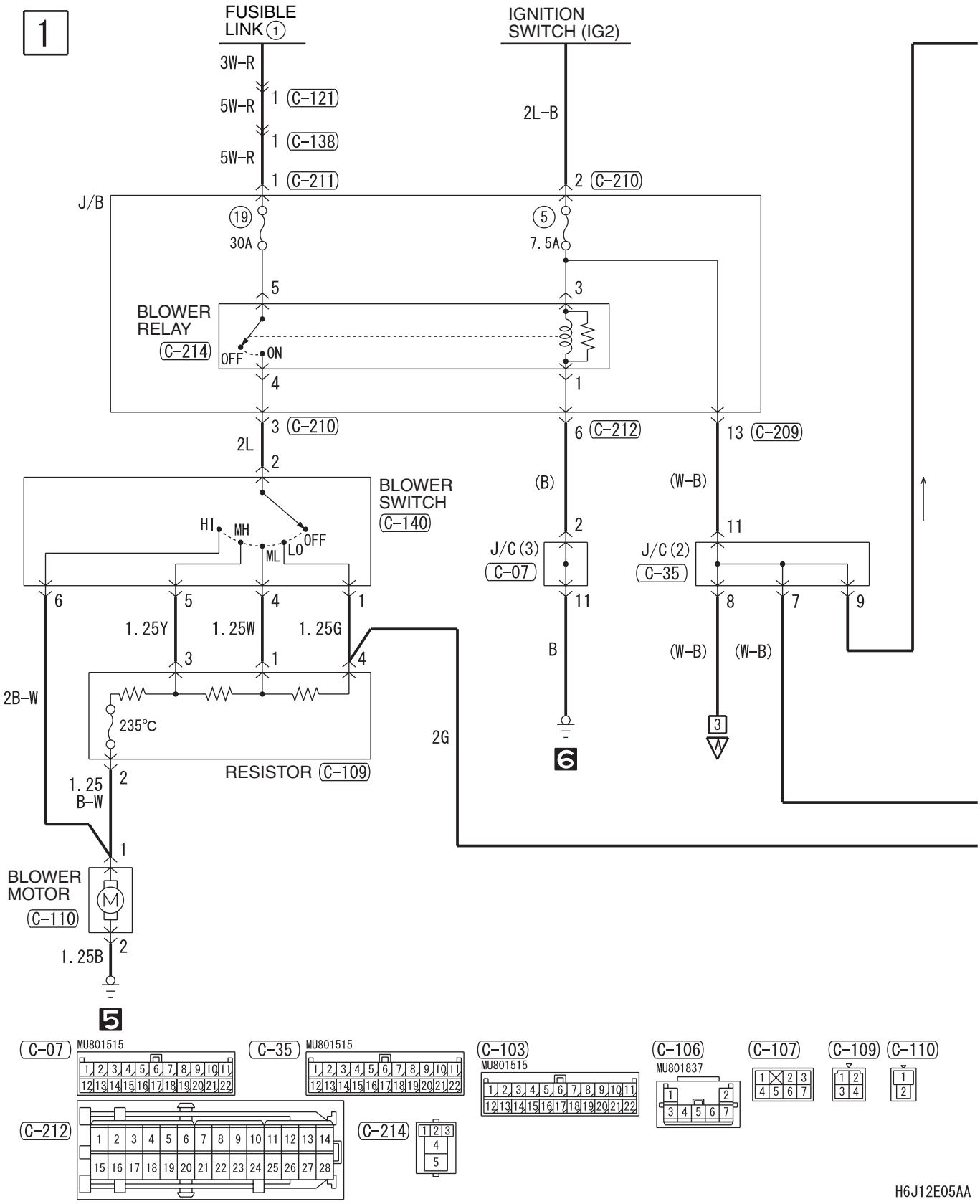

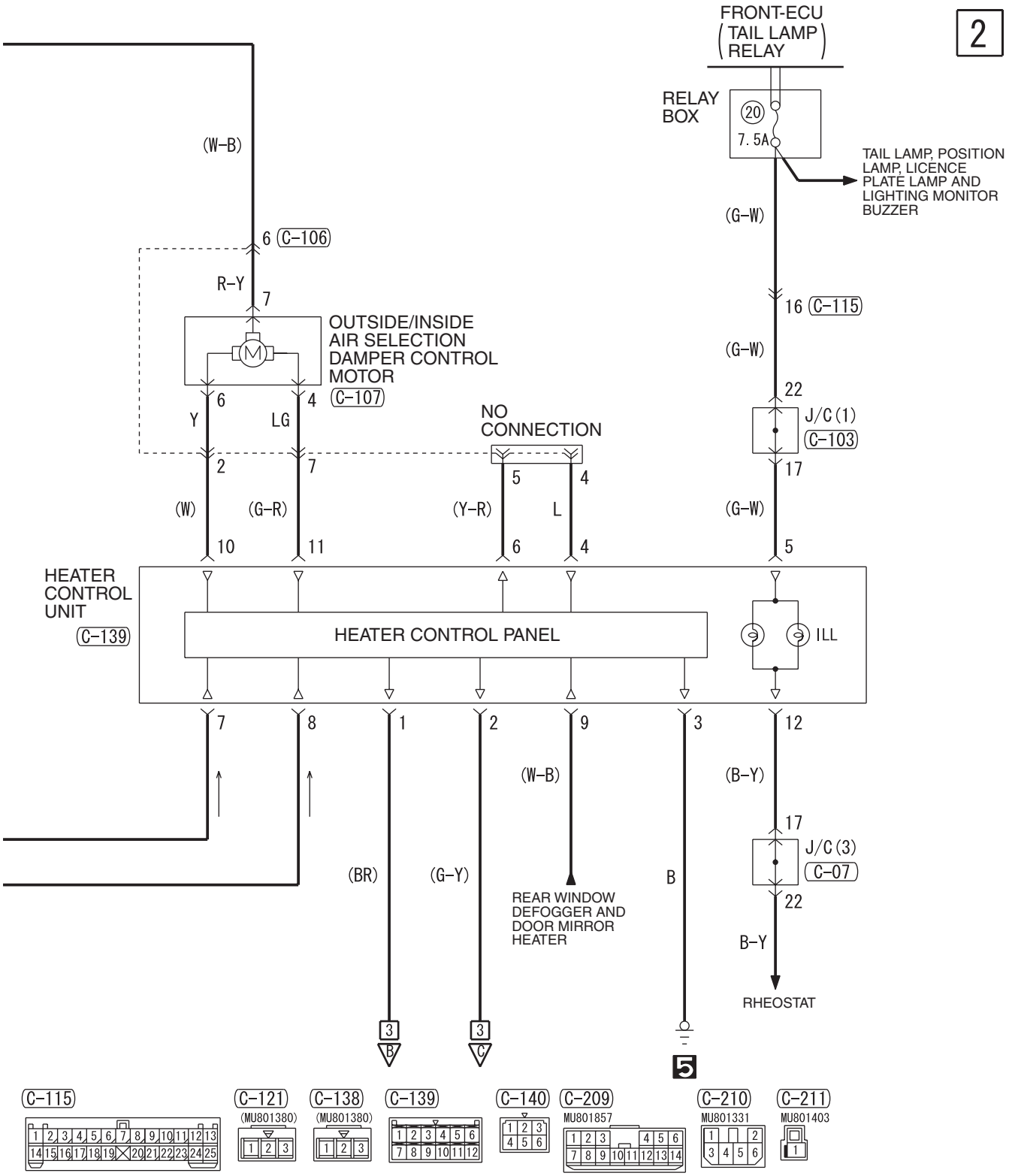

Wire colour code
B : Black LG : Light green G : Green L : Blue W : White Y : Yellow SB : Sky blue
BR : Brown O : Orange GR : Grey R : Red P : Pink V : Violet PU : Purple

H6J12E05AB

HEATER <RHD> (CONTINUED)

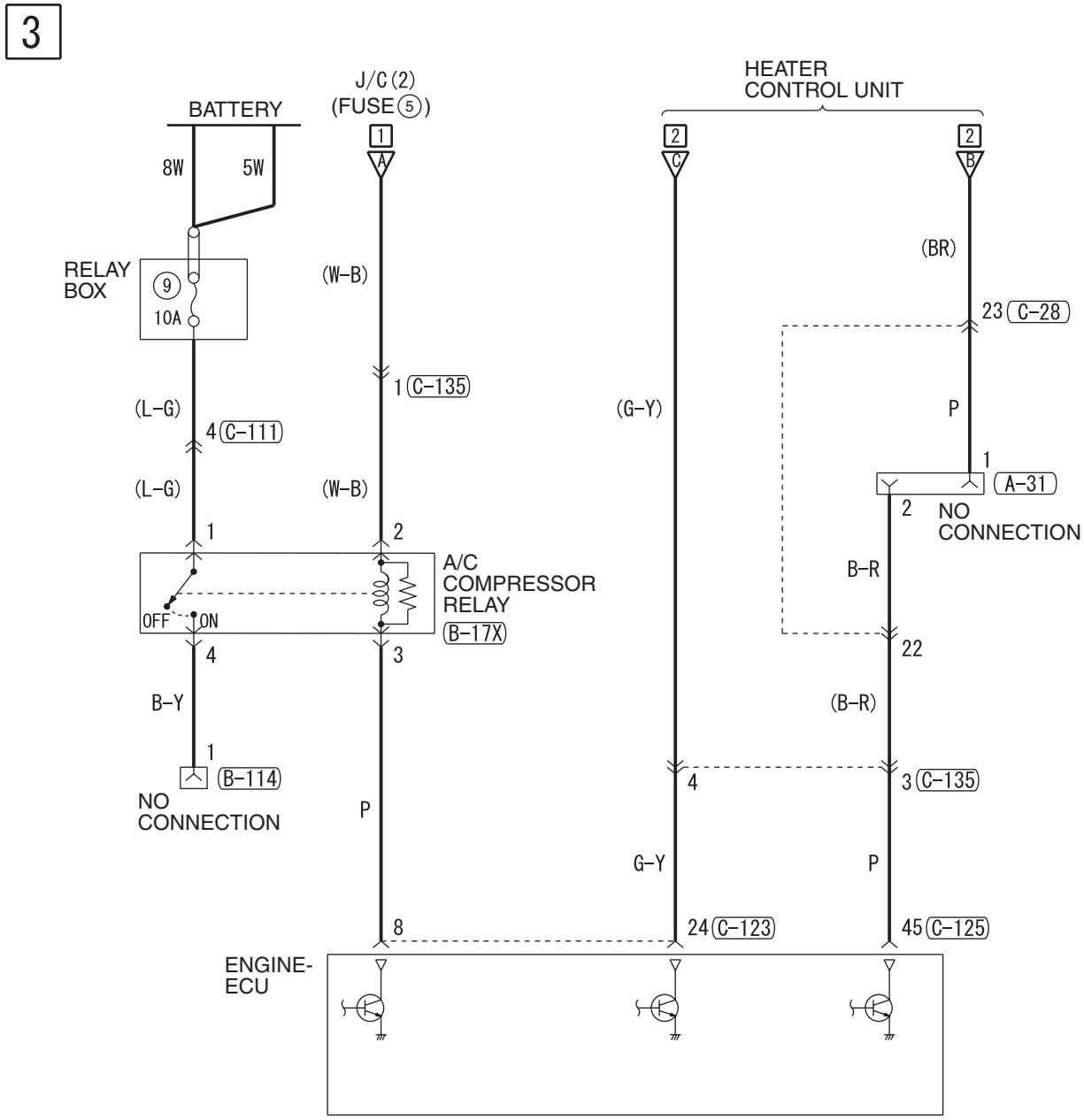

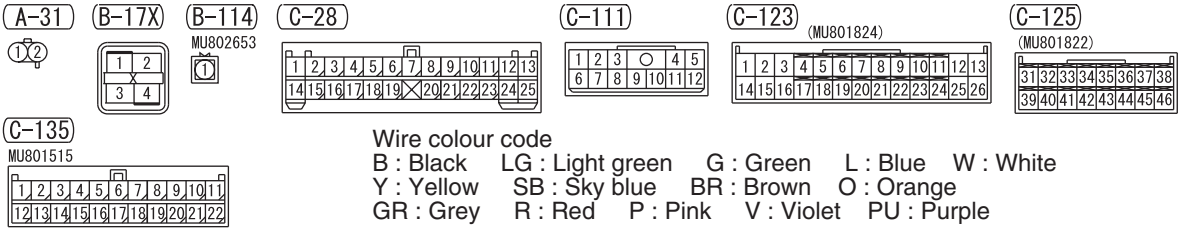

Wire colour code
B : Black LG : Light green G : Green L : Blue W : White
Y : Yellow SB : Sky blue BR : Brown O : Orange
GR : Grey R : Red P : Pink V : Violet PU : Purple

H6J12E05BA

NOTES

MANUAL AIR CONDITIONER

MANUAL AIR CONDITIONER <LHD>

M1901005502059

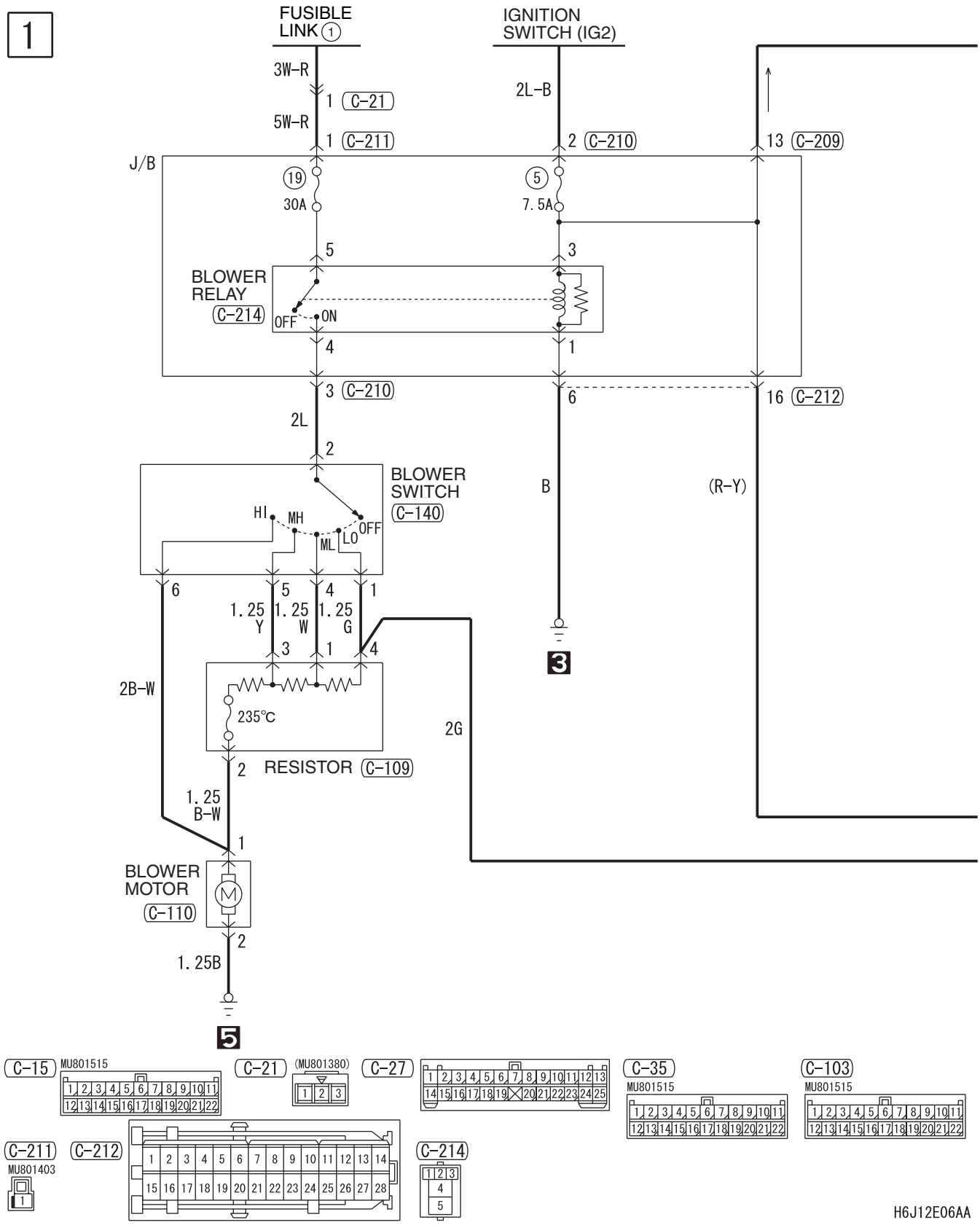

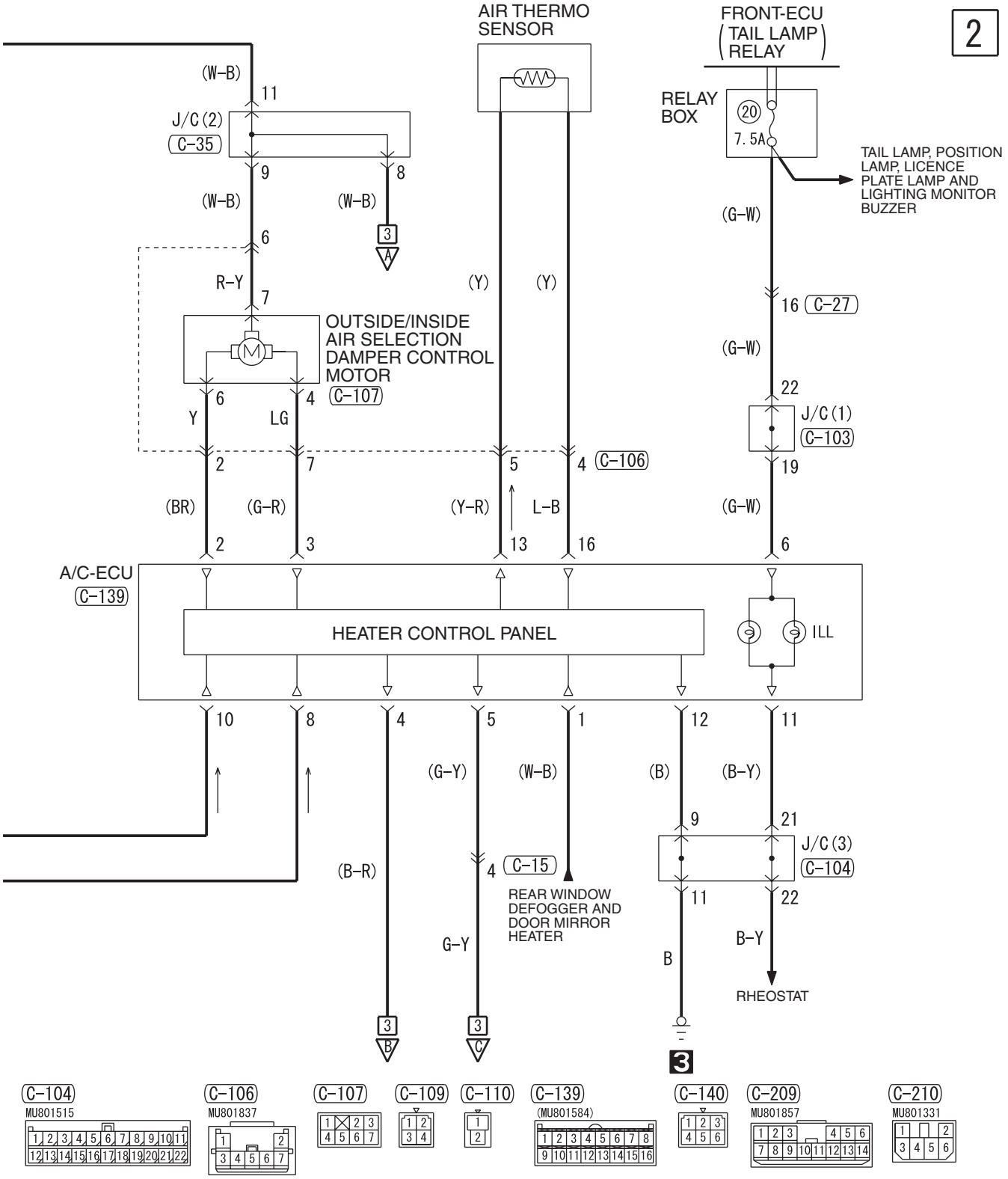

Wire colour code
B : Black LG : Light green G : Green L : Blue W : White Y : Yellow SB : Sky blue
BR : Brown O : Orange GR : Grey R : Red P : Pink V : Violet PU : Purple

H6J12E06AB

MANUAL AIR CONDITIONER <LHD> (CONTINUED)

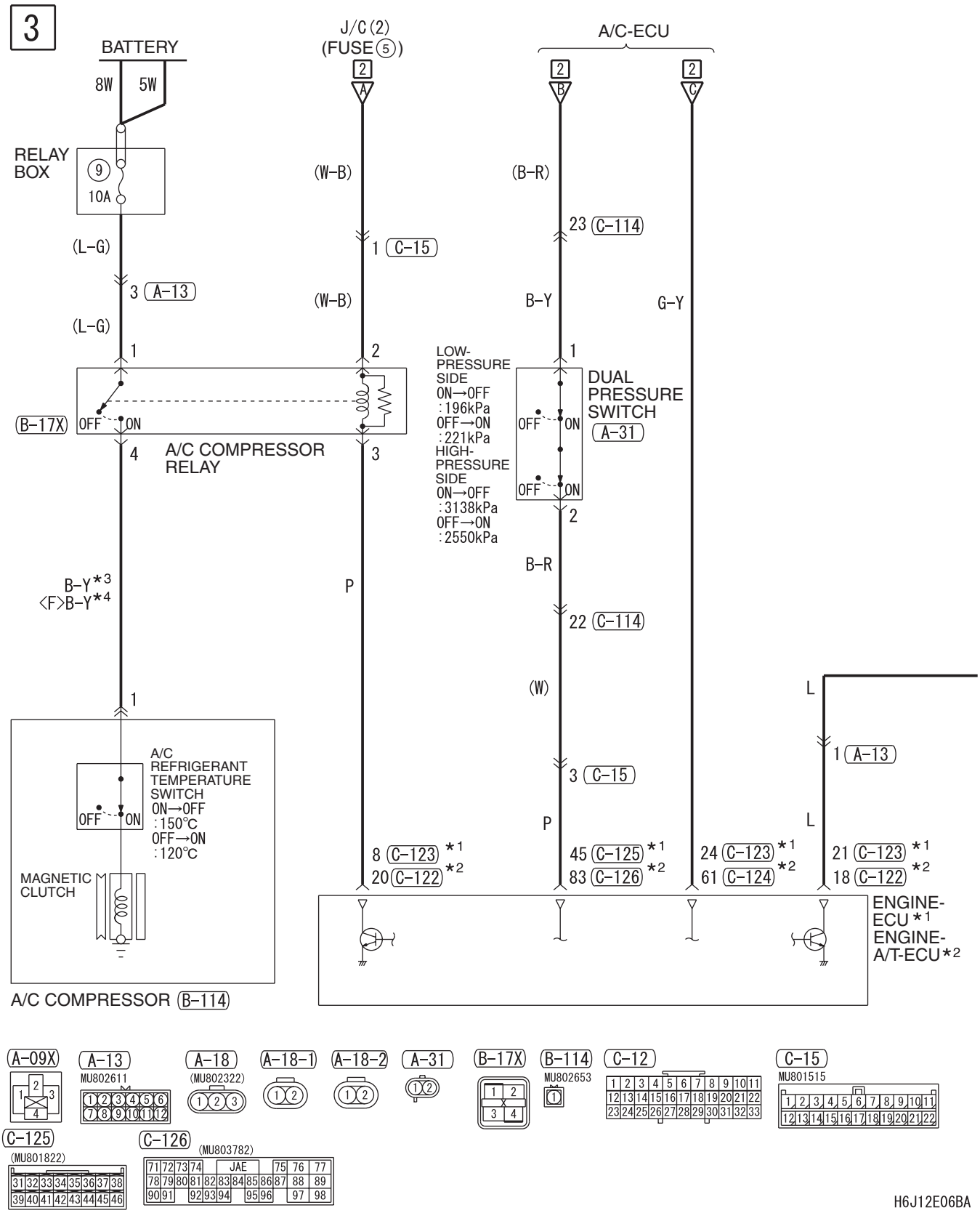

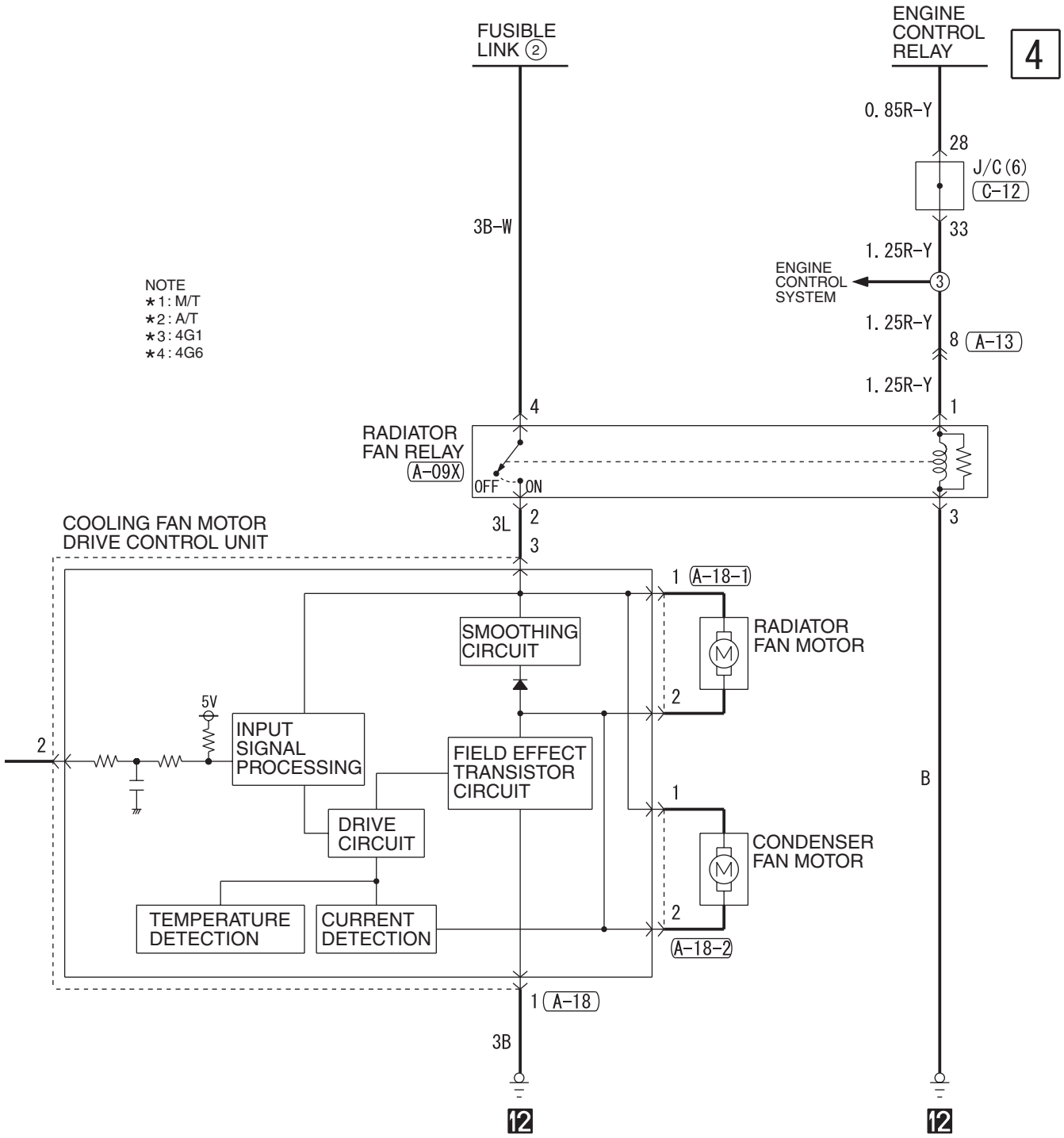

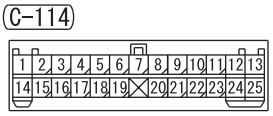

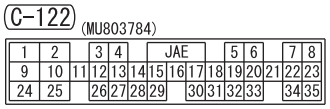

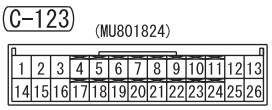

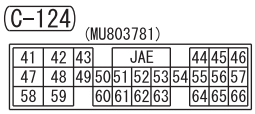

Wire colour code
B : Black LG : Light green G : Green L : Blue W : White Y : Yellow SB : Sky blue
BR : Brown O : Orange GR : Grey R : Red P : Pink V : Violet PU : Purple

H6J12E06BB

MANUAL AIR CONDITIONER <RHD>

M1901005502060

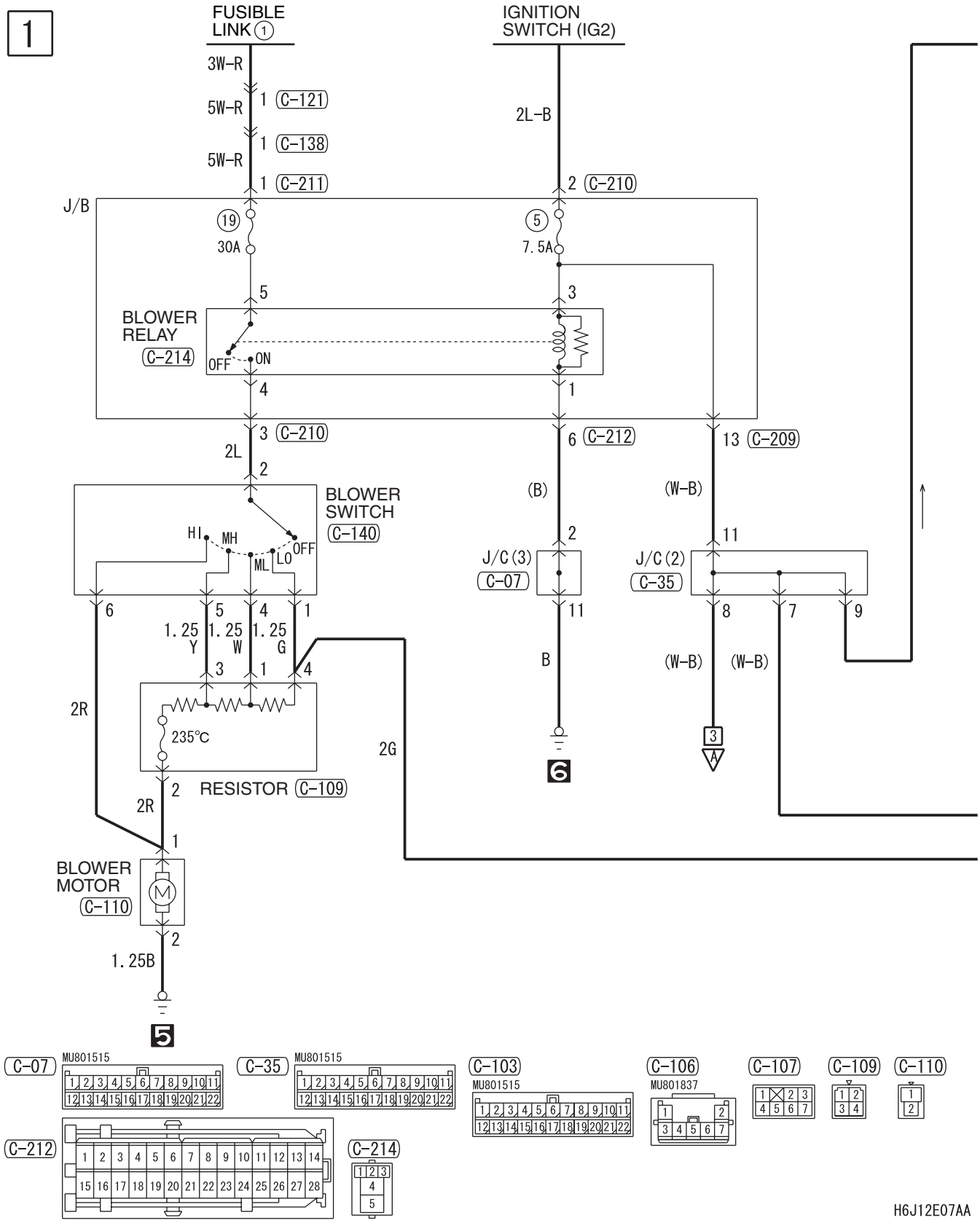

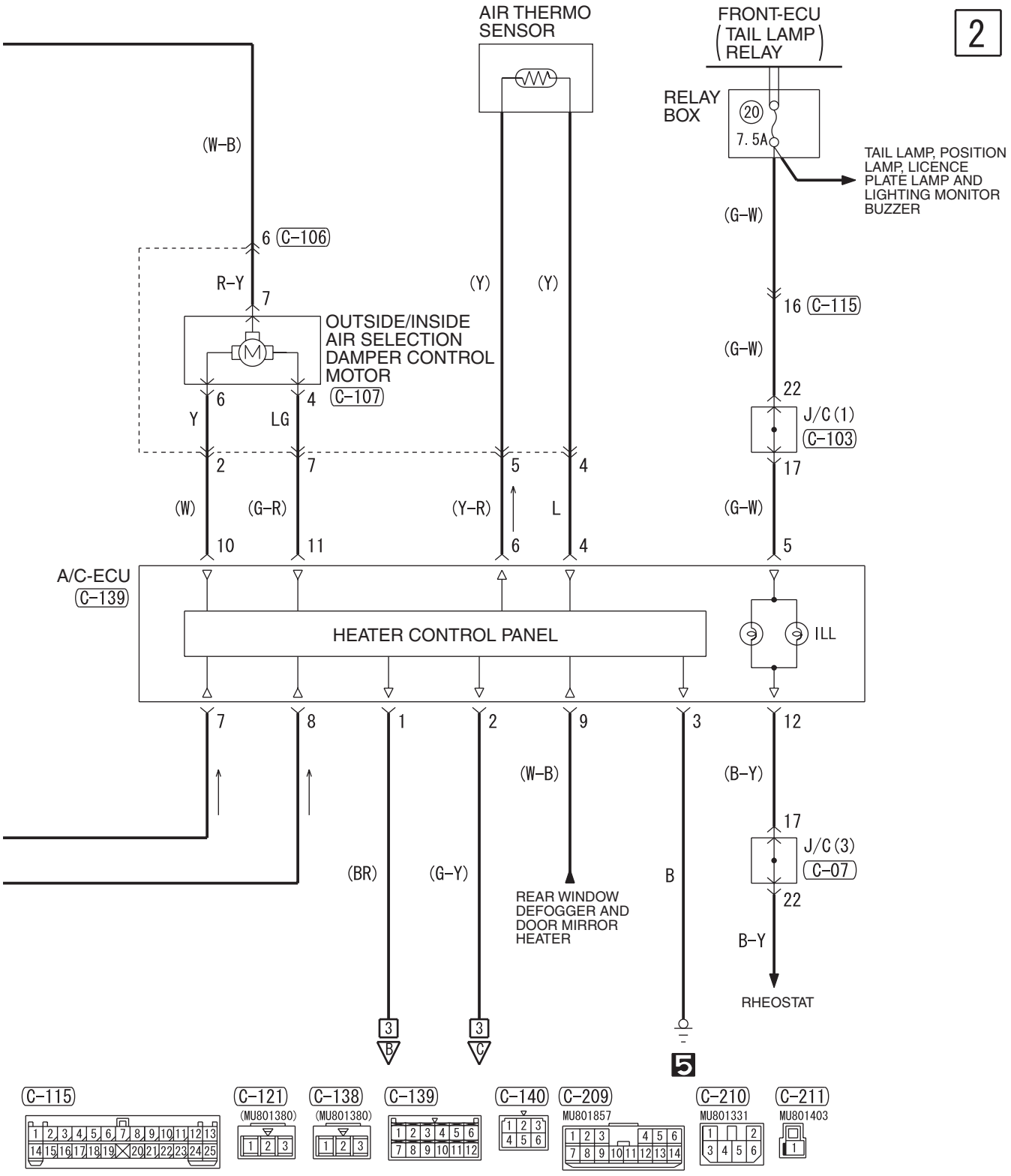

Wire colour code
B : Black LG : Light green G : Green L : Blue W : White Y : Yellow SB : Sky blue
BR : Brown O : Orange GR : Grey R : Red P : Pink V : Violet PU : Purple

H6J12E07AB

MANUAL AIR CONDITIONER <RHD> (CONTINUED)

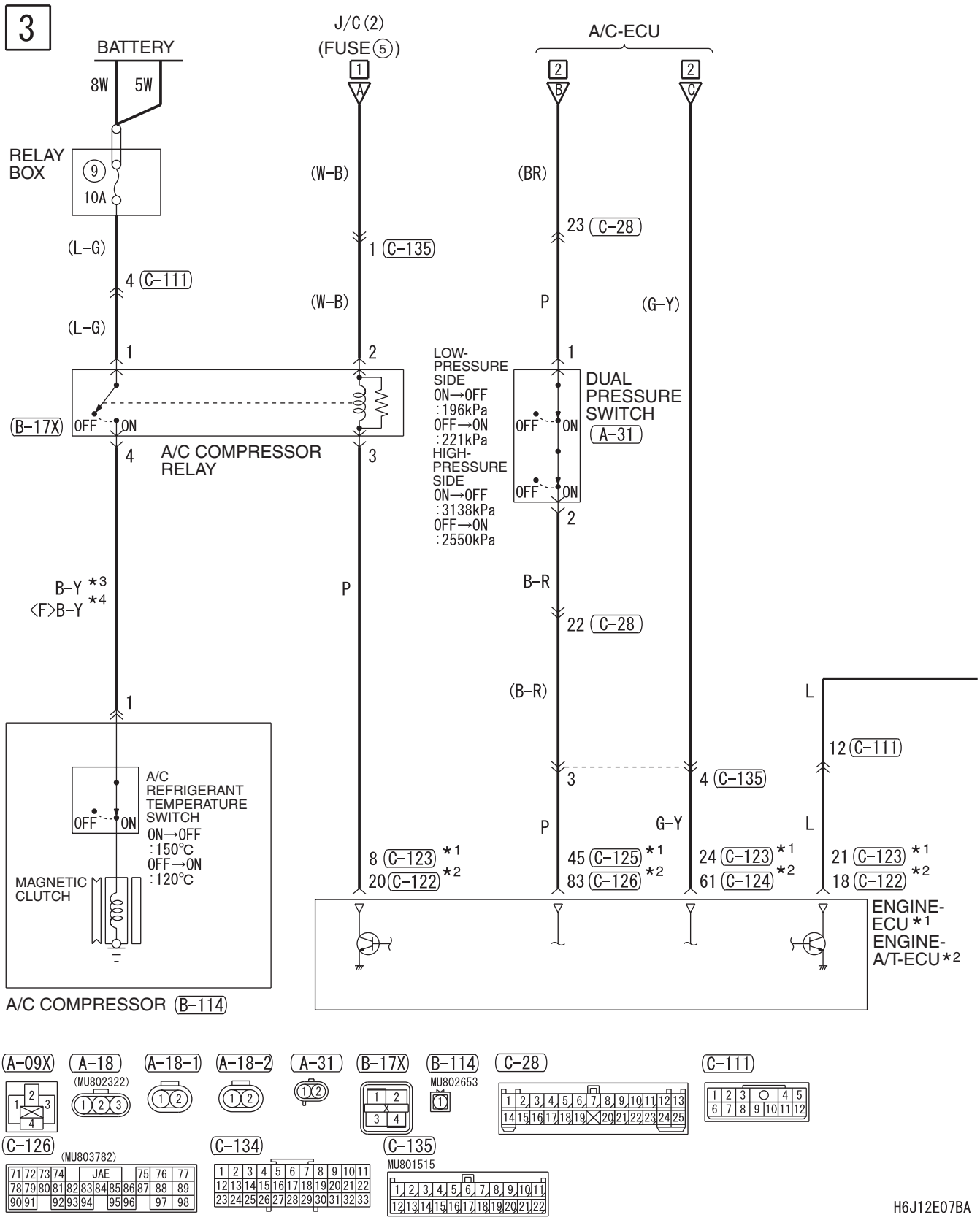

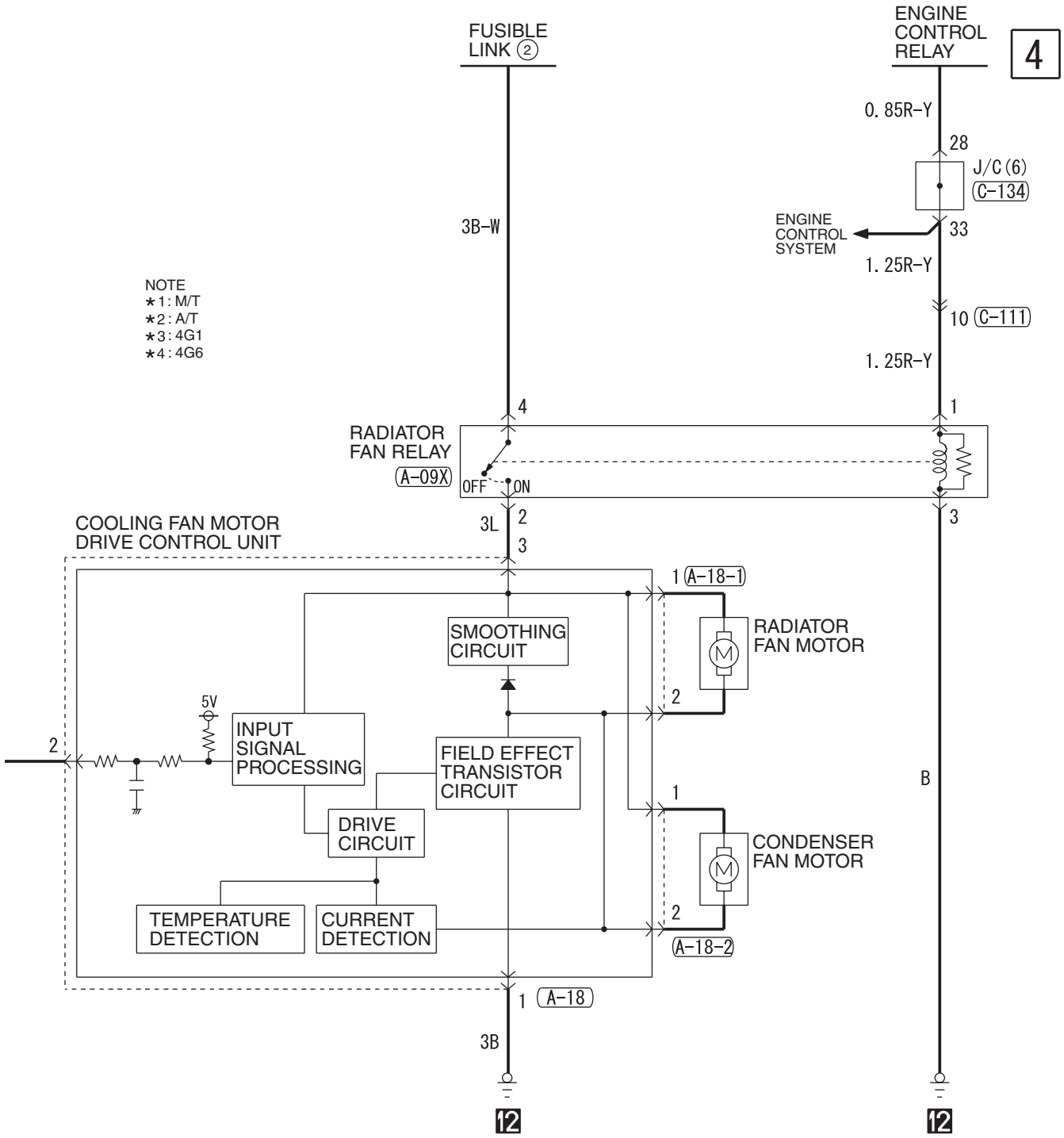

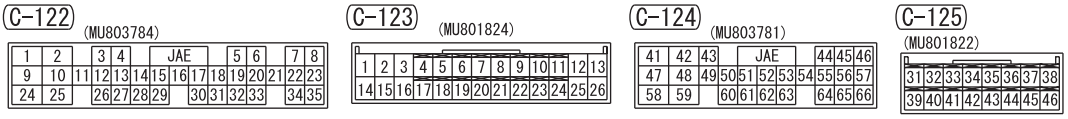

Wire colour code
B : Black LG : Light green G : Green L : Blue W : White Y : Yellow SB : Sky blue
BR : Brown O : Orange GR : Grey R : Red P : Pink V : Violet PU : Purple

H6J12E07BB

AUTOMATIC AIR CONDITIONER

AUTOMATIC AIR CONDITIONER <LHD>

M1901005600942

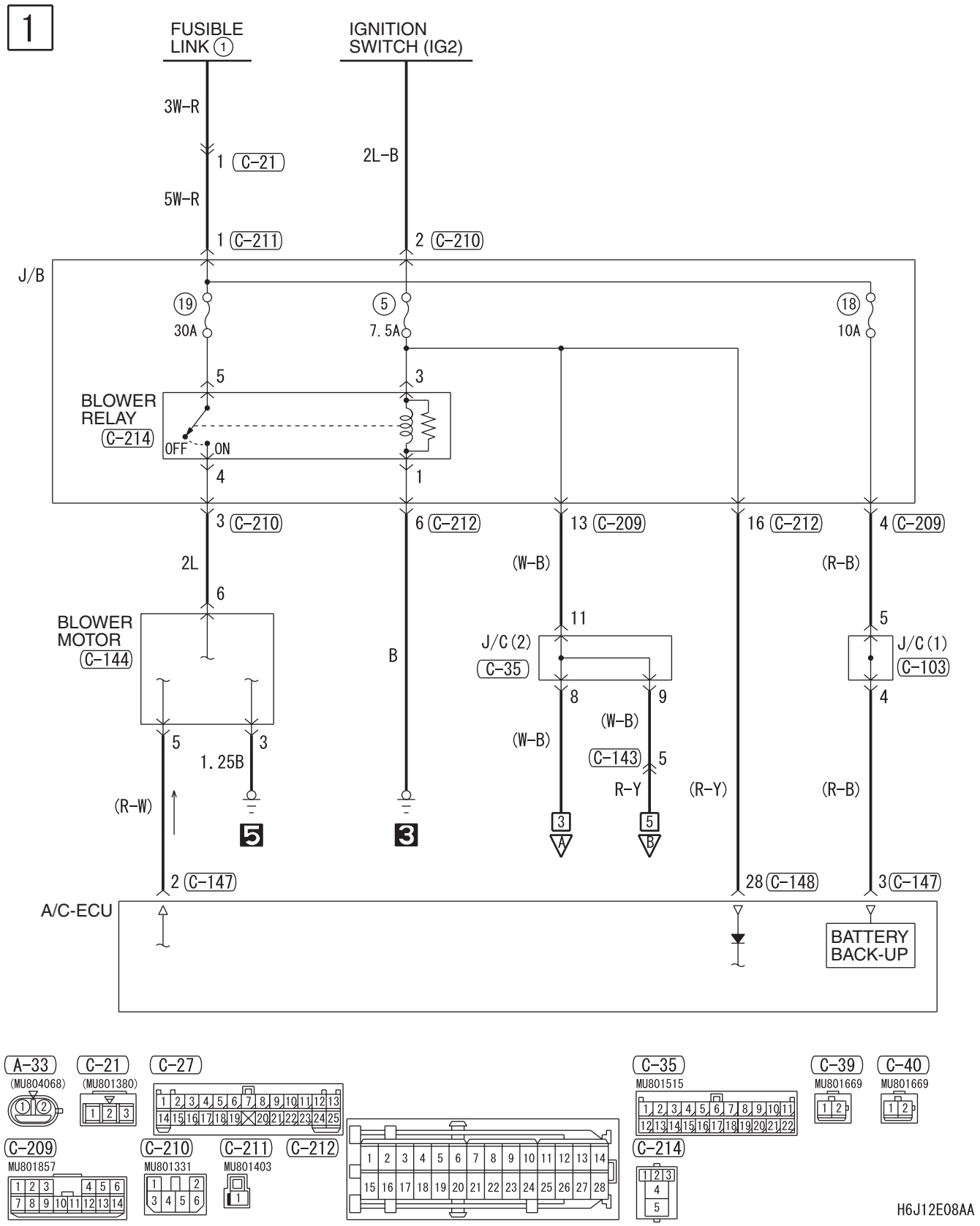

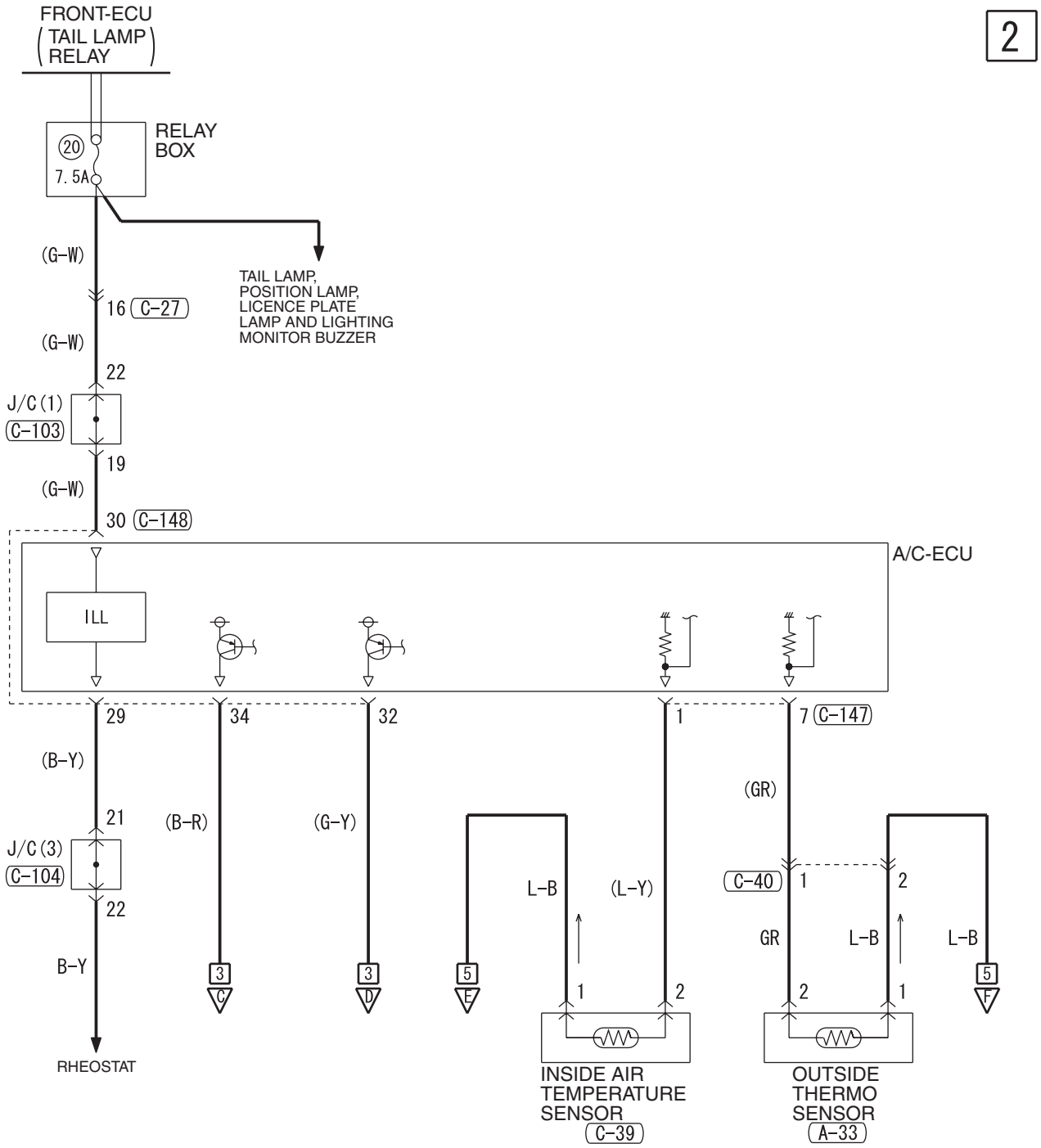

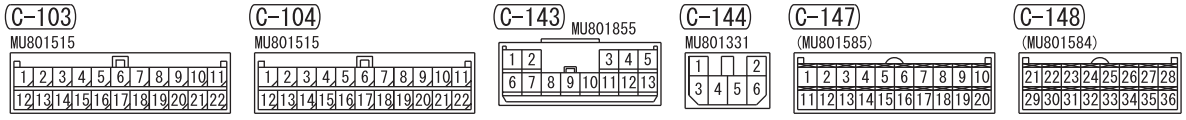

Wire colour code
B : Black LG : Light green G : Green L : Blue W : White Y : Yellow SB : Sky blue
BR : Brown O : Orange GR : Grey R : Red P : Pink V : Violet PU : Purple

H6J12E08AB

AUTOMATIC AIR CONDITIONER <LHD> (CONTINUED)

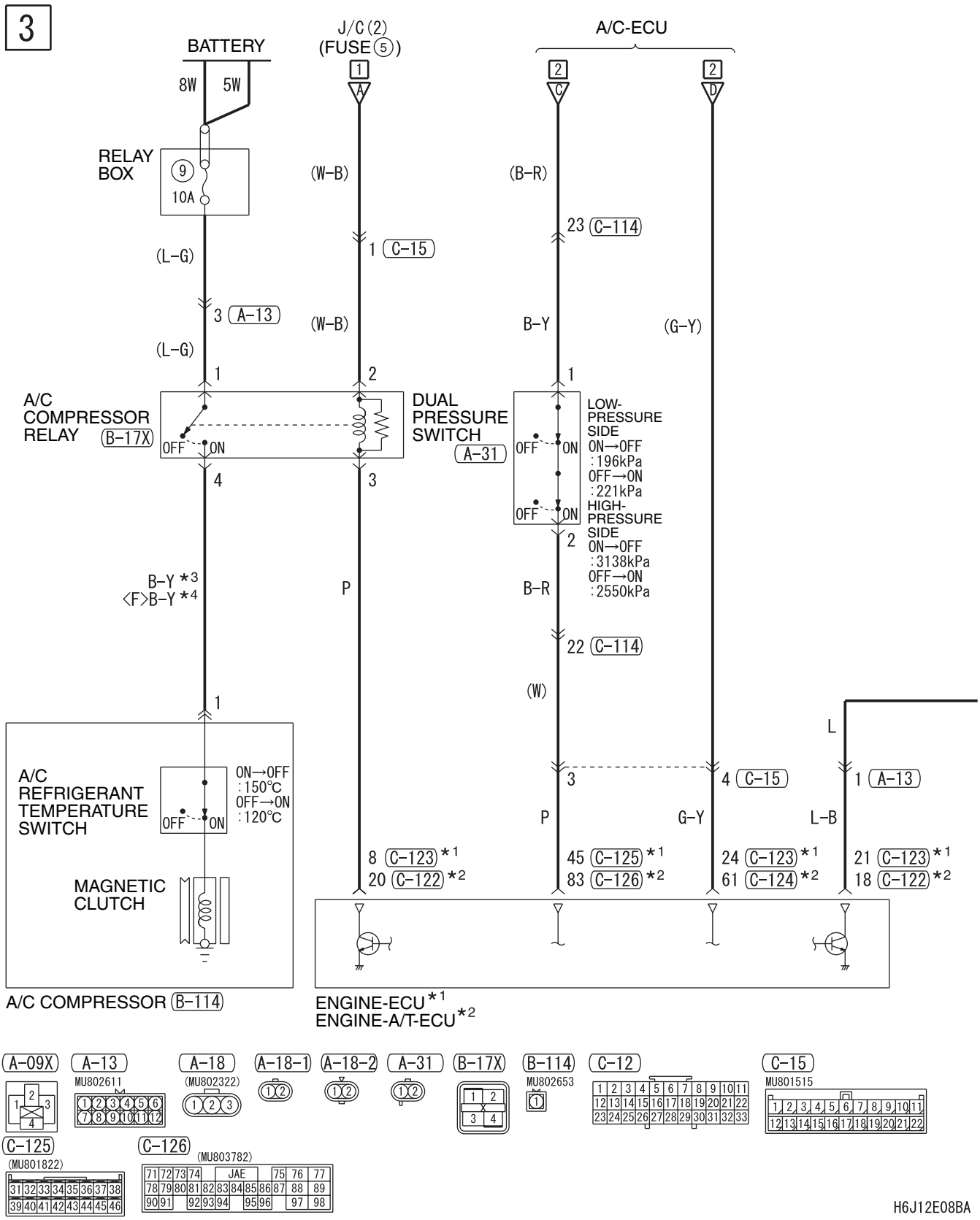

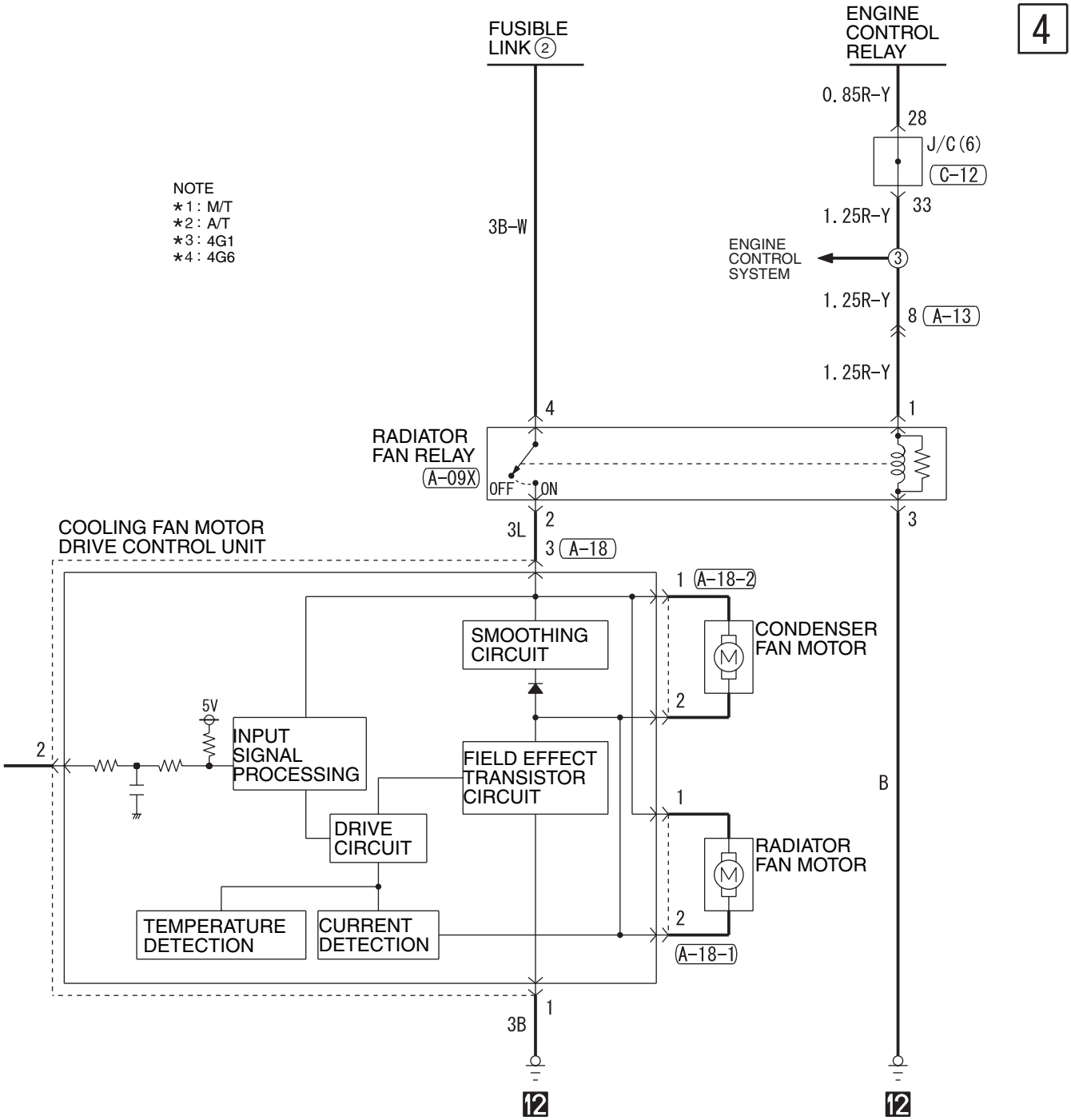

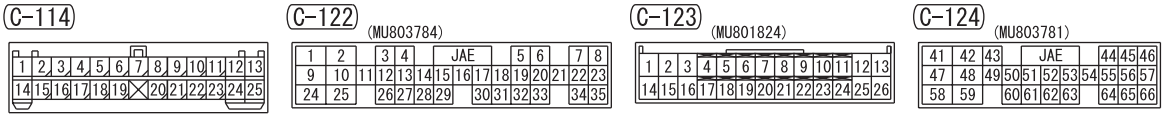

Wire colour code
B : Black LG : Light green G : Green L : Blue W : White Y : Yellow SB : Sky blue
BR : Brown O : Orange GR : Grey R : Red P : Pink V : Violet PU : Purple

H6J12E08BB

AUTOMATIC AIR CONDITIONER <LHD> (CONTINUED)

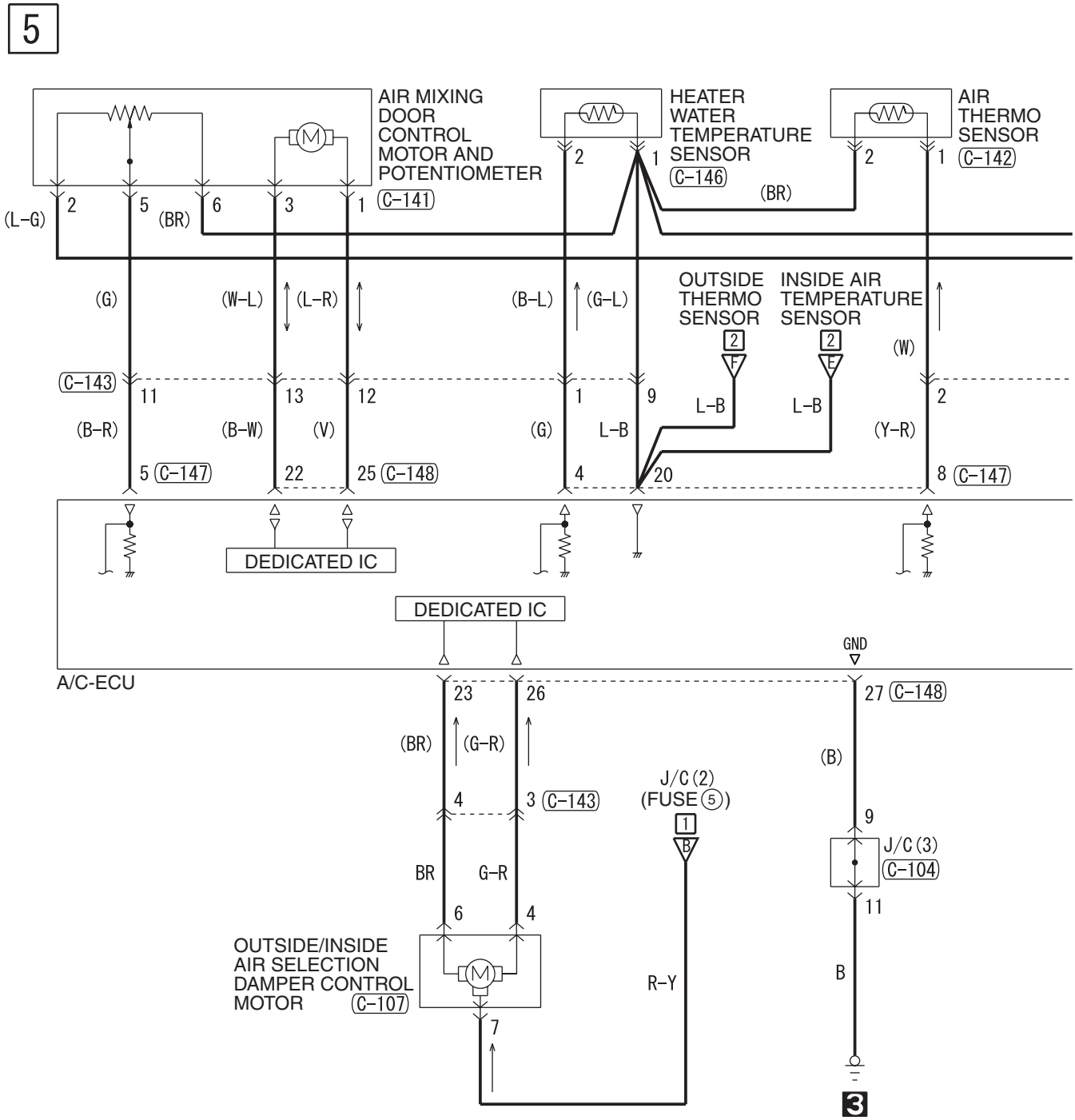

H6J12E08CA

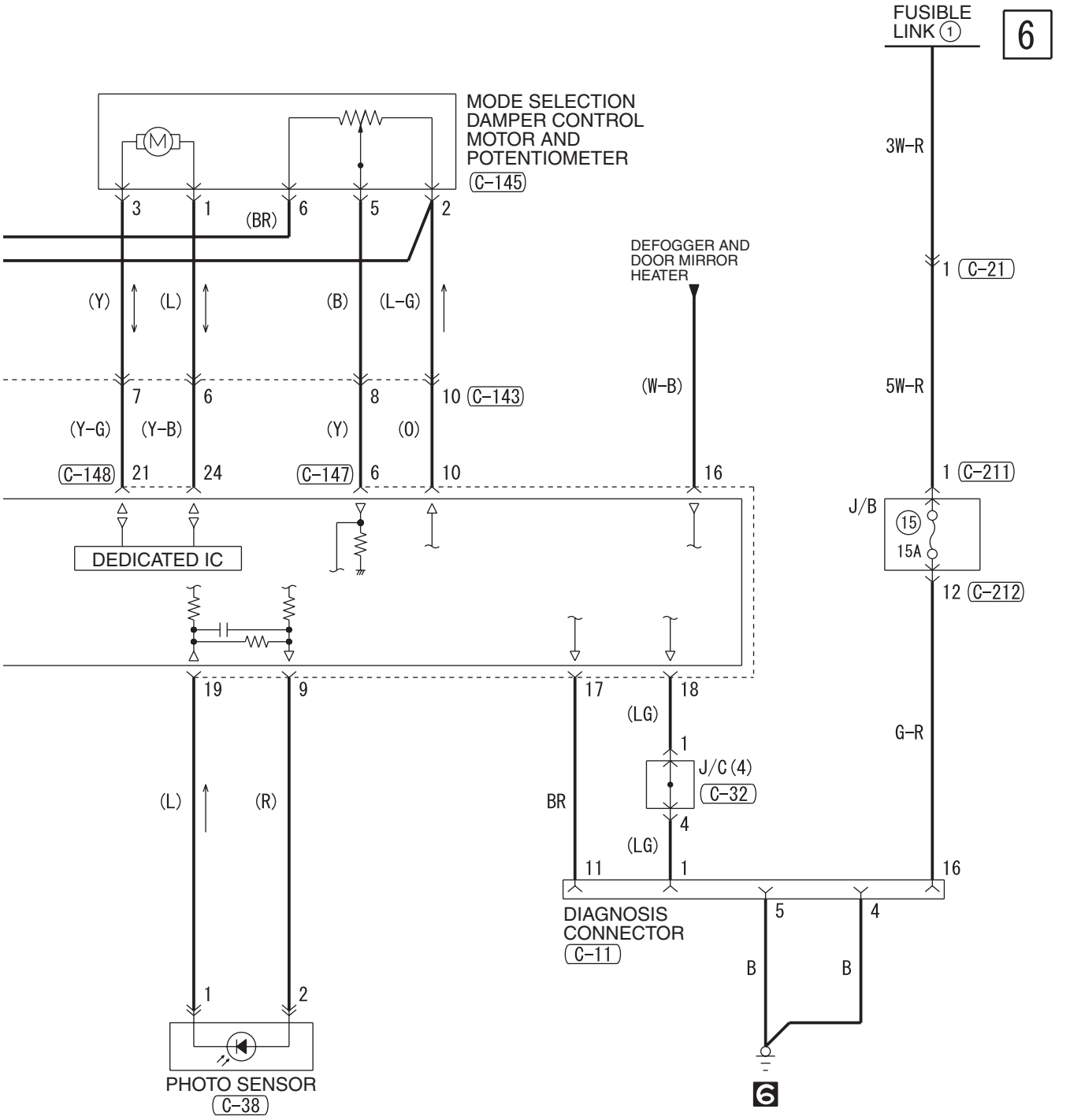

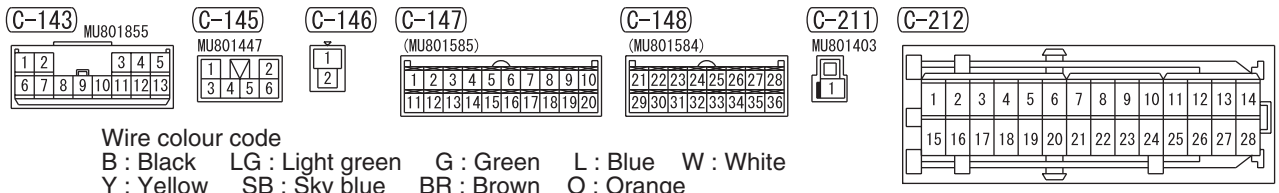

Wire colour code
B : Black LG : Light green G : Green L : Blue W : White
Y : Yellow SB : Sky blue BR : Brown O : Orange
GR : Grey R : Red P : Pink V : Violet PU : Purple

H6J12E08CB

AUTOMATIC AIR CONDITIONER <RHD>

M1901005600953

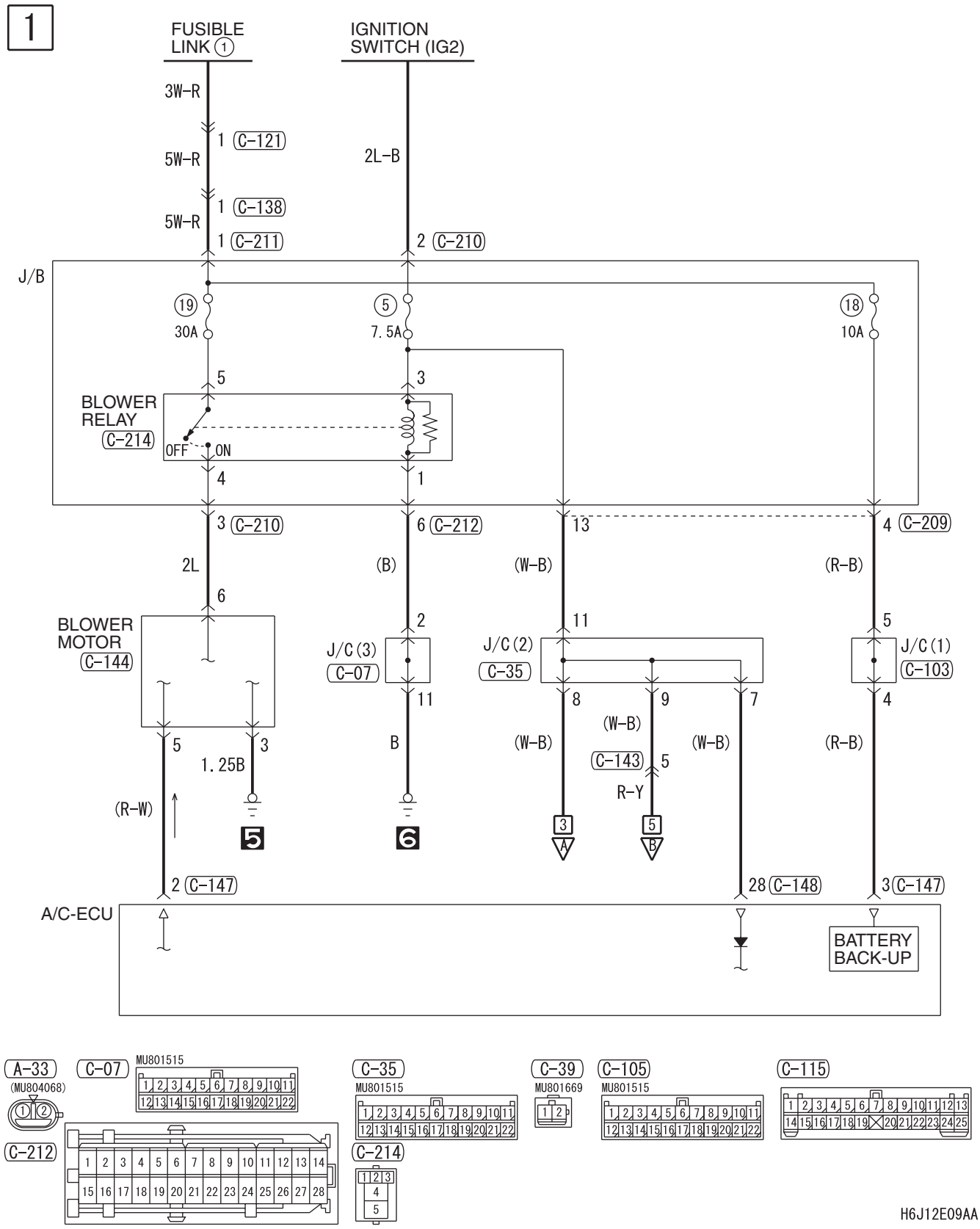

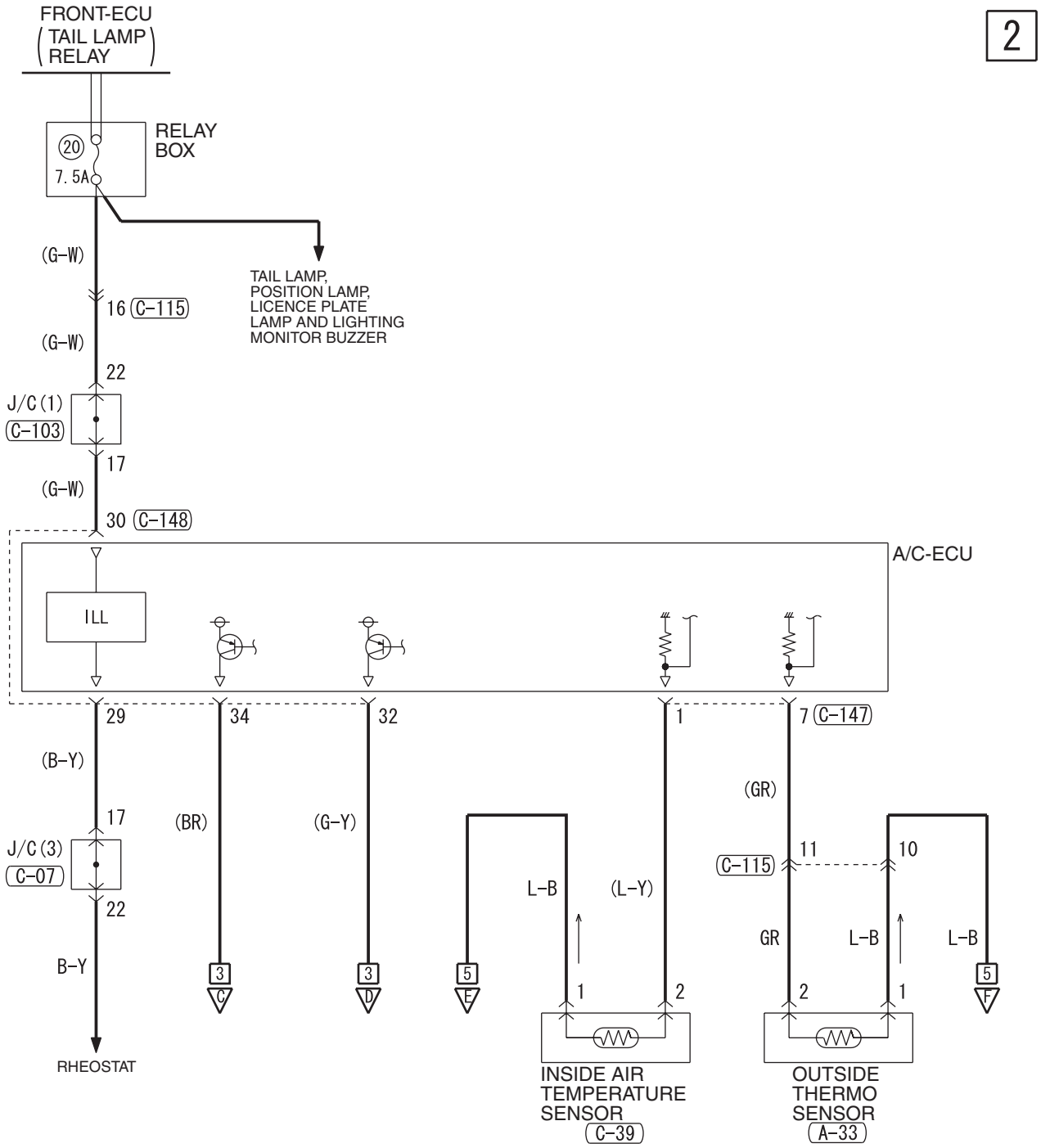

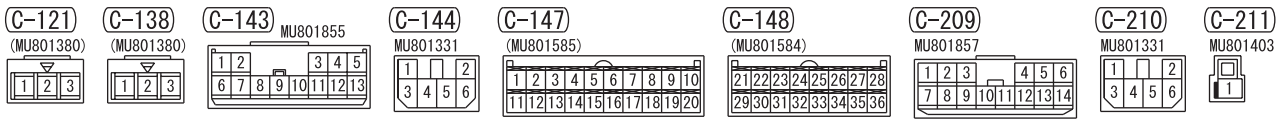

Wire colour code
B : Black LG : Light green G : Green L : Blue W : White Y : Yellow SB : Sky blue
BR : Brown O : Orange GR : Grey R : Red P : Pink V : Violet PU : Purple

H6J12E09AB

AUTOMATIC AIR CONDITIONER <RHD> (CONTINUED)

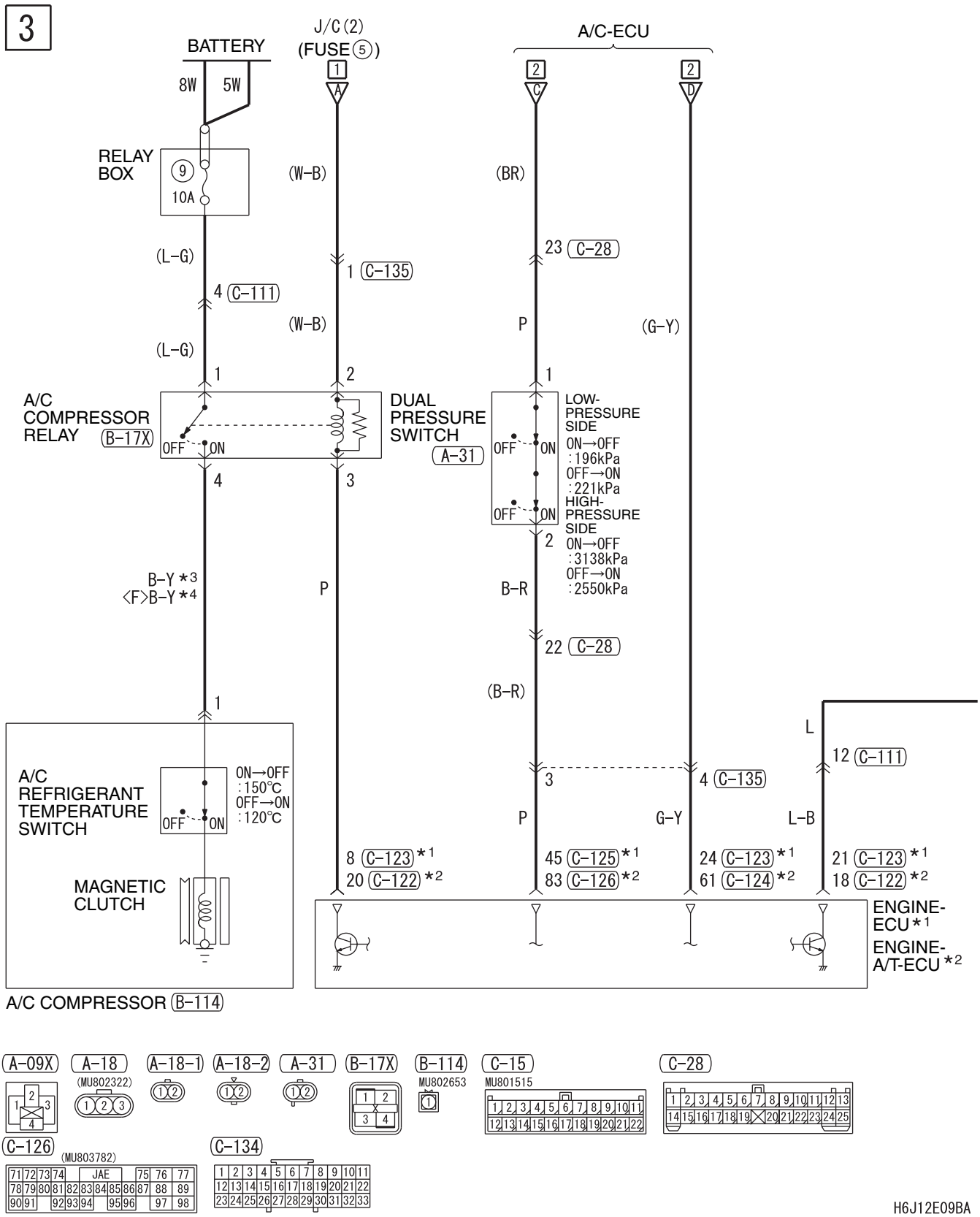

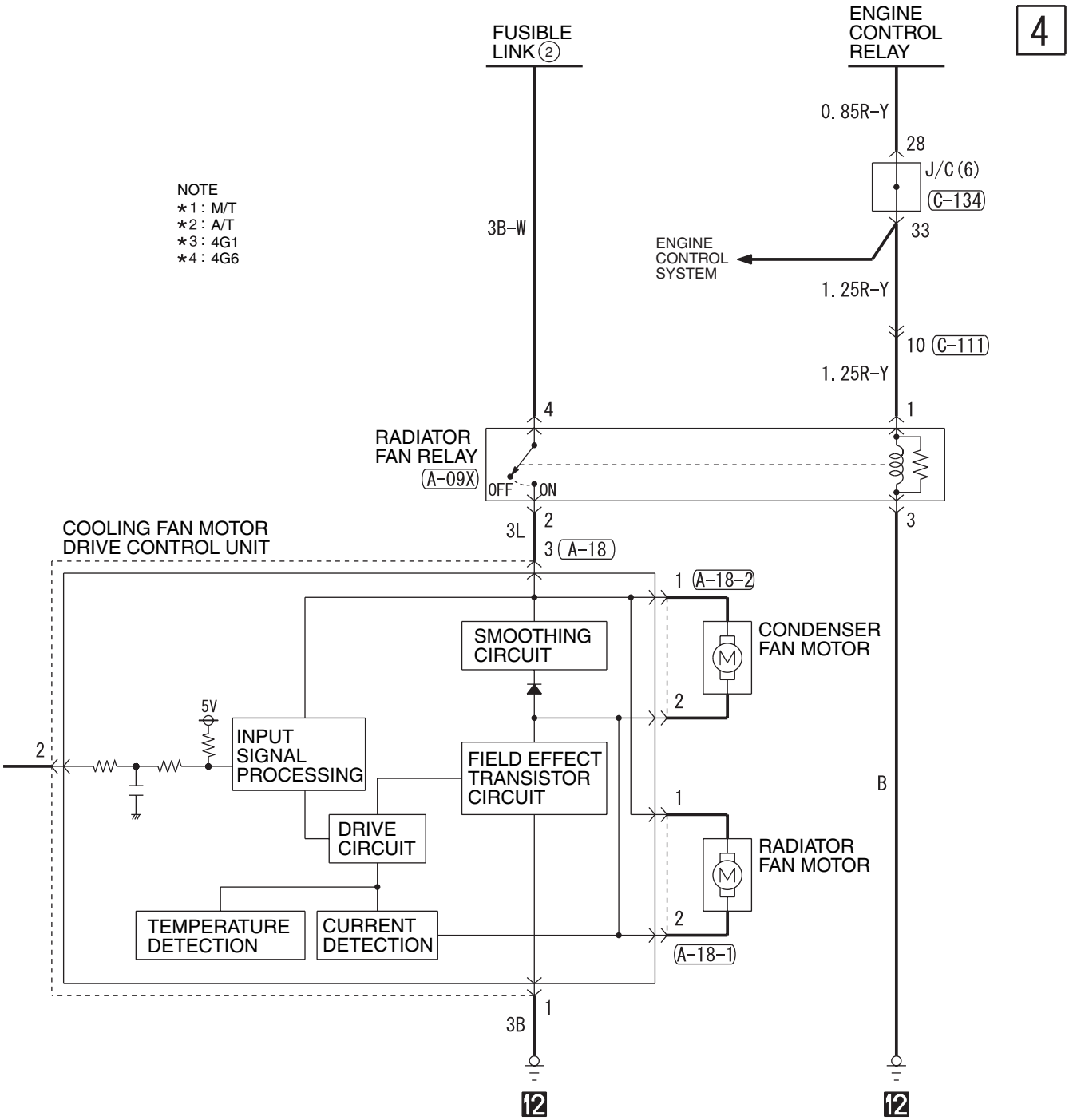

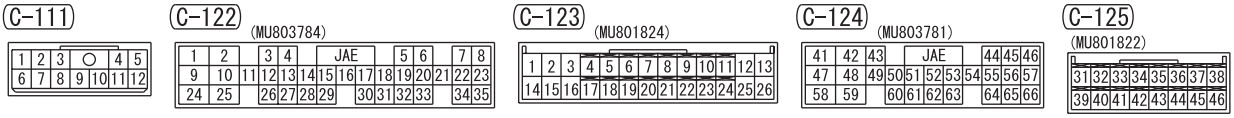

Wire colour code
B : Black LG : Light green G : Green L : Blue W : White Y : Yellow SB : Sky blue
BR : Brown O : Orange GR : Grey R : Red P : Pink V : Violet PU : Purple

H6J12E09BB

AUTOMATIC AIR CONDITIONER <RHD> (CONTINUED)

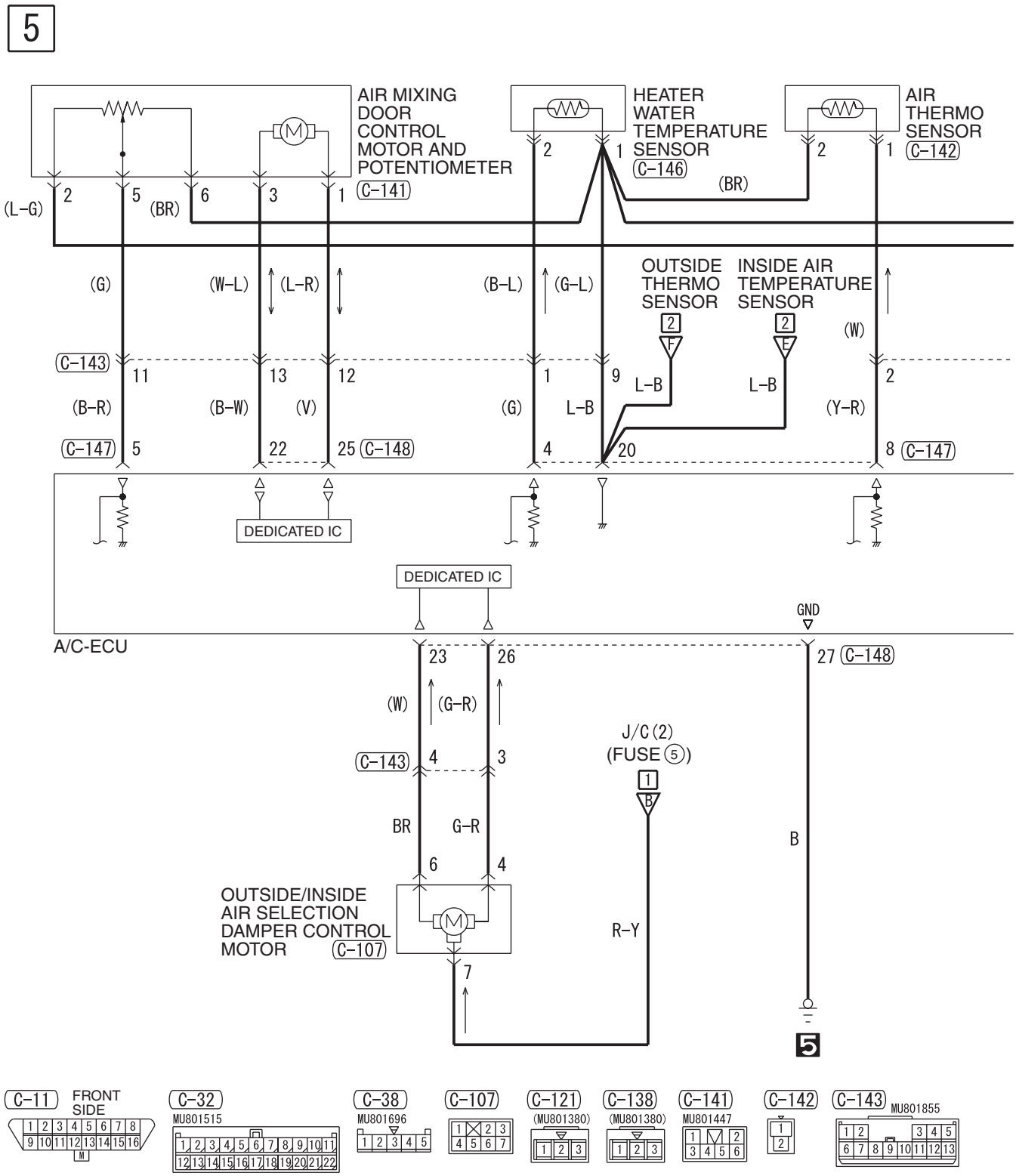

H6J12E09CA

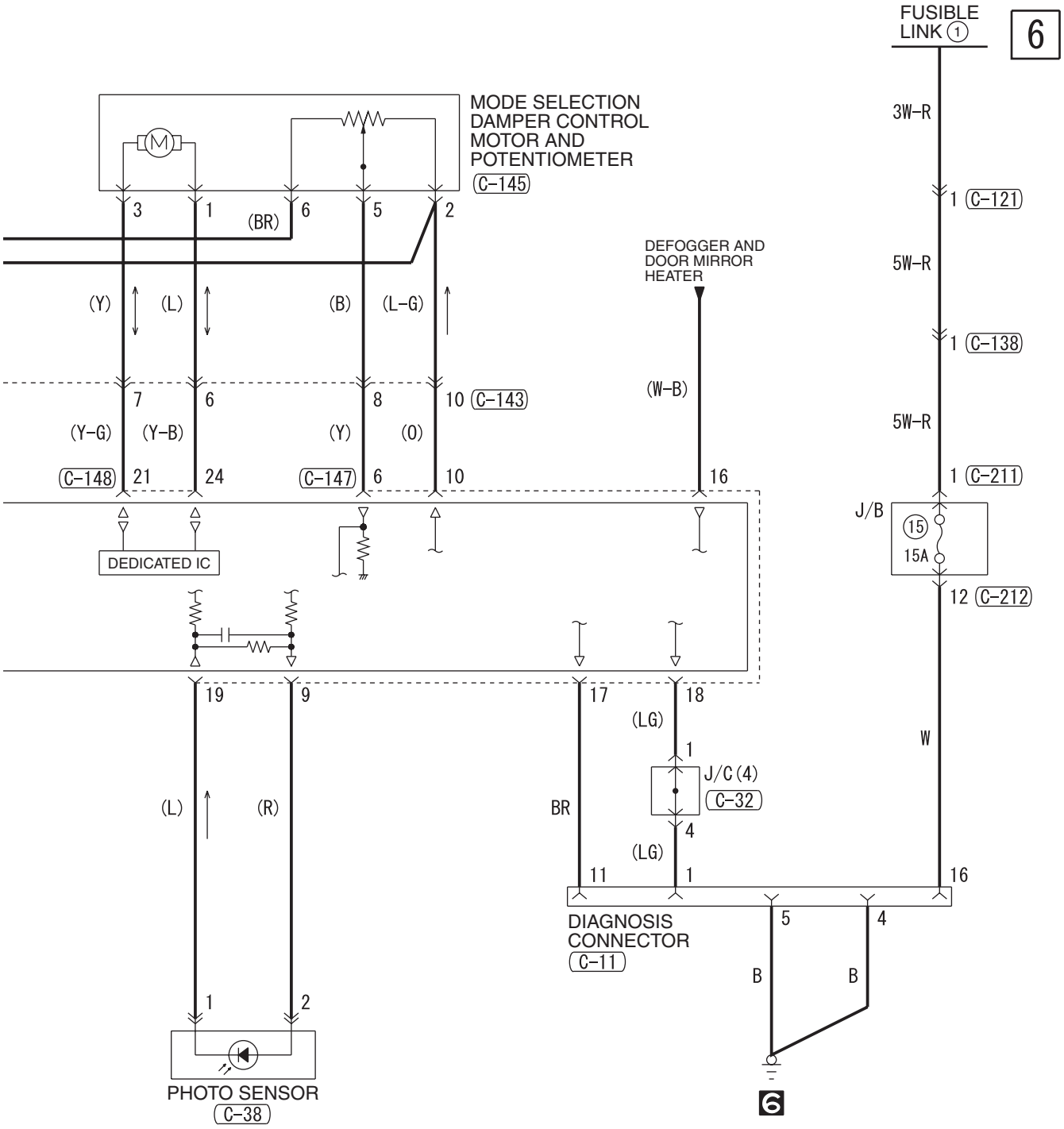

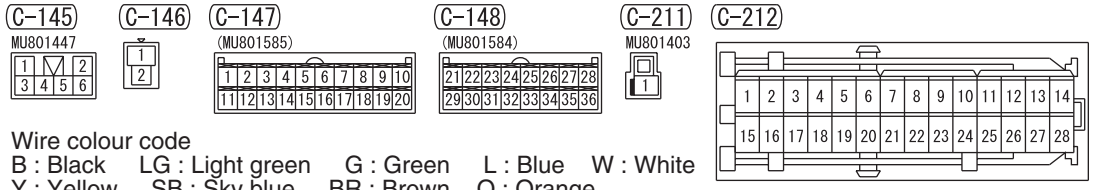

Wire colour code
B : Black LG : Light green G : Green L : Blue W : White
Y : Yellow SB : Sky blue BR : Brown O : Orange
GR : Grey R : Red P : Pink V : Violet PU : Purple

H6J12E09CB

WINDSHIELD WIPER AND WASHER

WINDSHIELD WIPER AND WASHER <LHD>

M1901006102065

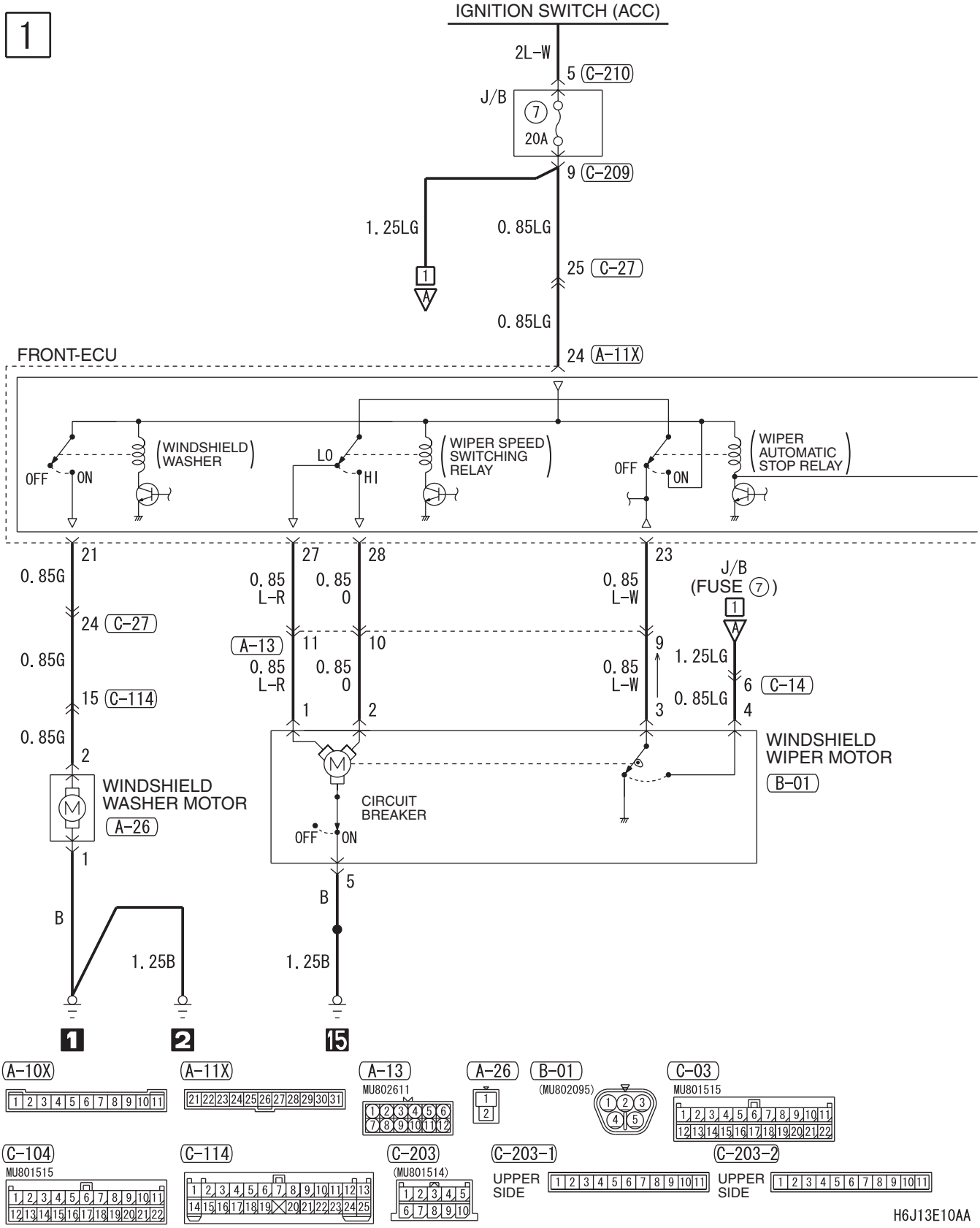

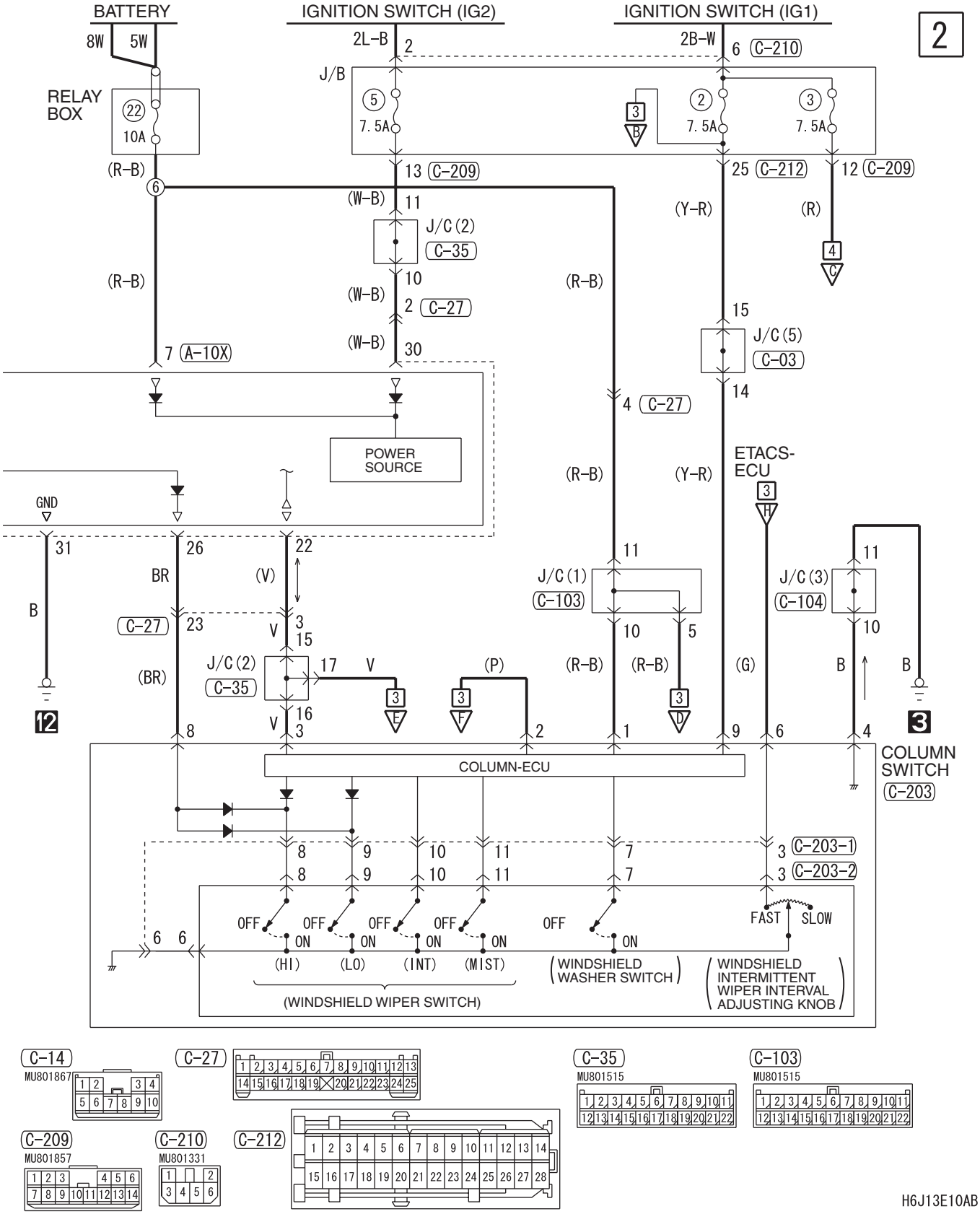
BATTERY
IGNITION SWITCH (IG2)
IGNITION SWITCH (IG1)
2
8W
5W
2L-B
2B-W
C-210
J/B
RELAY BOX
22
10A
5
7.5A
2
7.5A
3
7.5A
(R-B)
13 C-209
25 C-212
12 C-209
(W-B)
11
(Y-R)
(R)
J/C (2)
C-35
10
(W-B)
2 C-27
(R-B)
15
J/C (5)
C-03
7 A-10X
(W-B)
30
4 C-27
14
POWER SOURCE
ETACS-ECU
GND
31
26
22
11
11
B
BR
(V)
J/C (1)
C-103
J/C (3)
C-104
C-27
23
3
15
10
5
10
V
J/C (2)
C-35
17
V
(P)
(R-B)
(R-B)
(G)
B
B
(BR)
16
V
3
12
8
2
1
9
6
4
3
COLUMN-ECU
COLUMN SWITCH
C-203
8
9
10
11
7
3 C-203-1
8
9
10
11
7
3 C-203-2
OFF
OFF
OFF
OFF
OFF
FAST
SLOW
6
6
ON
ON
ON
ON
ON
(HI)
(LO)
(INT)
(MIST)
(WINDSHIELD WIPER SWITCH)
(WINDSHIELD WASHER SWITCH)
(WINDSHIELD INTERMITTENT WIPER INTERVAL ADJUSTING KNOB)
C-14
MU801867
C-27
C-35
MU801515
C-103
MU801515
C-209
MU801857
C-210
MU801331
C-212
H6J13E10AB

WINDSHIELD WIPER AND WASHER <LHD> (CONTINUED)

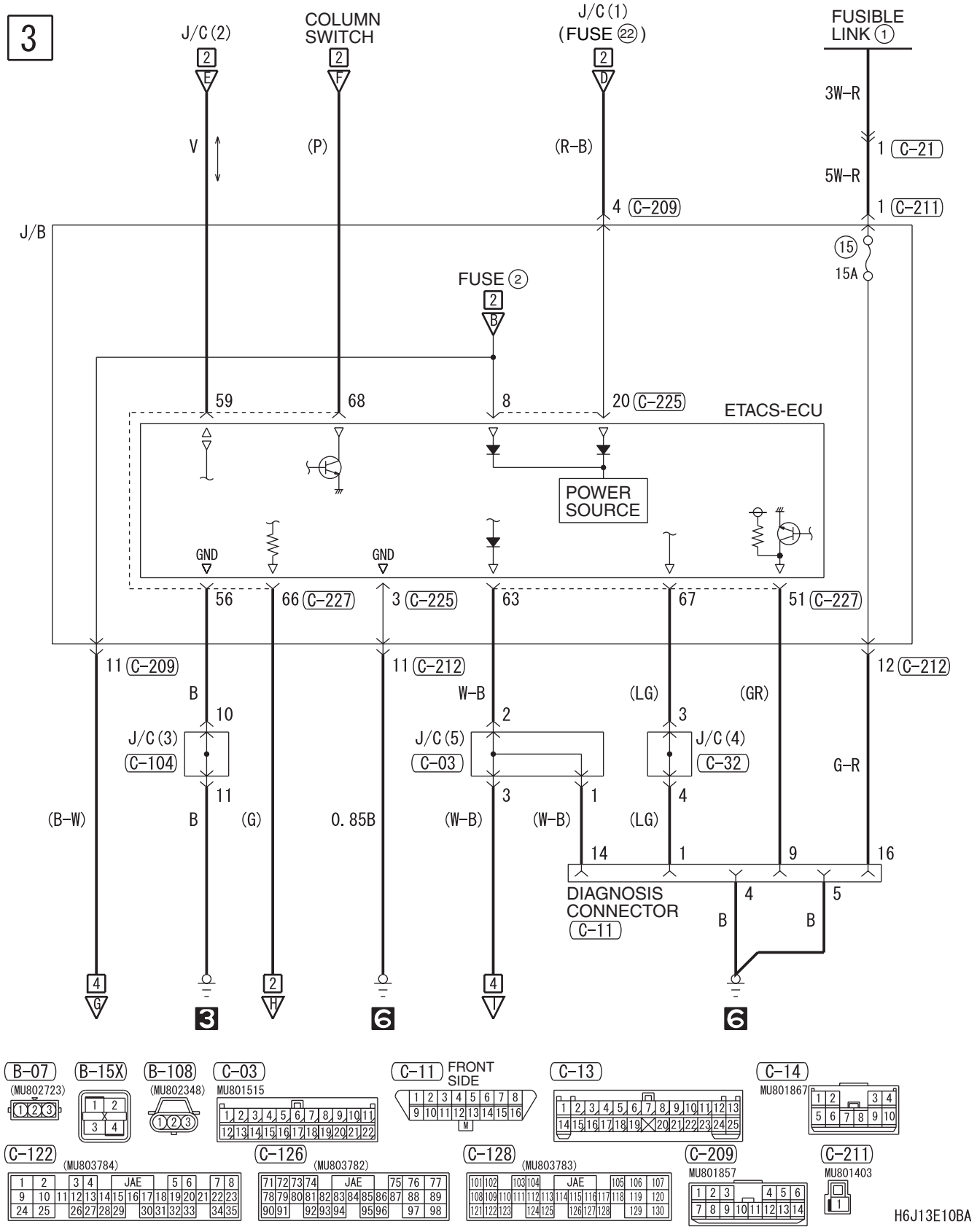

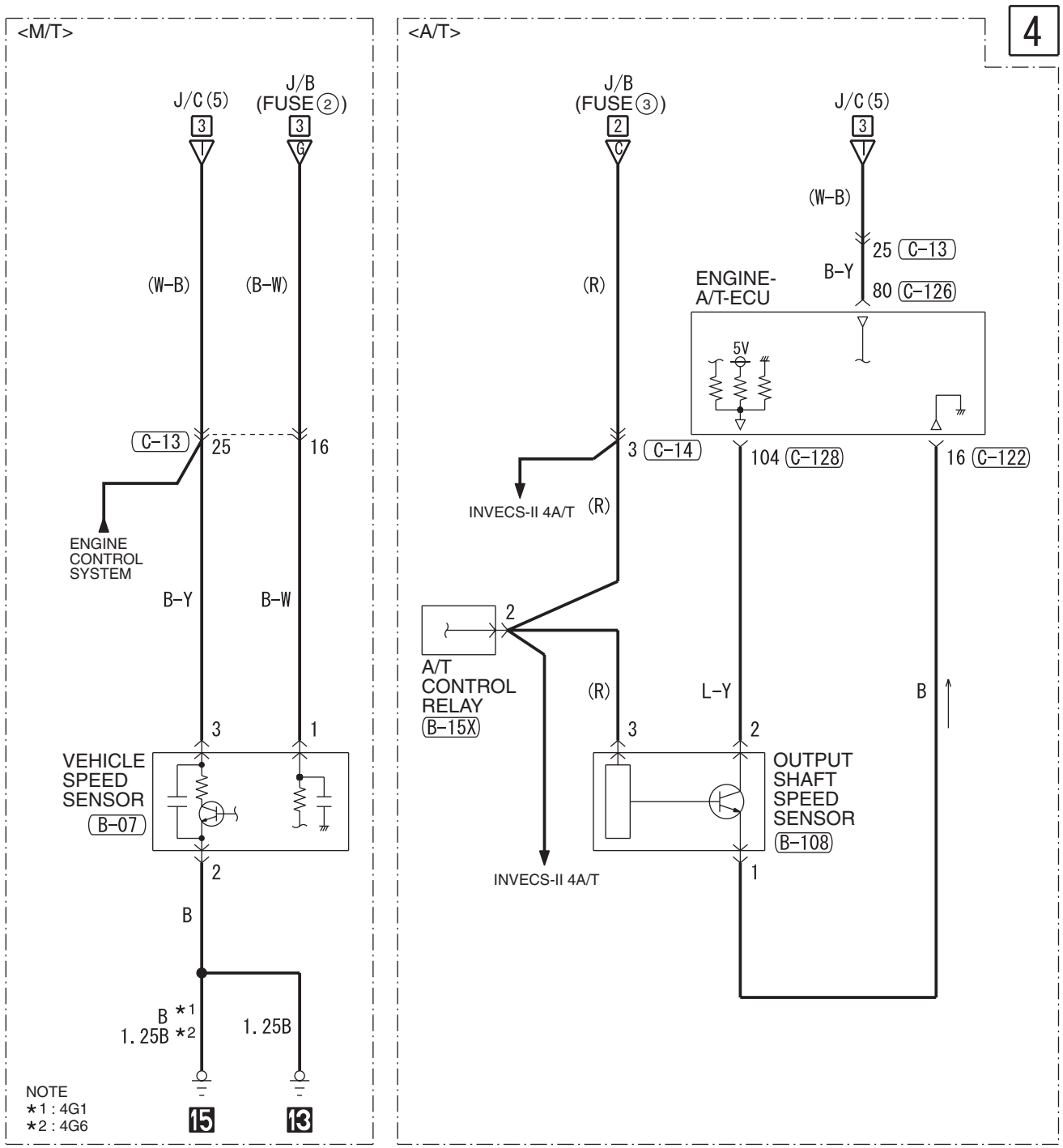
<M/T>
<A/T>
4
J/C (5)
J/B (FUSE ②)
J/B (FUSE ③)
J/C (5)
(W-B)
(B-W)
(R)
(W-B)
25 C-13
B-Y
80 C-126
ENGINE-A/T-ECU
5V
C-13
25
16
3 C-14
104 C-128
16 C-122
INVECS-II 4A/T
(R)
ENGINE CONTROL SYSTEM
B-Y
B-W
2
A/T CONTROL RELAY
B-15X
(R)
L-Y
B
3
1
3
2
VEHICLE SPEED SENSOR
B-07
OUTPUT SHAFT SPEED SENSOR
B-108
2
1
INVECS-II 4A/T
B
B *1
1.25B *2
1.25B
NOTE
*1 : 4G1
*2 : 4G6
15
13
C-21
(MU801380)
C-32
MU801515
C-104
MU801515
C-212
C-225
J/B SIDE
C-227
(MU803766)
H6J13E10BB

WINDSHIELD WIPER AND WASHER <RHD>

M1901006102076

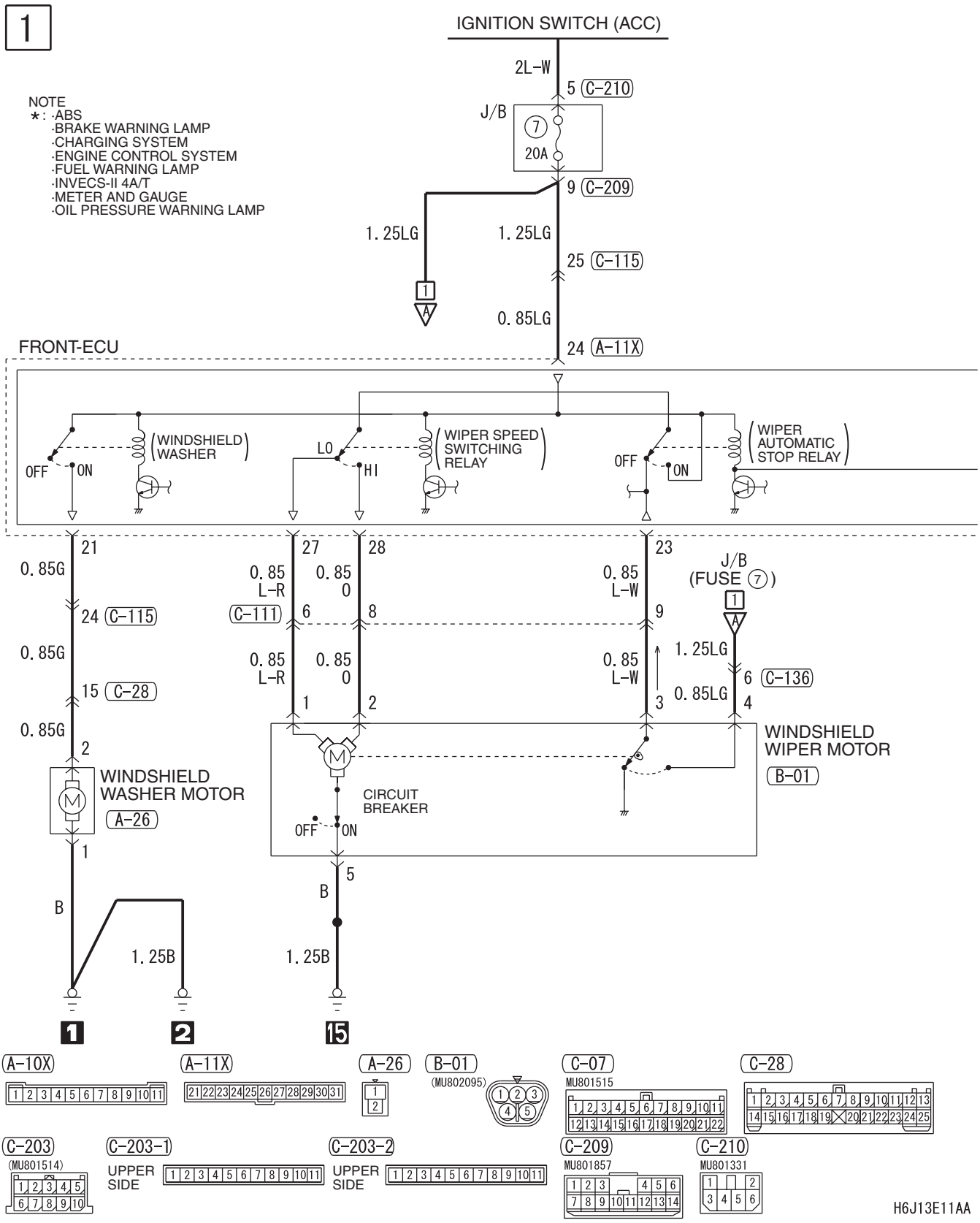

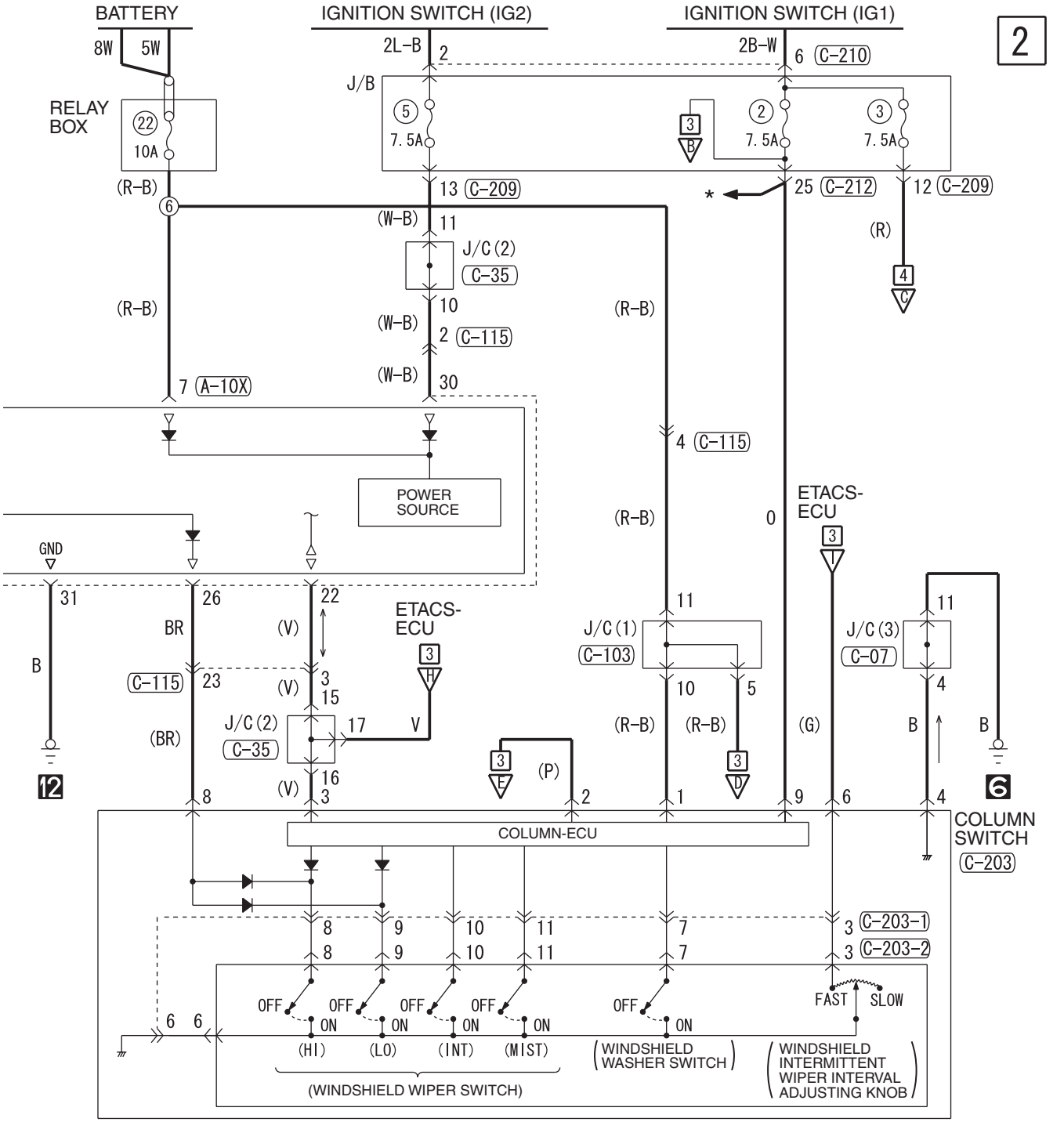
BATTERY
IGNITION SWITCH (IG2)
IGNITION SWITCH (IG1)
2
8W
5W
RELAY BOX
22
10A
2L-B
2
2B-W
6
C-210
J/B
5
7.5A
2
7.5A
3
7.5A
(R-B)
6
13
C-209
25
C-212
12
C-209
(W-B)
11
(R)
J/C (2)
C-35
10
(R-B)
(W-B)
2
C-115
(W-B)
30
7
A-10X
4
C-115
POWER SOURCE
ETACS-ECU
0
GND
31
26
22
11
11
B
BR
(V)
ETACS-ECU
J/C (1)
C-103
J/C (3)
C-07
C-115
23
(V)
3
15
10
5
4
J/C (2)
C-35
17
V
(R-B)
(R-B)
(G)
B
B
(BR)
(V)
16
3
(P)
12
8
2
1
9
6
4
6
COLUMN-ECU
COLUMN SWITCH
C-203
8
9
10
11
7
3
C-203-1
8
9
10
11
7
3
C-203-2
OFF
ON
(HI)
(LO)
(INT)
(MIST)
FAST
SLOW
6
6
(WINDSHIELD WIPER SWITCH)
(WINDSHIELD WASHER SWITCH)
(WINDSHIELD INTERMITTENT WIPER INTERVAL ADJUSTING KNOB)
C-35
MU801515
C-103
MU801515
C-111
C-115
C-136
MU801867
C-212
Wire colour code
B : Black LG : Light green G : Green L : Blue W : White
Y : Yellow SB : Sky blue BR : Brown O : Orange
GR : Grey R : Red P : Pink V : Violet PU : Purple
H6J13E11AB

WINDSHIELD WIPER AND WASHER <RHD> (CONTINUED)

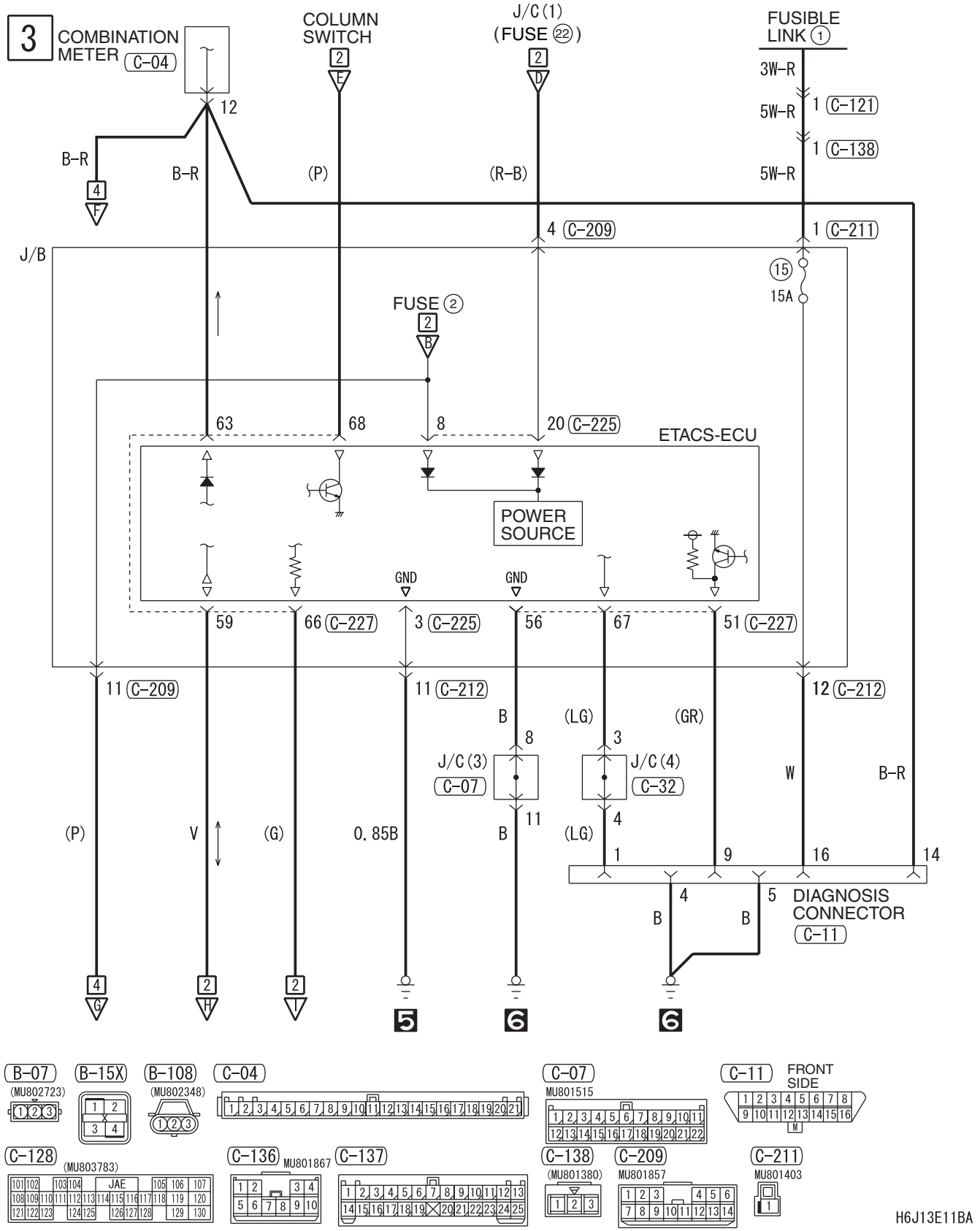

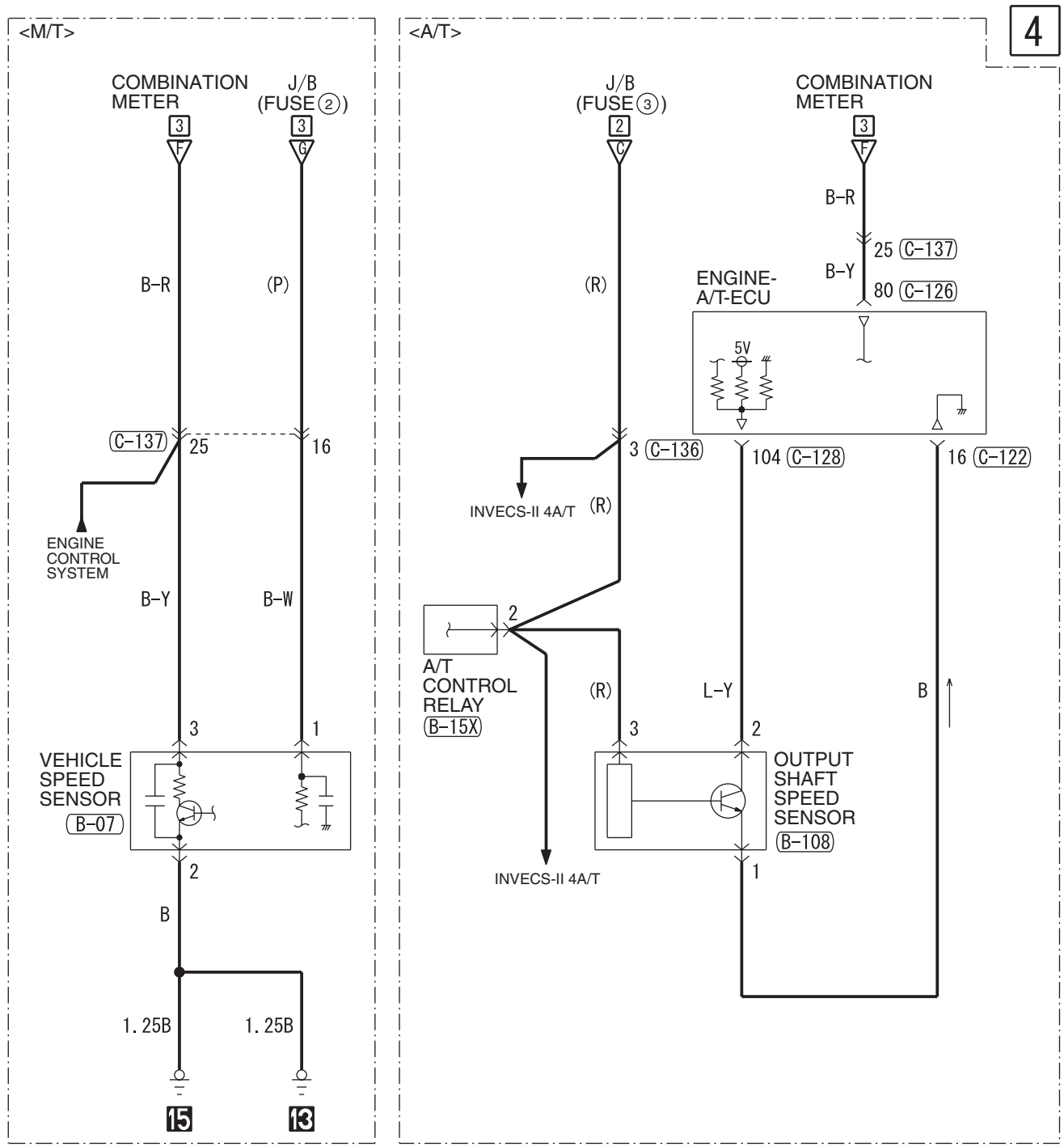
<M/T>
<A/T>
4
COMBINATION METER
J/B (FUSE ②)
J/B (FUSE ③)
COMBINATION METER
3 F
3 G
2 C
3 F
B-R
(P)
(R)
B-R
25 C-137
B-Y
80 C-126
ENGINE-A/T-ECU
5V
C-137 25
16
3 C-136
104 C-128
16 C-122
INVECS-II 4A/T
(R)
ENGINE CONTROL SYSTEM
B-Y
B-W
2
A/T CONTROL RELAY B-15X
(R)
L-Y
B
3
1
3
2
VEHICLE SPEED SENSOR B-07
OUTPUT SHAFT SPEED SENSOR B-108
2
1
INVECS-II 4A/T
B
1.25B
1.25B
15
13

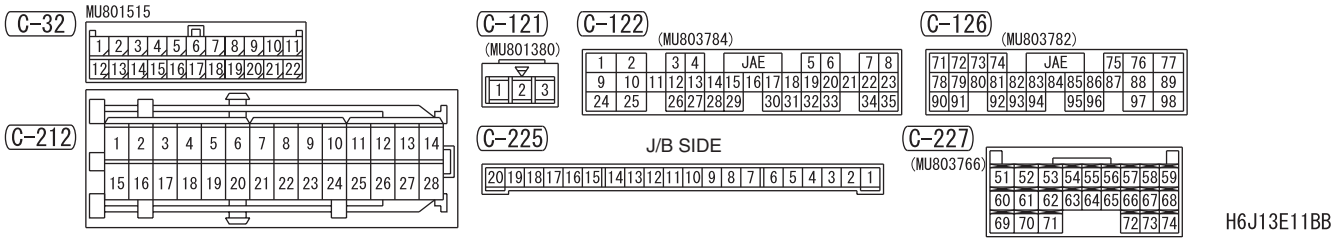
C-32
MU801515
C-212
C-121
(MU801380)
C-122
(MU803784)
JAE
C-126
(MU803782)
JAE
C-225
J/B SIDE
C-227
(MU803766)
H6J13E11BB

REAR WIPER AND WASHER

REAR WIPER AND WASHER <LHD>

M1901006201649

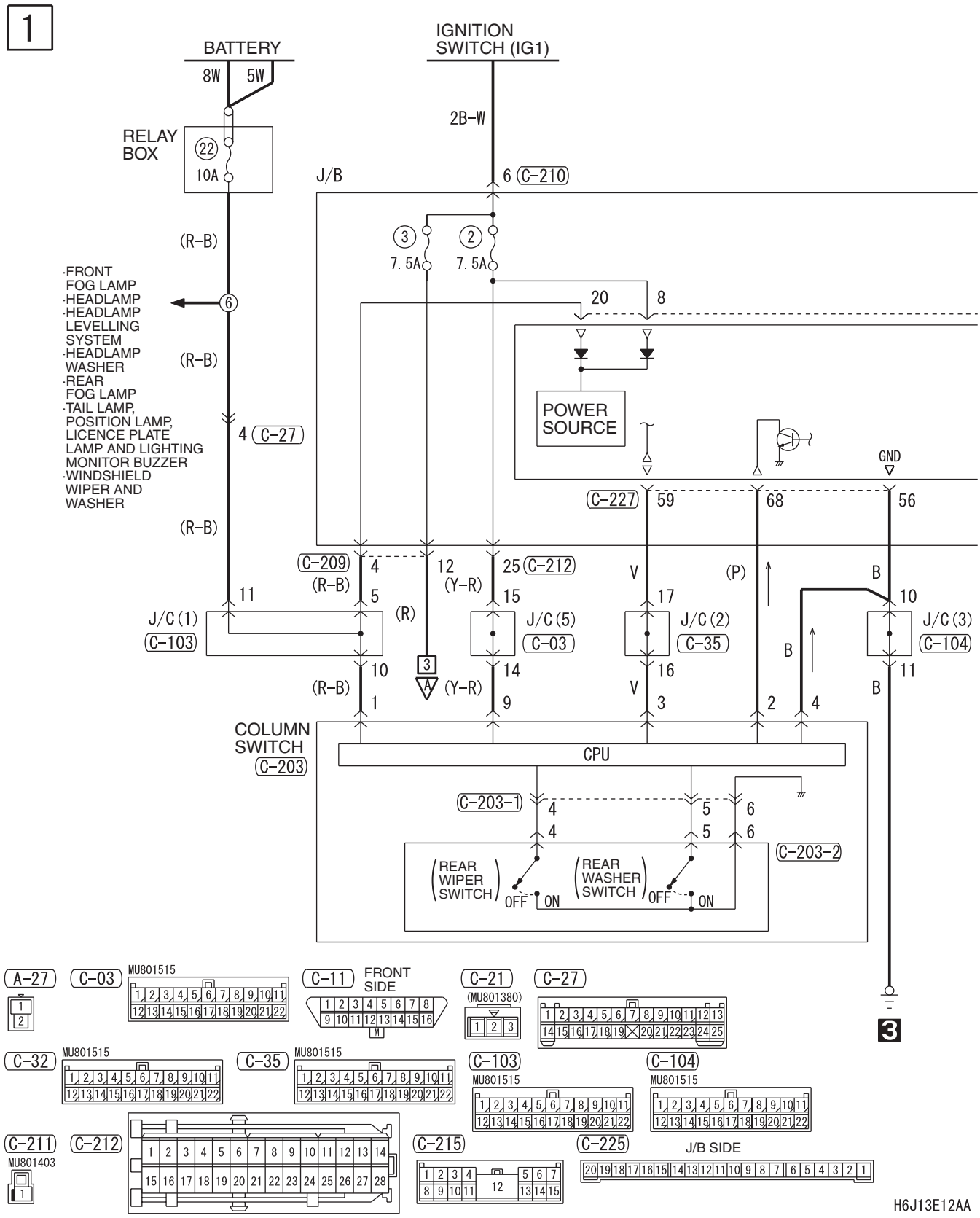

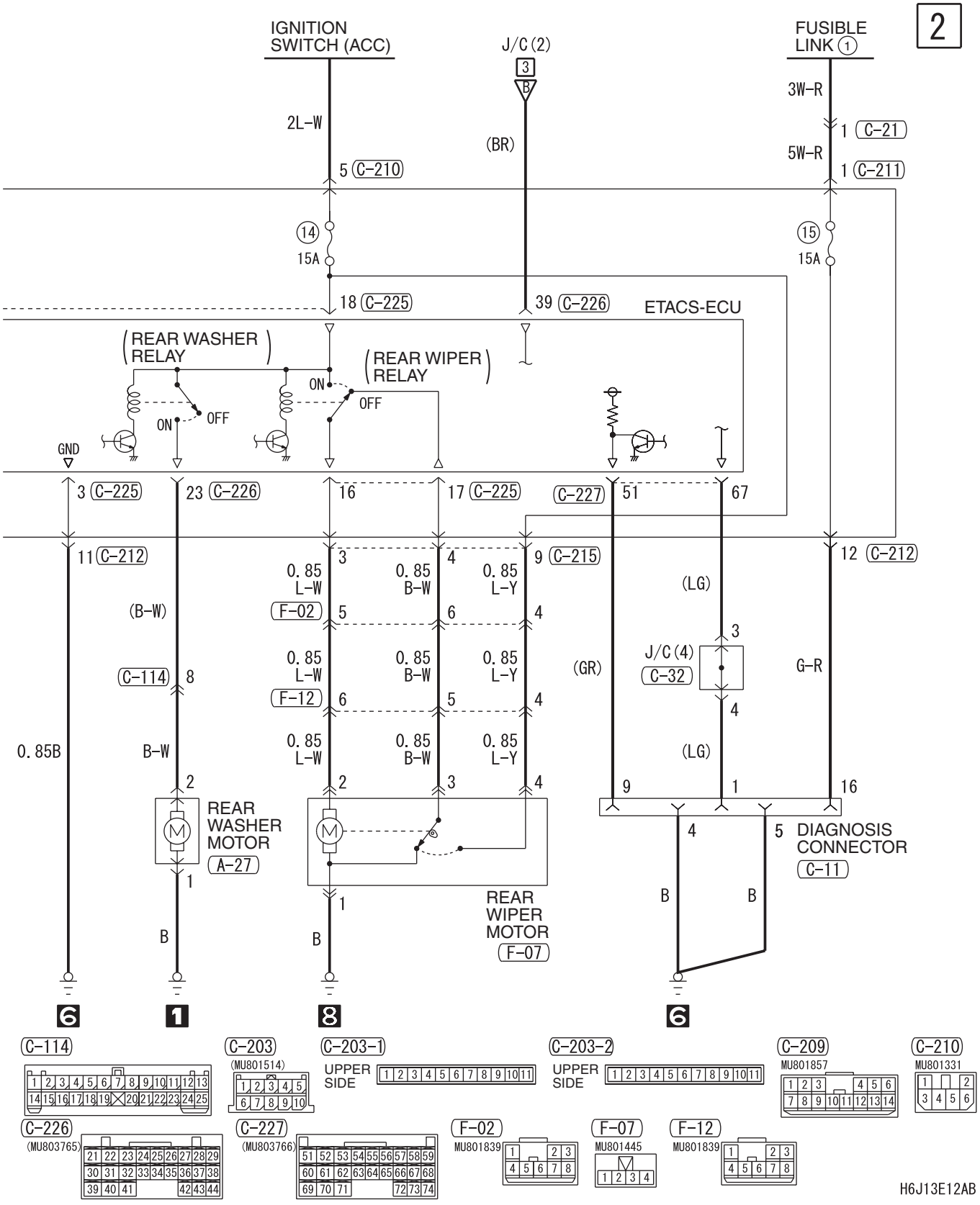
2
IGNITION SWITCH (ACC)
J/C (2)
FUSIBLE LINK (1)
2L-W
(BR)
3W-R
5W-R
5 (C-210)
1 (C-21)
1 (C-211)
(14)
15A
(15)
15A
18 (C-225)
39 (C-226)
ETACS-ECU
REAR WASHER RELAY
REAR WIPER RELAY
ON
OFF
GND
3 (C-225)
23 (C-226)
16
17 (C-225)
(C-227)
51
67
11 (C-212)
3
4
9 (C-215)
12 (C-212)
0.85 L-W
0.85 B-W
0.85 L-Y
(B-W)
(LG)
F-02
5
6
4
3
J/C (4)
C-32
(C-114)
8
F-12
(GR)
G-R
0.85B
B-W
2
REAR WASHER MOTOR
A-27
REAR WIPER MOTOR
F-07
1
B
9
16
DIAGNOSIS CONNECTOR
C-11
6
1
8
6
C-114
C-203
(MU801514)
C-203-1
UPPER SIDE
C-203-2
UPPER SIDE
C-209
MU801857
C-210
MU801331
C-226
(MU803765)
C-227
(MU803766)
F-02
MU801839
F-07
MU801445
F-12
MU801839
H6J13E12AB

REAR WIPER AND WASHER <LHD> (CONTINUED)

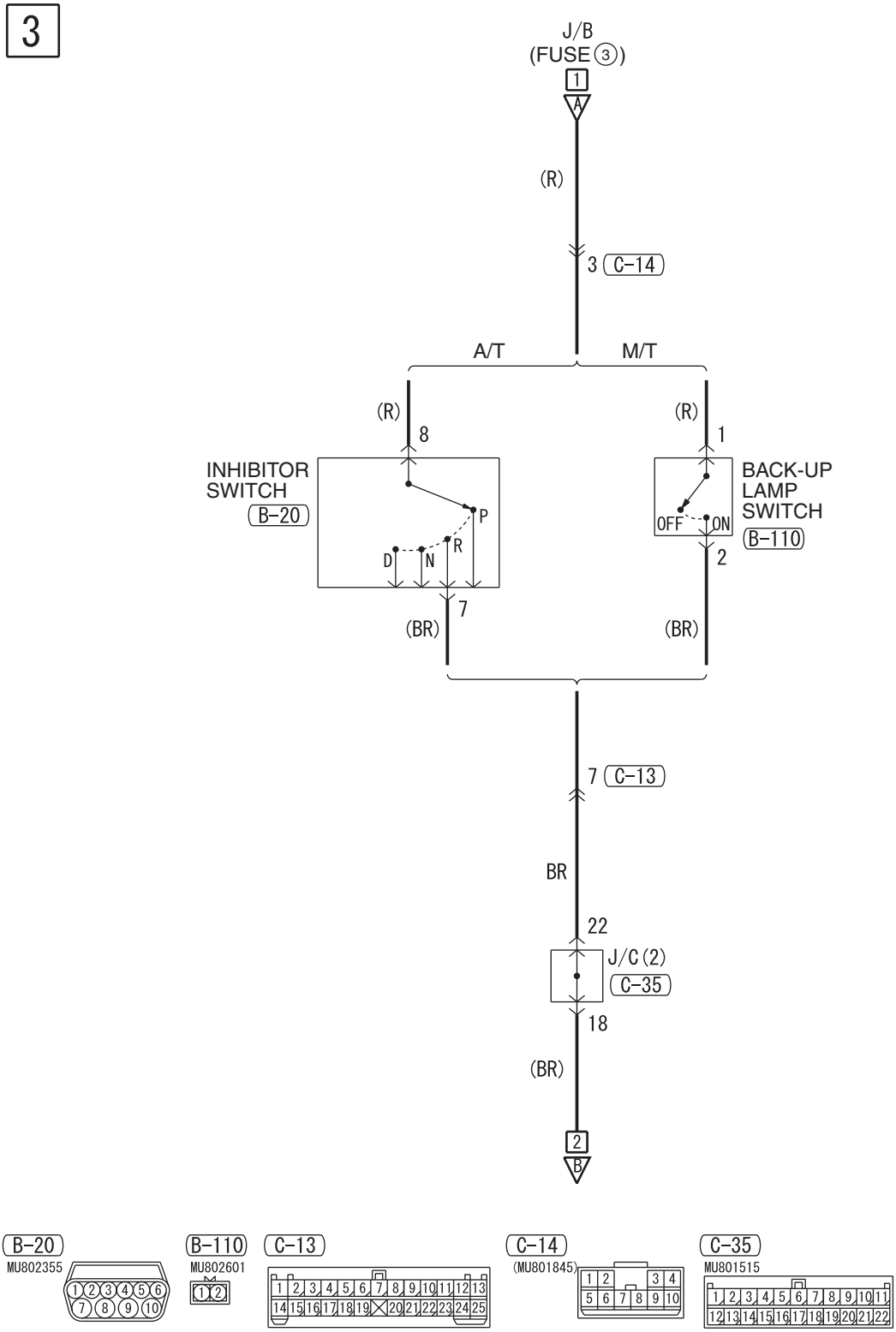

Wire colour code
B : Black LG : Light green G : Green L : Blue W : White Y : Yellow SB : Sky blue
BR : Brown O : Orange GR : Grey R : Red P : Pink V : Violet PU : Purple

H6J13E12BA

NOTES

REAR WIPER AND WASHER <RHD>

M1901006201650

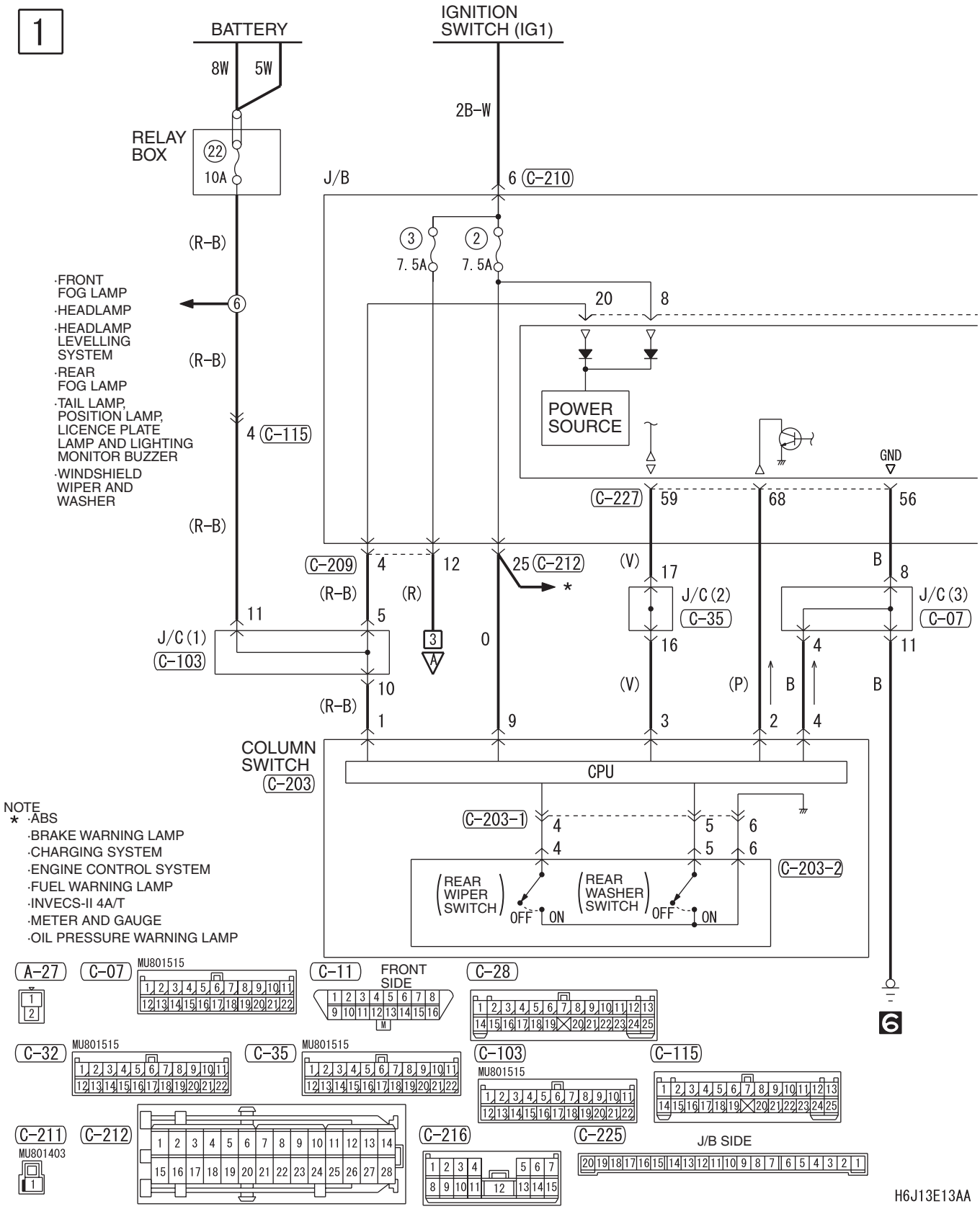

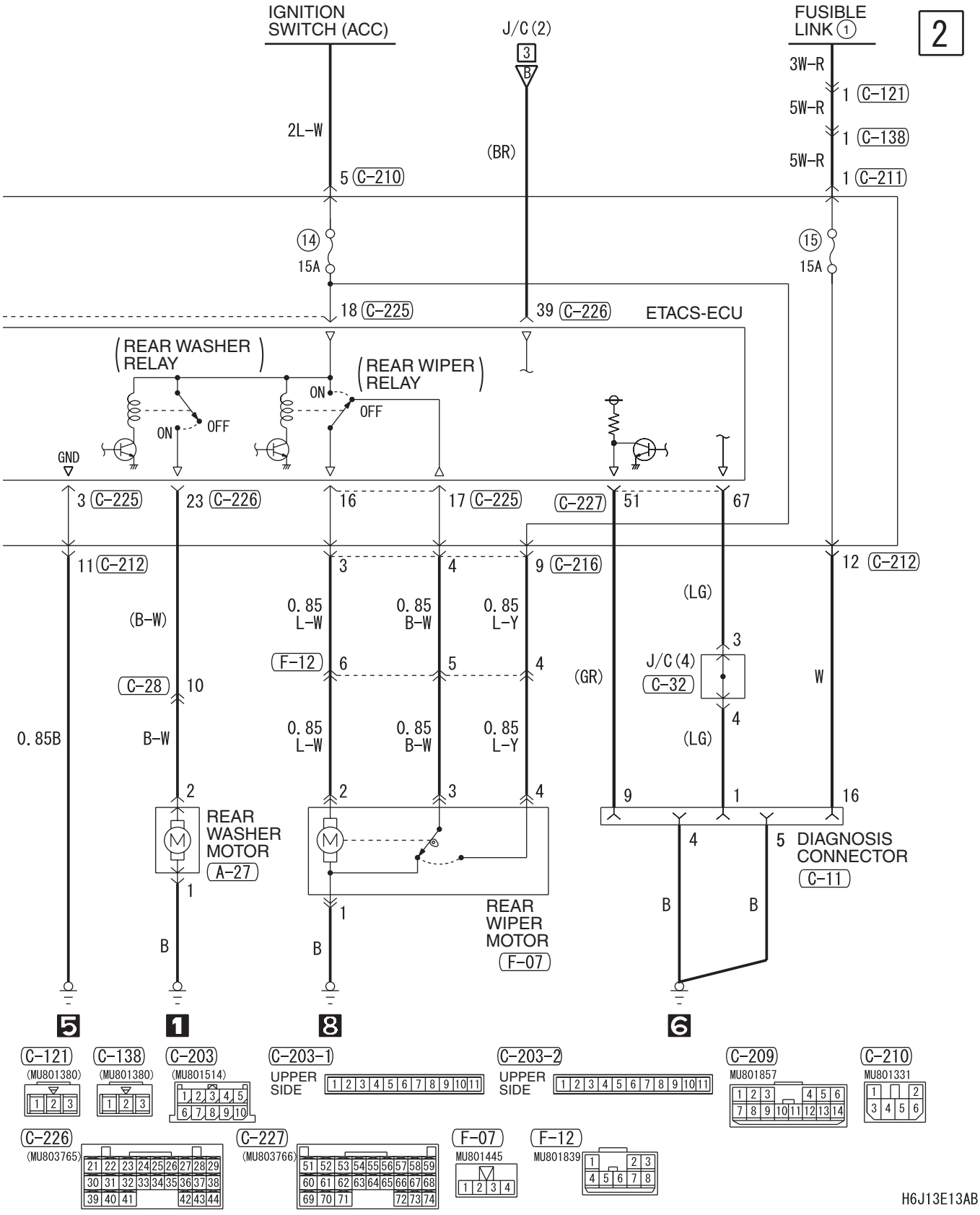
IGNITION SWITCH (ACC)
J/C (2)
FUSIBLE LINK (1)
2
3W-R
5W-R
5W-R
1 (C-121)
1 (C-138)
1 (C-211)
2L-W
(BR)
5 (C-210)
(14)
15A
(15)
15A
18 (C-225)
39 (C-226)
ETACS-ECU
REAR WASHER RELAY
REAR WIPER RELAY
ON
OFF
ON
OFF
GND
3 (C-225)
23 (C-226)
16
17 (C-225)
(C-227) 51
67
11 (C-212)
3
4
9 (C-216)
12 (C-212)
(B-W)
0.85 L-W
0.85 B-W
0.85 L-Y
(LG)
F-12
6
5
4
J/C (4)
C-32
(GR)
W
C-28
10
0.85B
B-W
0.85 L-W
0.85 B-W
0.85 L-Y
(LG)
2
2
3
4
9
1
16
REAR WASHER MOTOR
A-27
4
5
DIAGNOSIS CONNECTOR
C-11
1
1
B
B
B
B
REAR WIPER MOTOR
F-07
5
1
8
6
C-121
(MU801380)
C-138
(MU801380)
C-203
(MU801514)
C-203-1
UPPER SIDE
C-203-2
UPPER SIDE
C-209
MU801857
C-210
MU801331
C-226
(MU803765)
C-227
(MU803766)
F-07
MU801445
F-12
MU801839
H6J13E13AB

REAR WIPER AND WASHER <RHD> (CONTINUED)

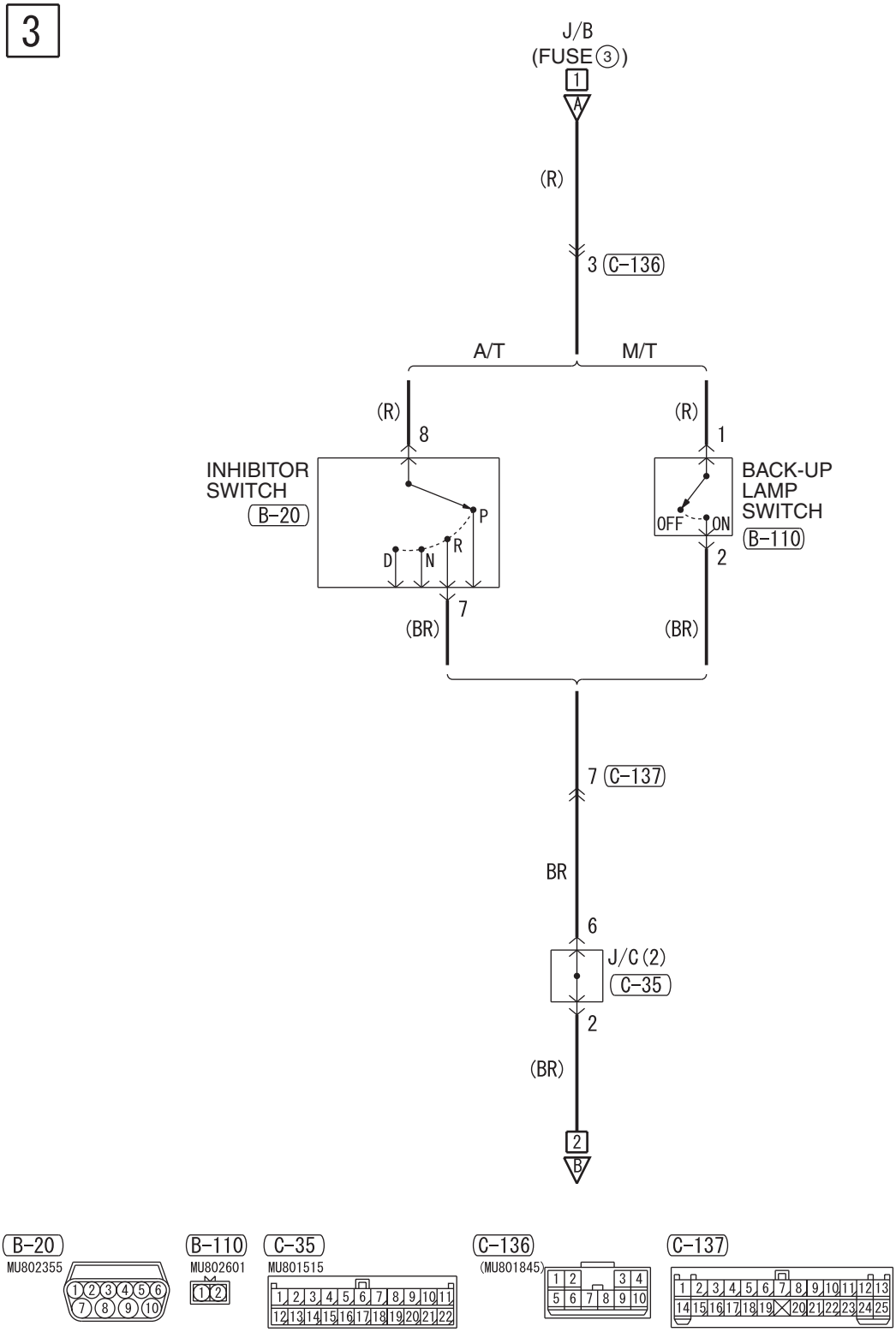

Wire colour code
B : Black LG : Light green G : Green L : Blue W : White Y : Yellow SB : Sky blue
BR : Brown O : Orange GR : Grey R : Red P : Pink V : Violet PU : Purple

H6J13E13BA

NOTES

REAR WINDOW DEFOGGER AND DOOR MIRROR HEATER

REAR WINDOW DEFOGGER AND DOOR MIRROR HEATER <LHD>

M1901013501114

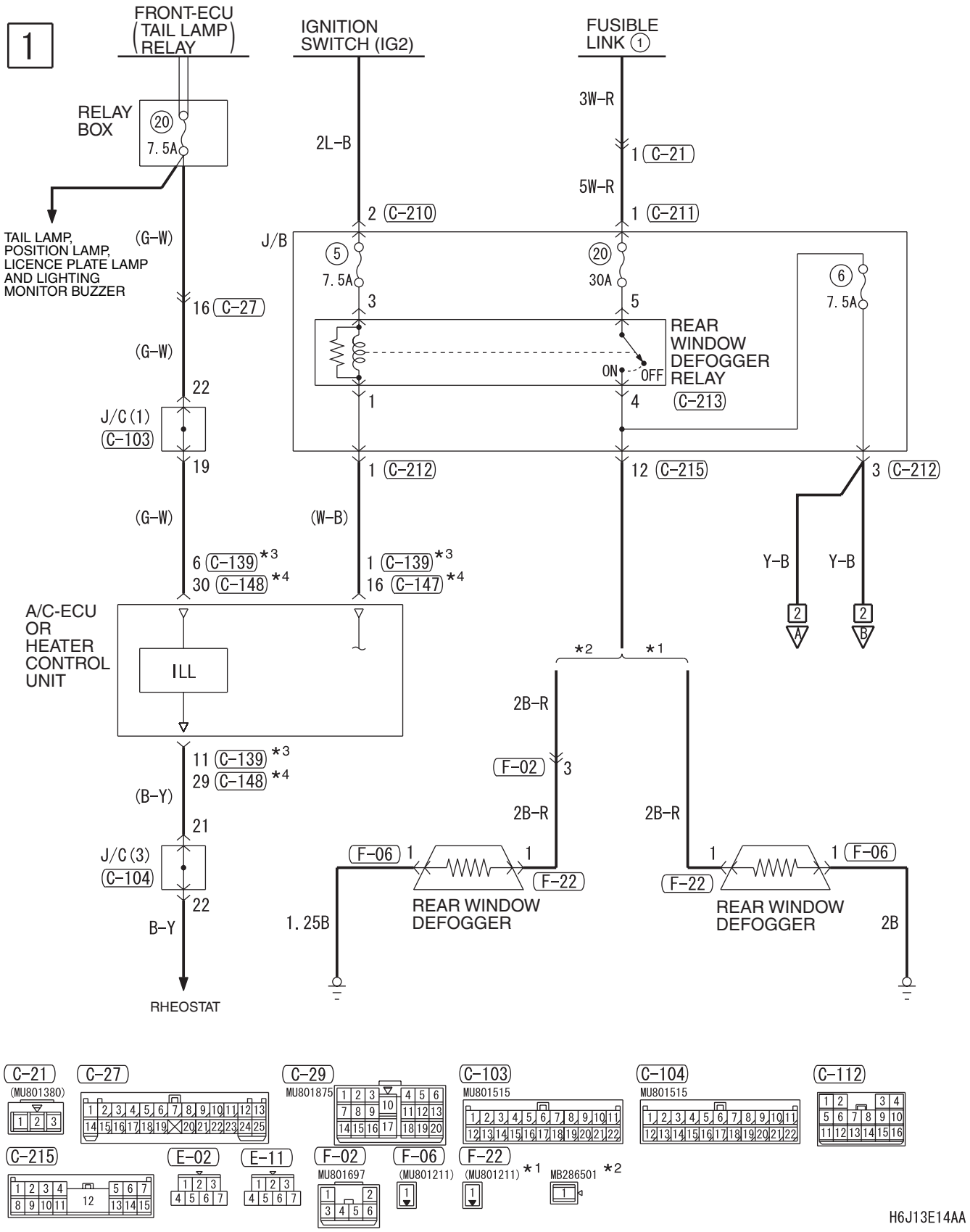

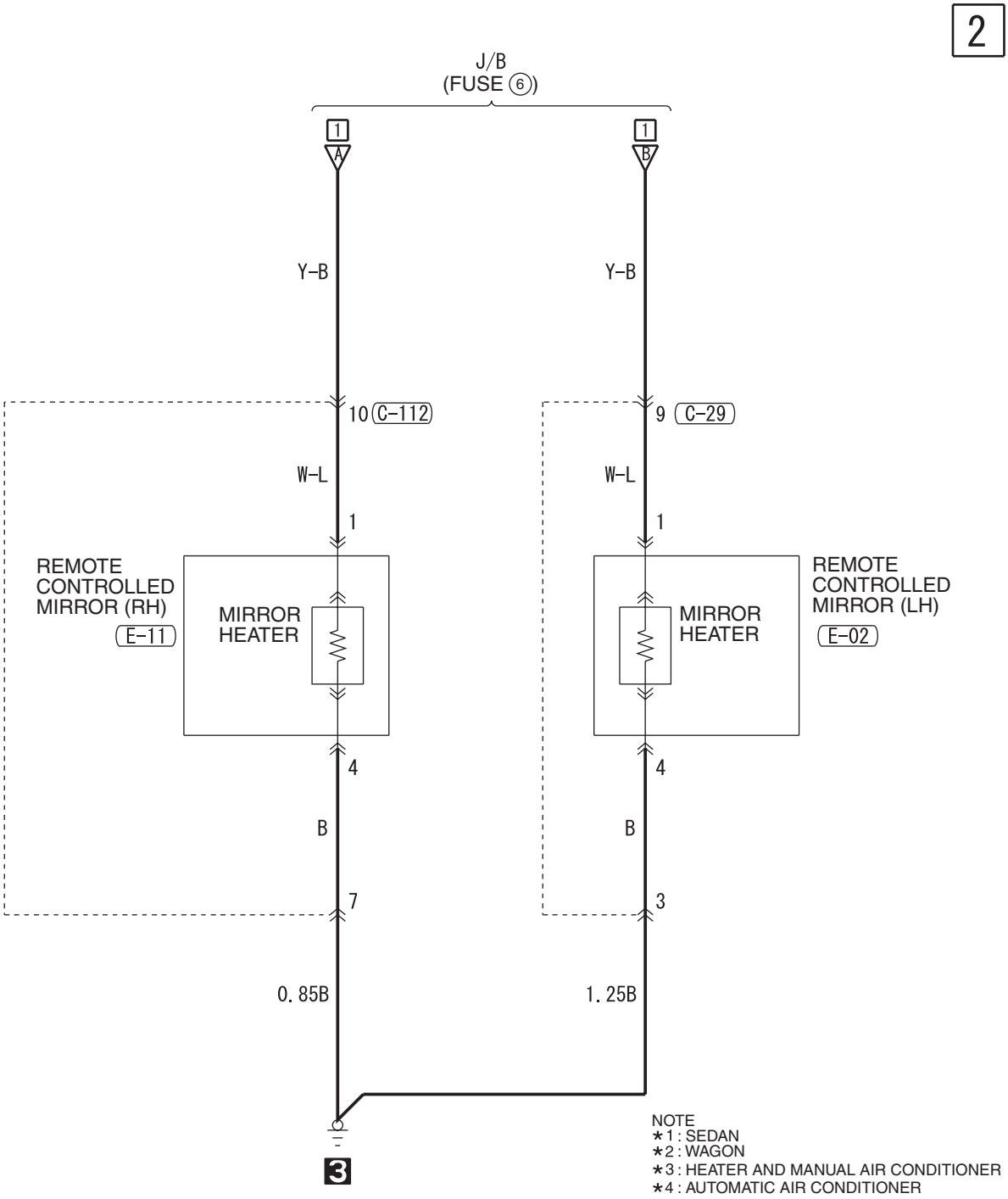

NOTE
★1 : SEDAN
★2 : WAGON
★3 : HEATER AND MANUAL AIR CONDITIONER
★4 : AUTOMATIC AIR CONDITIONER

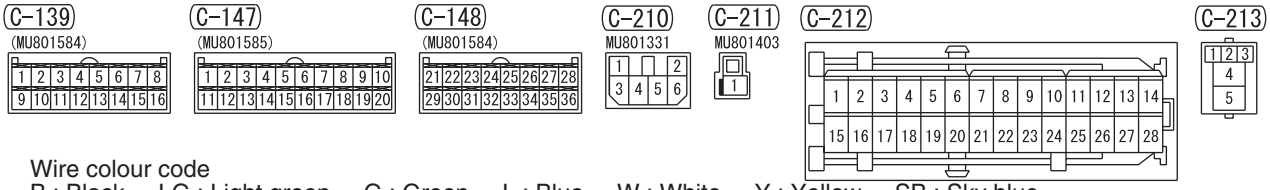

Wire colour code
B : Black LG : Light green G : Green L : Blue W : White Y : Yellow SB : Sky blue
BR : Brown O : Orange GR : Grey R : Red P : Pink V : Violet PU : Purple

H6J13E14AB

REAR WINDOW DEFOGGER AND DOOR MIRROR HEATER <RHD>

M1901013501125

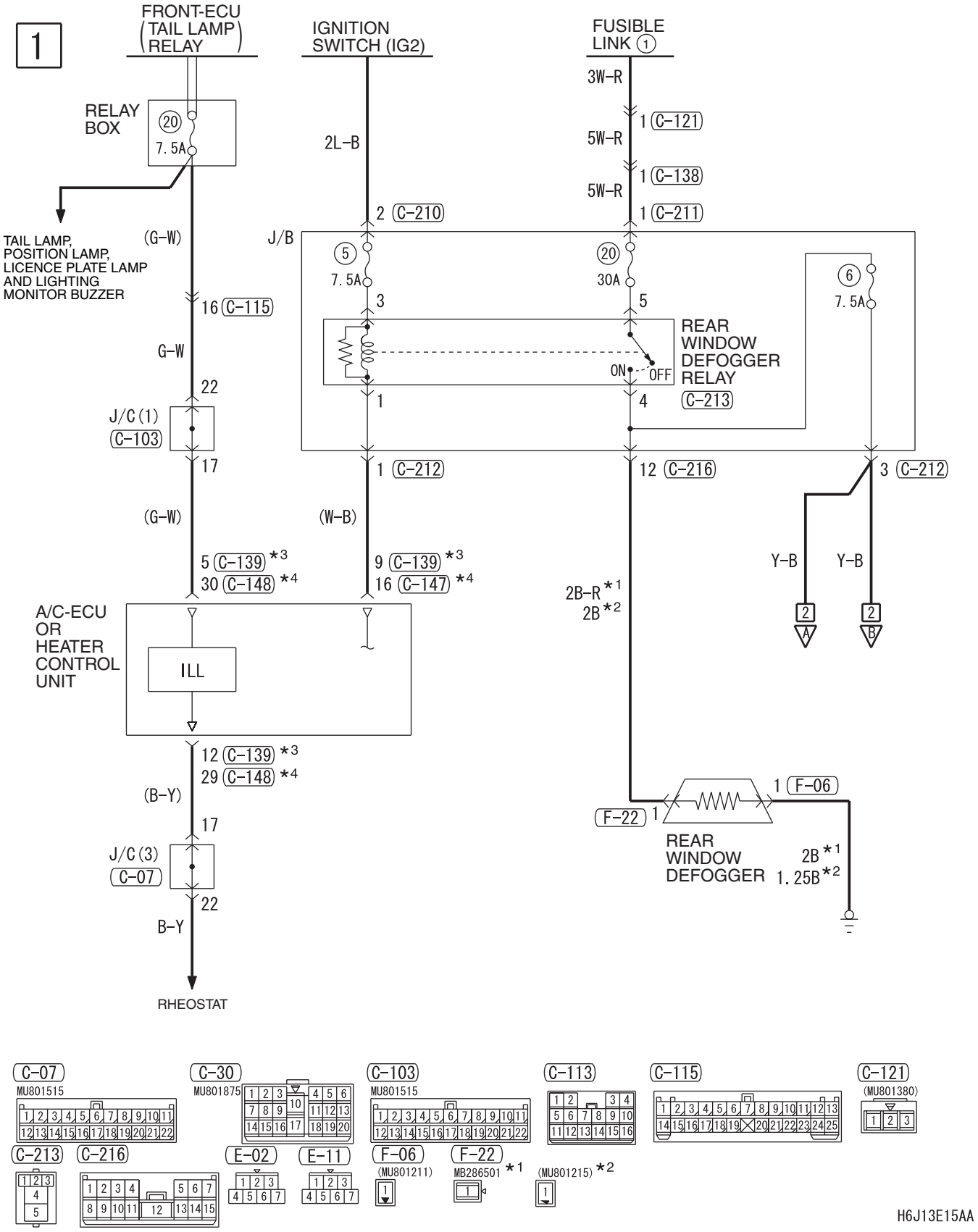

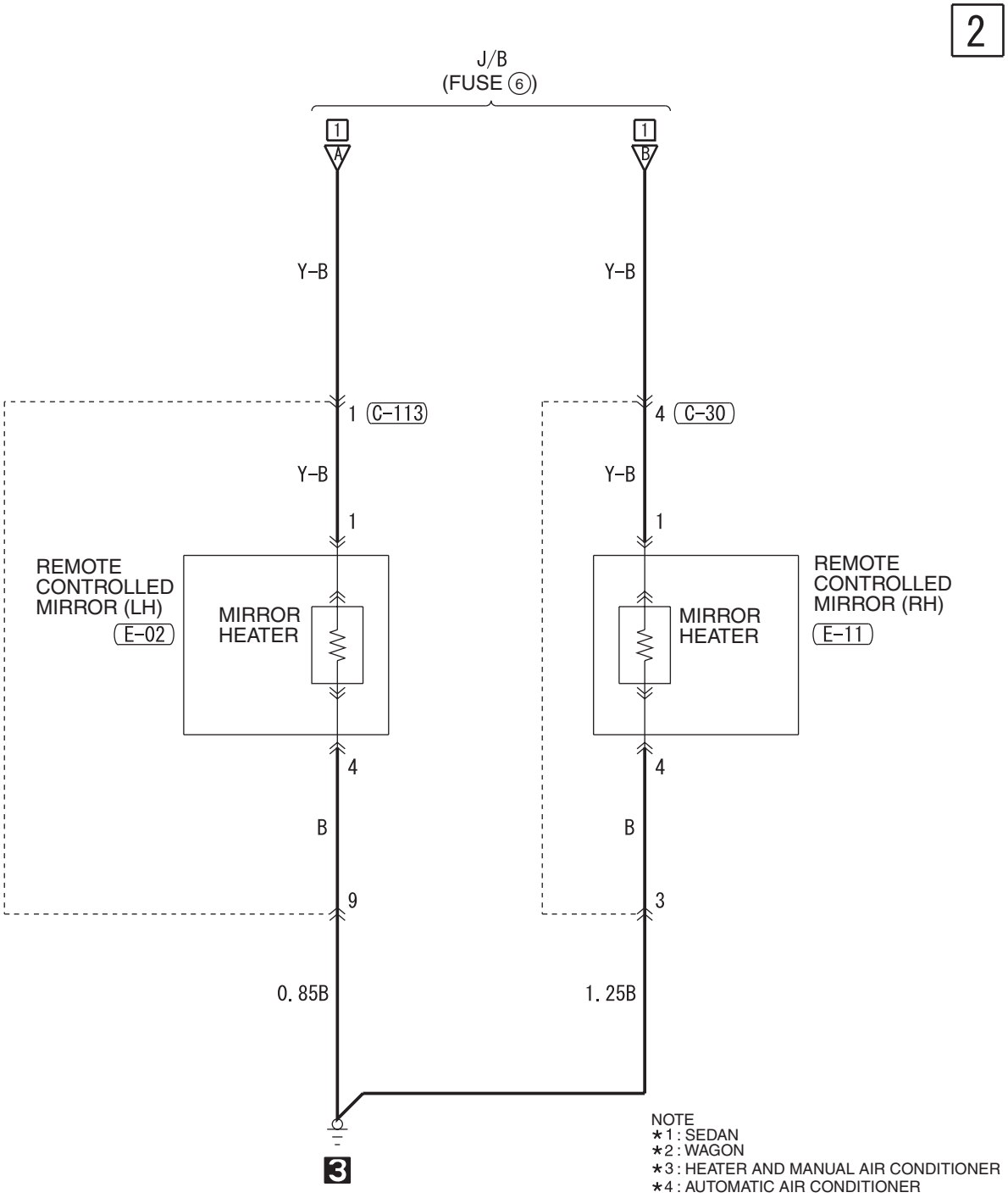

NOTE
★1 : SEDAN
★2 : WAGON
★3 : HEATER AND MANUAL AIR CONDITIONER
★4 : AUTOMATIC AIR CONDITIONER

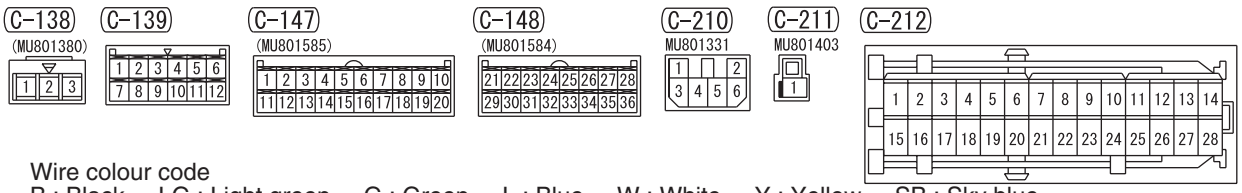

Wire colour code
B : Black LG : Light green G : Green L : Blue W : White Y : Yellow SB : Sky blue
BR : Brown O : Orange GR : Grey R : Red P : Pink V : Violet PU : Purple

H6J13E15AB

REMOTE CONTROLLED MIRROR

REMOTE CONTROLLED MIRROR <LHD>

M1901018800128

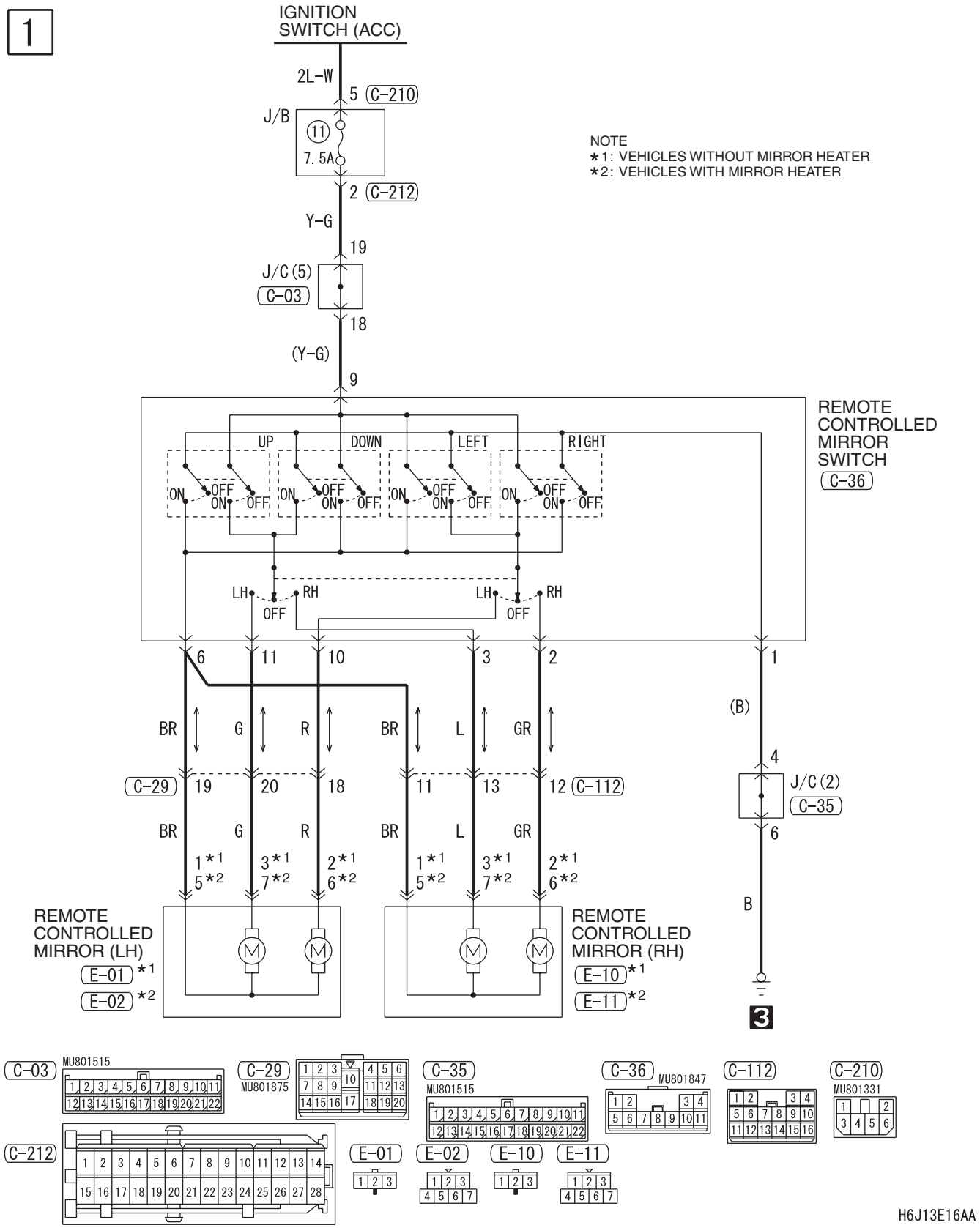

REMOTE CONTROLLED MIRROR <RHD>

M1901018800139

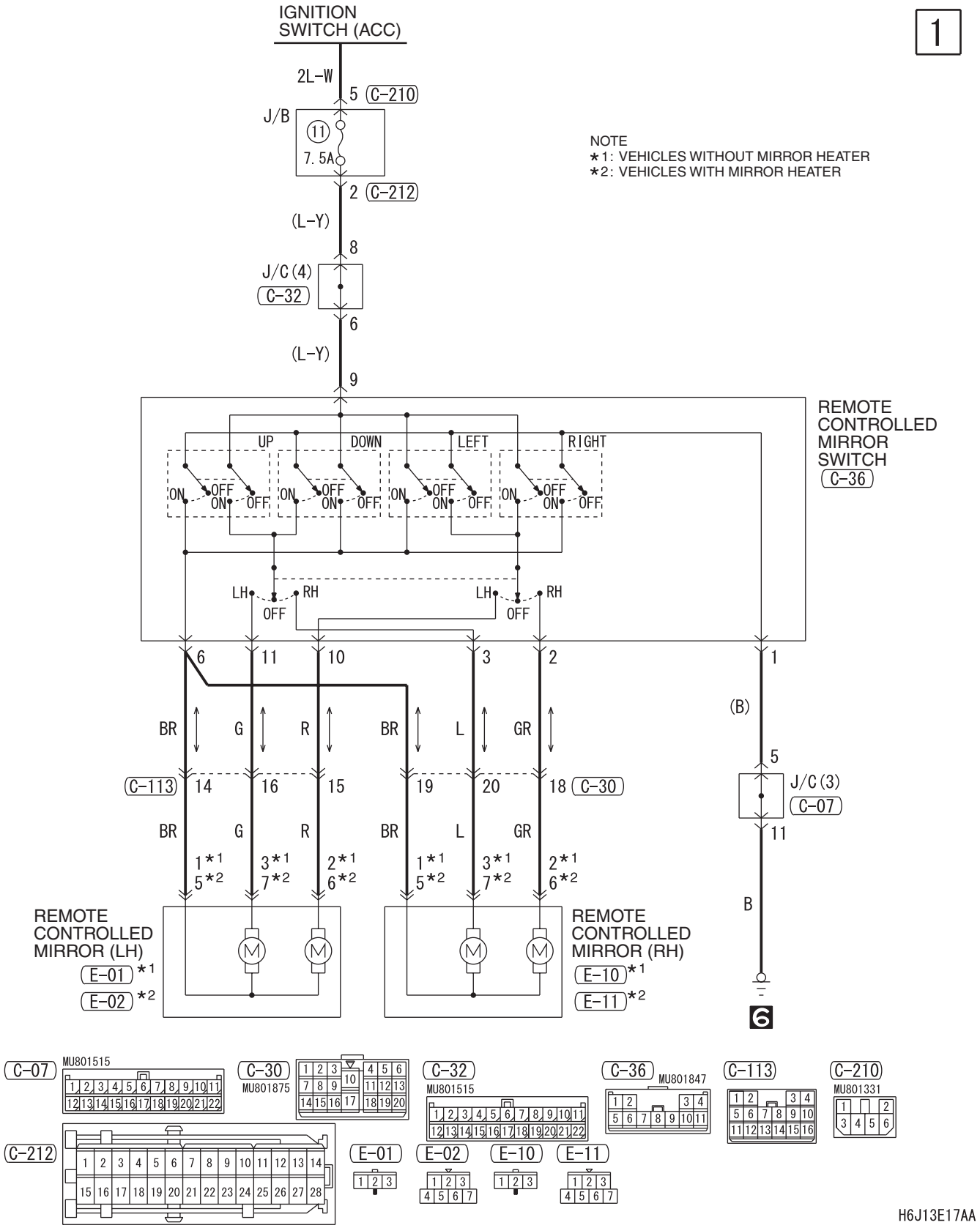

HEADLAMP WASHER

M1901018900103

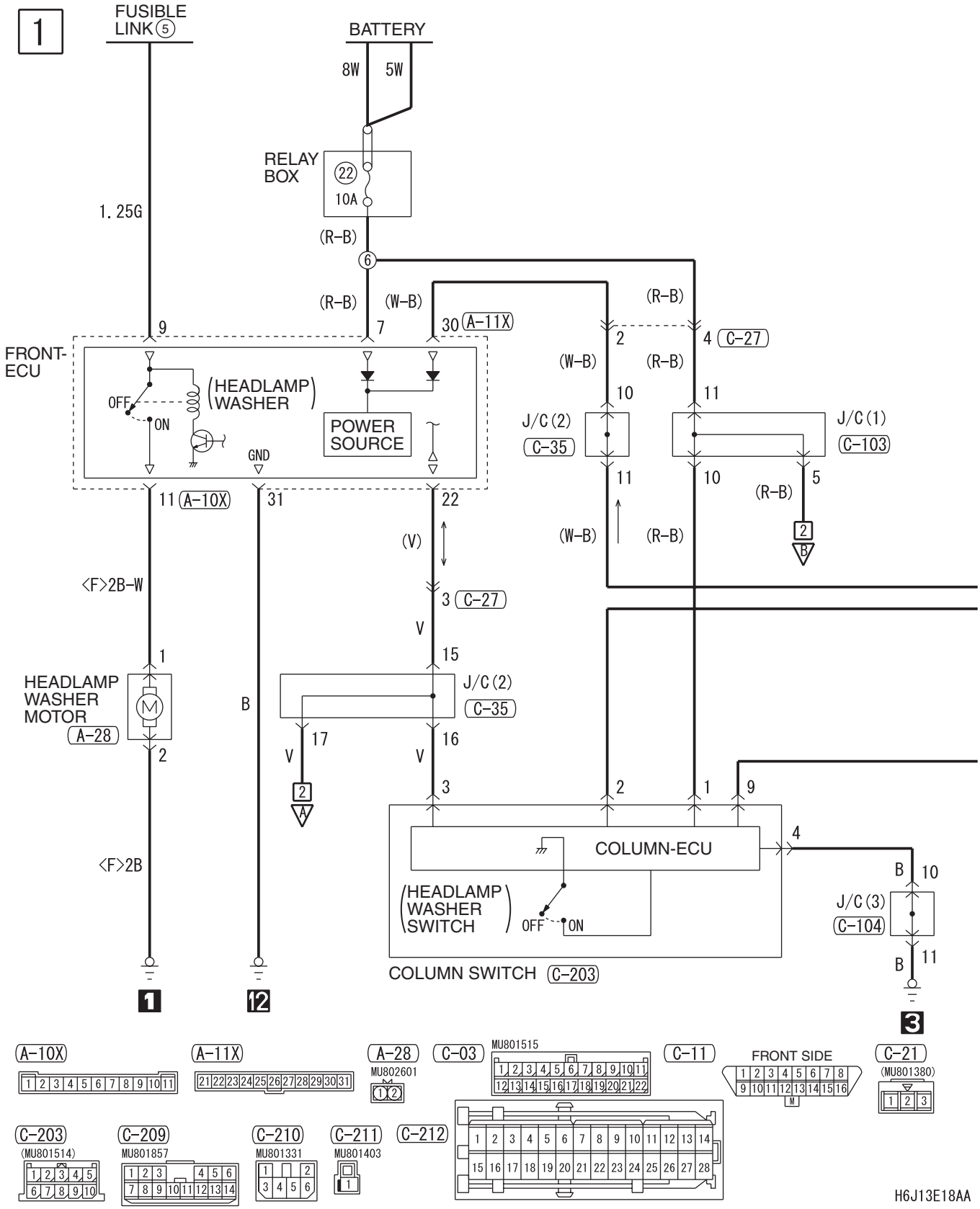

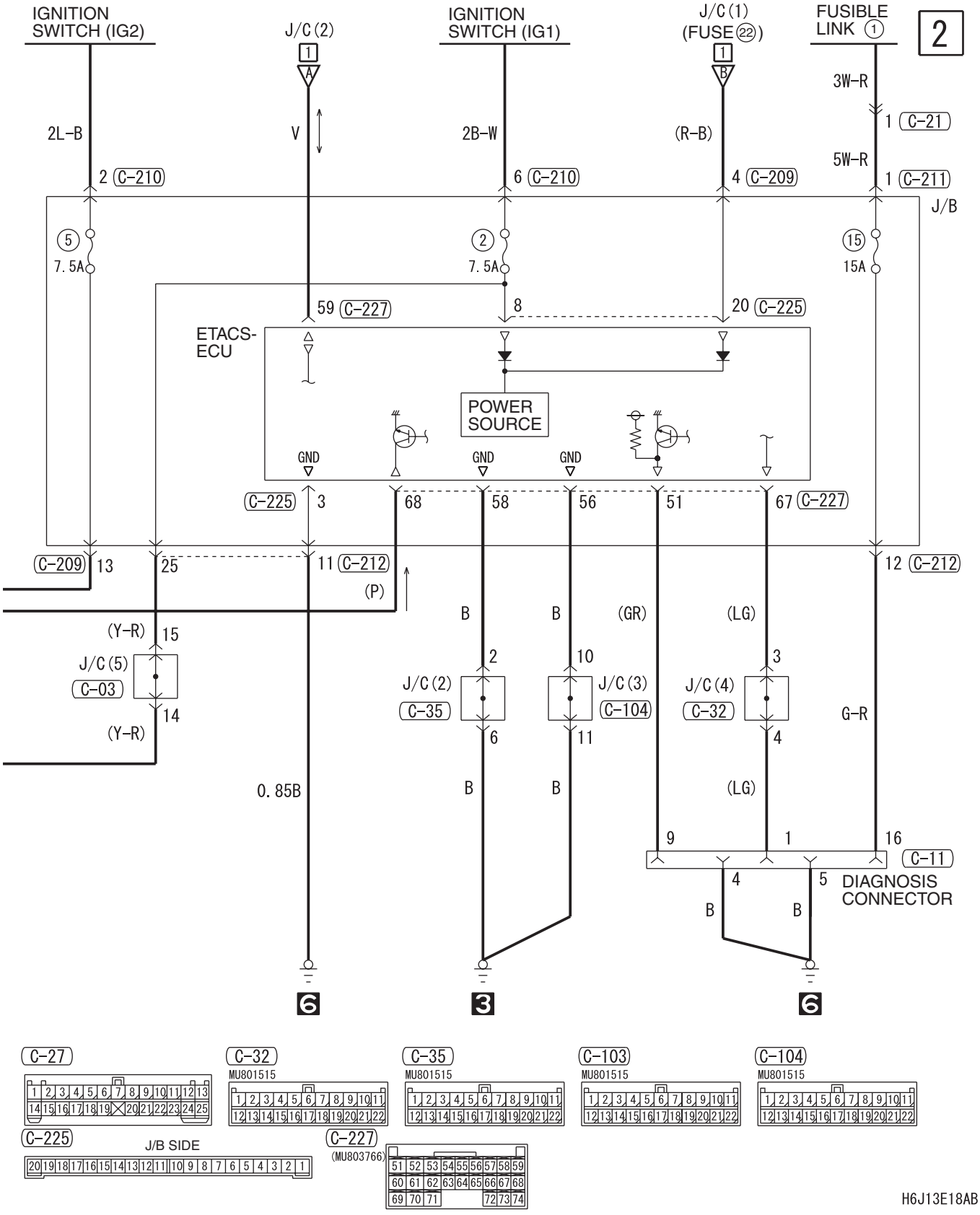
IGNITION SWITCH (IG2)
J/C (2)
IGNITION SWITCH (IG1)
J/C (1) (FUSE 22)
FUSIBLE LINK 1
2
2L-B
V
2B-W
(R-B)
3W-R
1 C-21
5W-R
2 C-210
6 C-210
4 C-209
1 C-211
J/B
5
7.5A
2
7.5A
15
15A
59 C-227
8
20 C-225
ETACS-ECU
POWER SOURCE
GND
GND
GND
C-225 3
68
58
56
51
67 C-227
C-209 13
25
11 C-212
12 C-212
(P)
B
B
(GR)
(LG)
(Y-R) 15
J/C (5)
C-03
14
(Y-R)
2
10
3
J/C (2)
C-35
J/C (3)
C-104
J/C (4)
C-32
G-R
6
11
4
0.85B
B
B
(LG)
9
1
16
C-11
4
5
DIAGNOSIS CONNECTOR
B
B
6
3
6

C-27
C-32
MU801515
C-35
MU801515
C-103
MU801515
C-104
MU801515
C-225
J/B SIDE
C-227
(MU803766)

H6J13E18AB

SPARE CONNECTOR (FOR AUDIO)

SPARE CONNECTOR (FOR AUDIO) <LHD>

M1901019000512

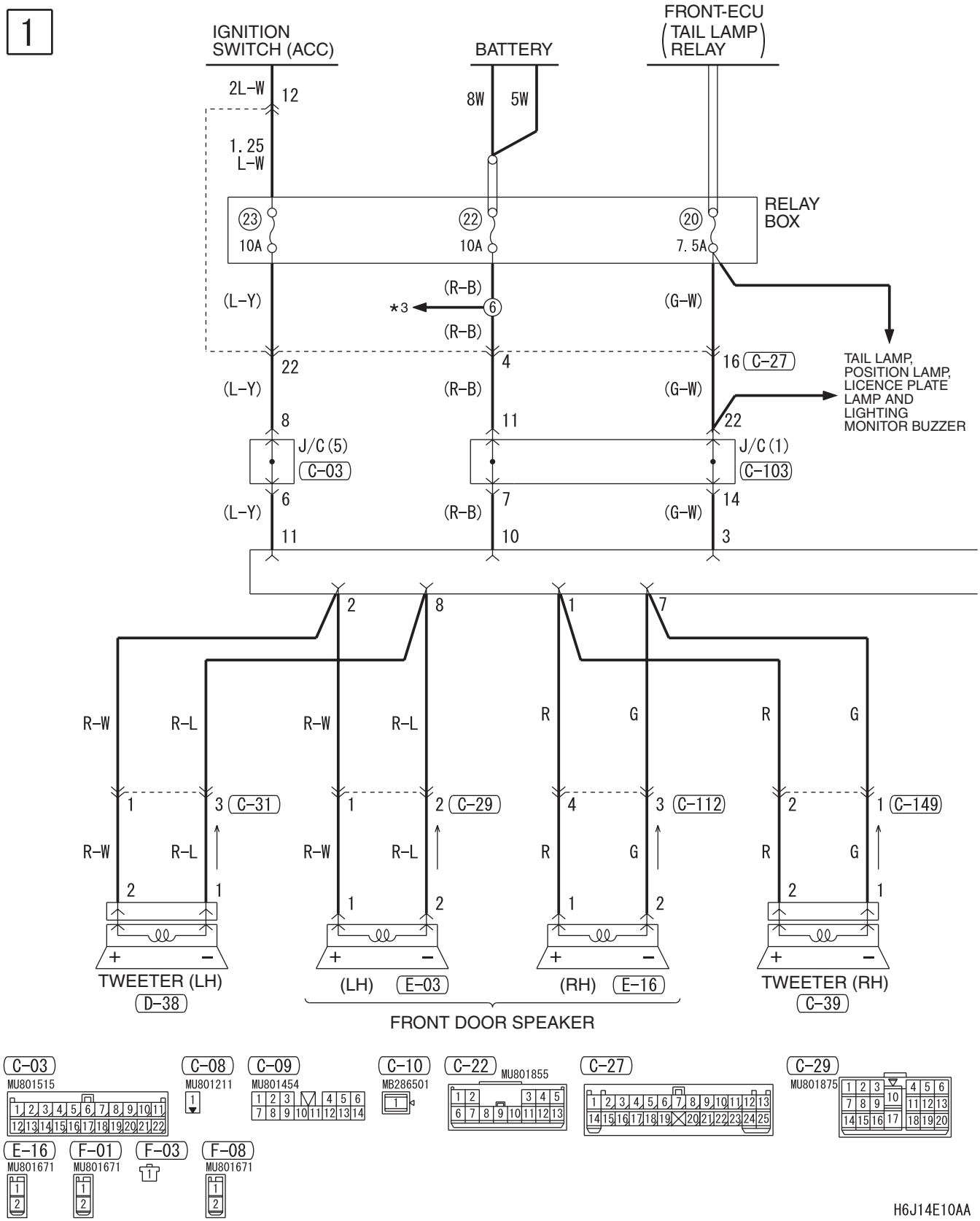

2

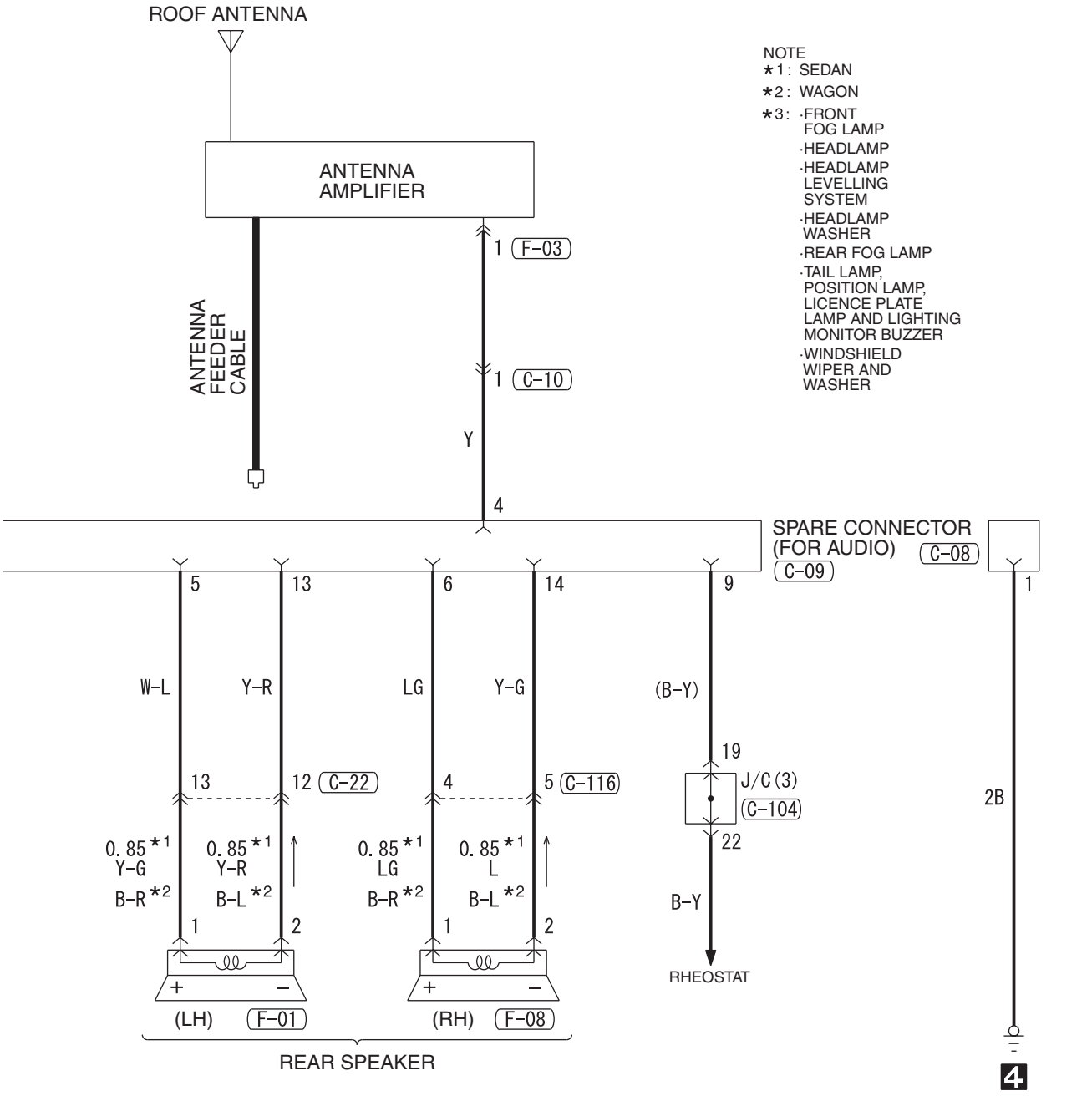

NOTE
*1: SEDAN
*2: WAGON
*3: ·FRONT FOG LAMP
·HEADLAMP
·HEADLAMP LEVELLING SYSTEM
·HEADLAMP WASHER
·REAR FOG LAMP
·TAIL LAMP, POSITION LAMP, LICENCE PLATE LAMP AND LIGHTING MONITOR BUZZER
·WINDSHIELD WIPER AND WASHER

Wire colour code
B : Black LG : Light green G : Green L : Blue W : White Y : Yellow SB : Sky blue
BR : Brown O : Orange GR : Grey R : Red P : Pink V : Violet PU : Purple

H6J14E10AB

SPARE CONNECTOR (FOR AUDIO) <RHD>

M1901019000523

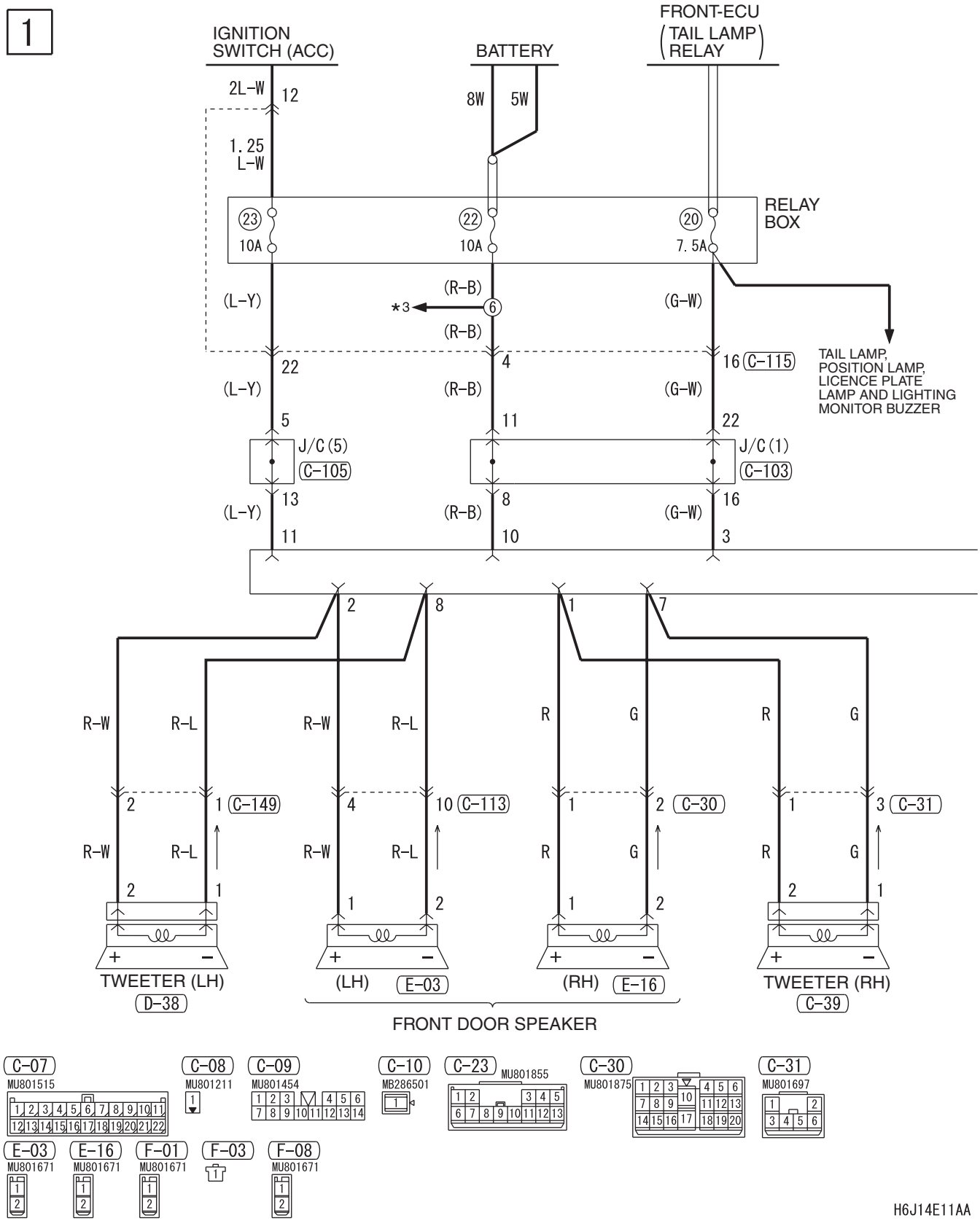

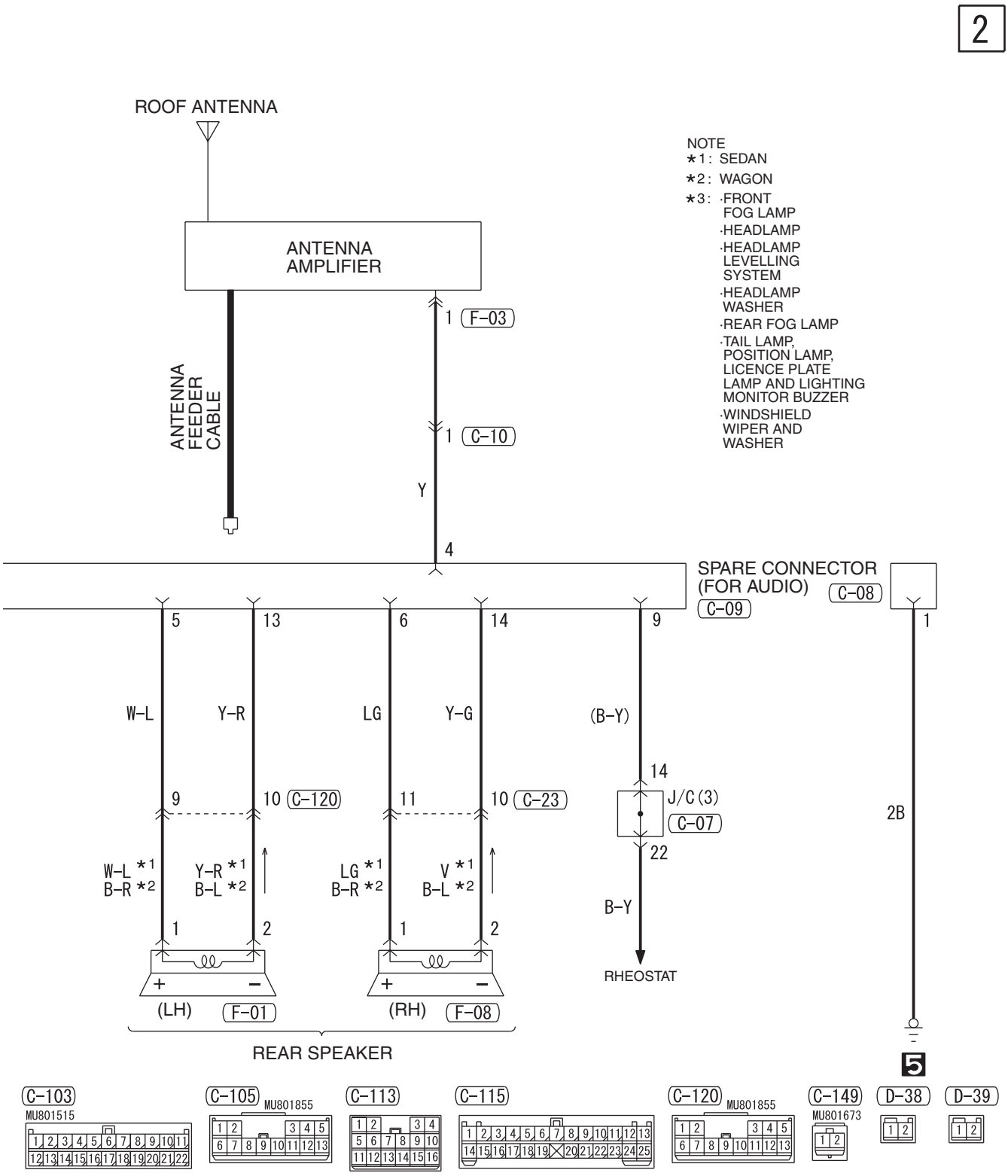

Wire colour code
B : Black LG : Light green G : Green L : Blue W : White Y : Yellow SB : Sky blue
BR : Brown O : Orange GR : Grey R : Red P : Pink V : Violet PU : Purple

H6J14E11AB

CLOCK

M1901007701272

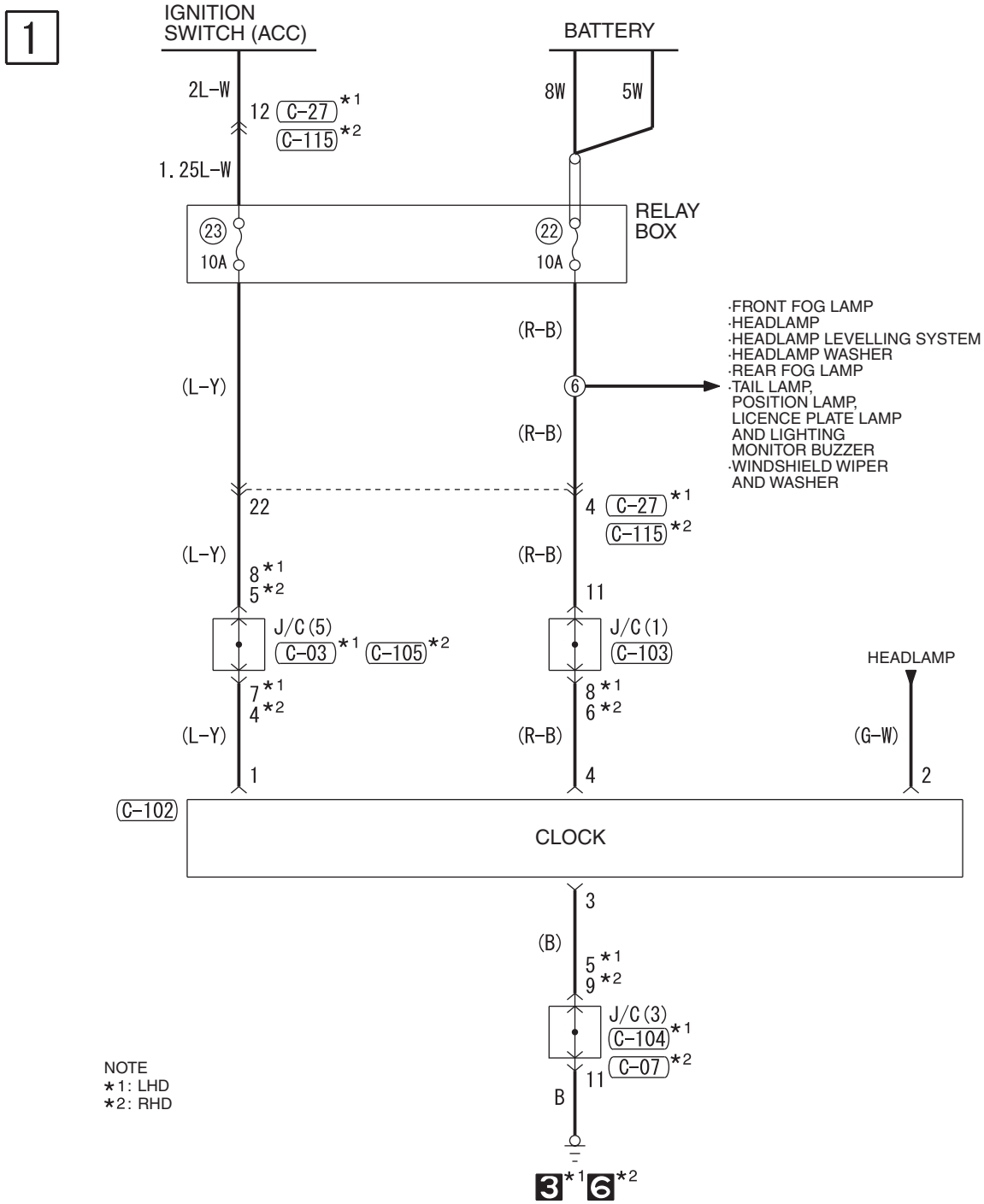

H6J14E12AA

CIGARETTE LIGHTER AND ASHTRAY ILLUMINATION LAMP

M1901007801257

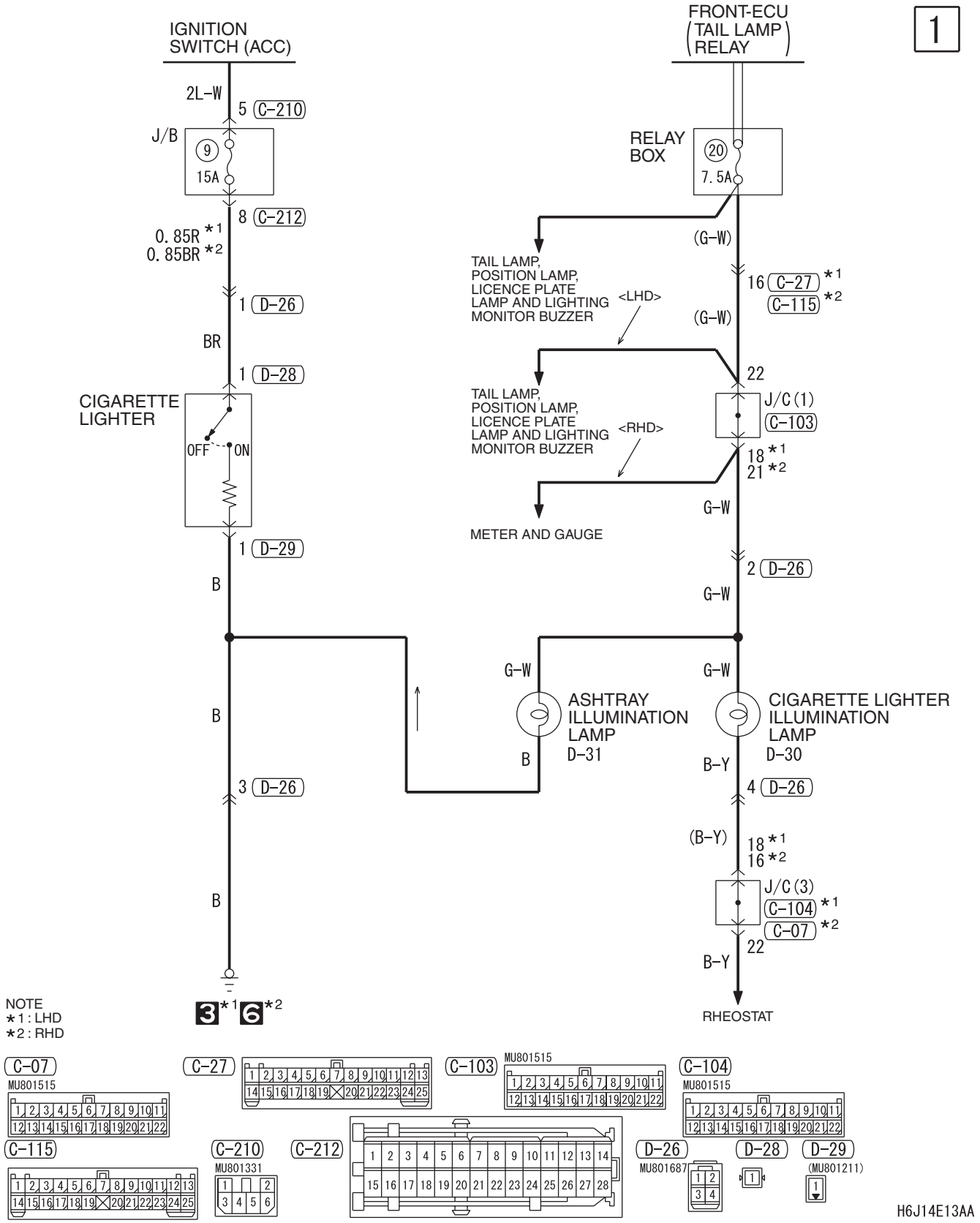

ACCESSORY SOCKET

M1901019100423

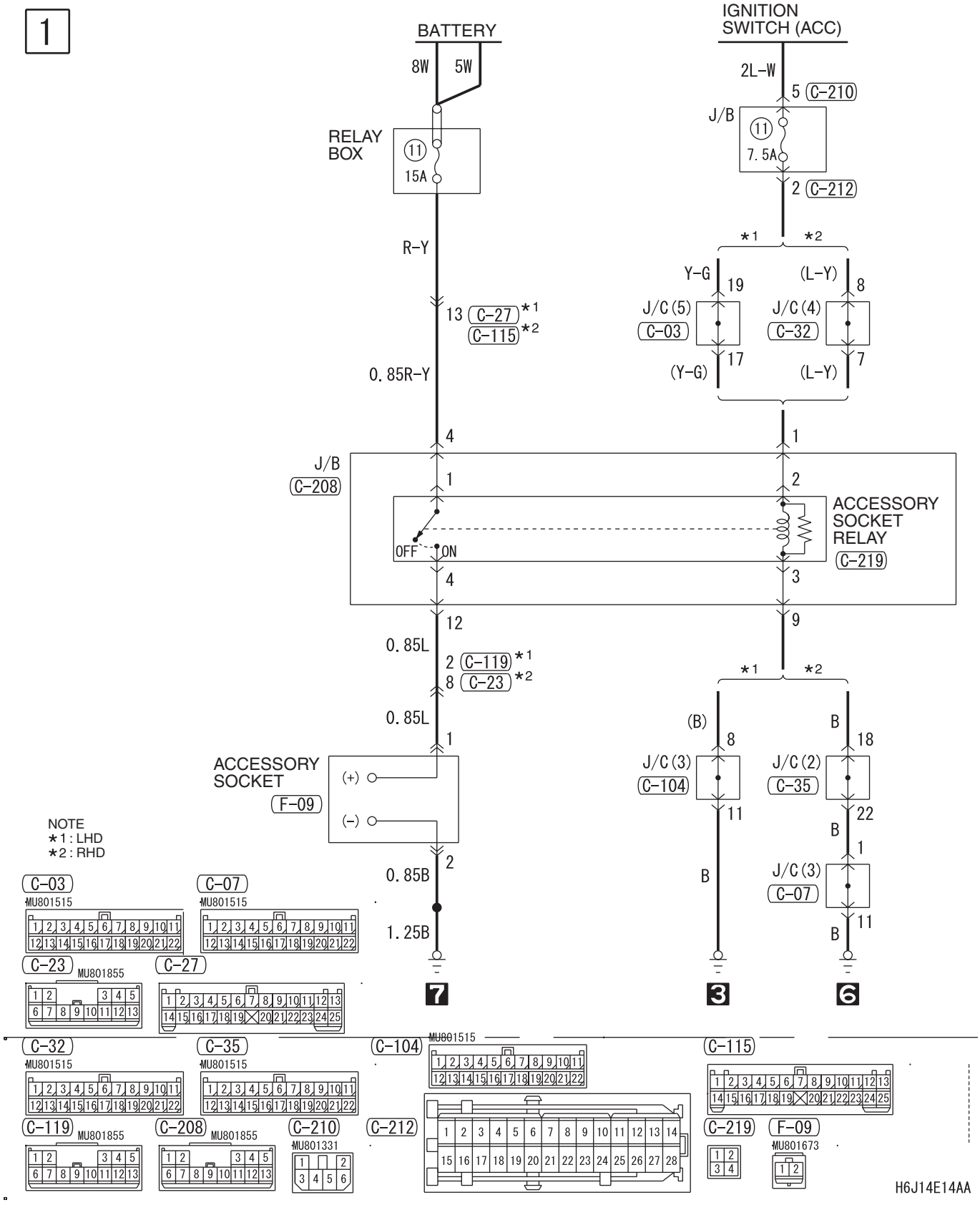

NOTES

IMMOBILIZER SYSTEM

IMMOBILIZER SYSTEM <LHD>

M1901013602277

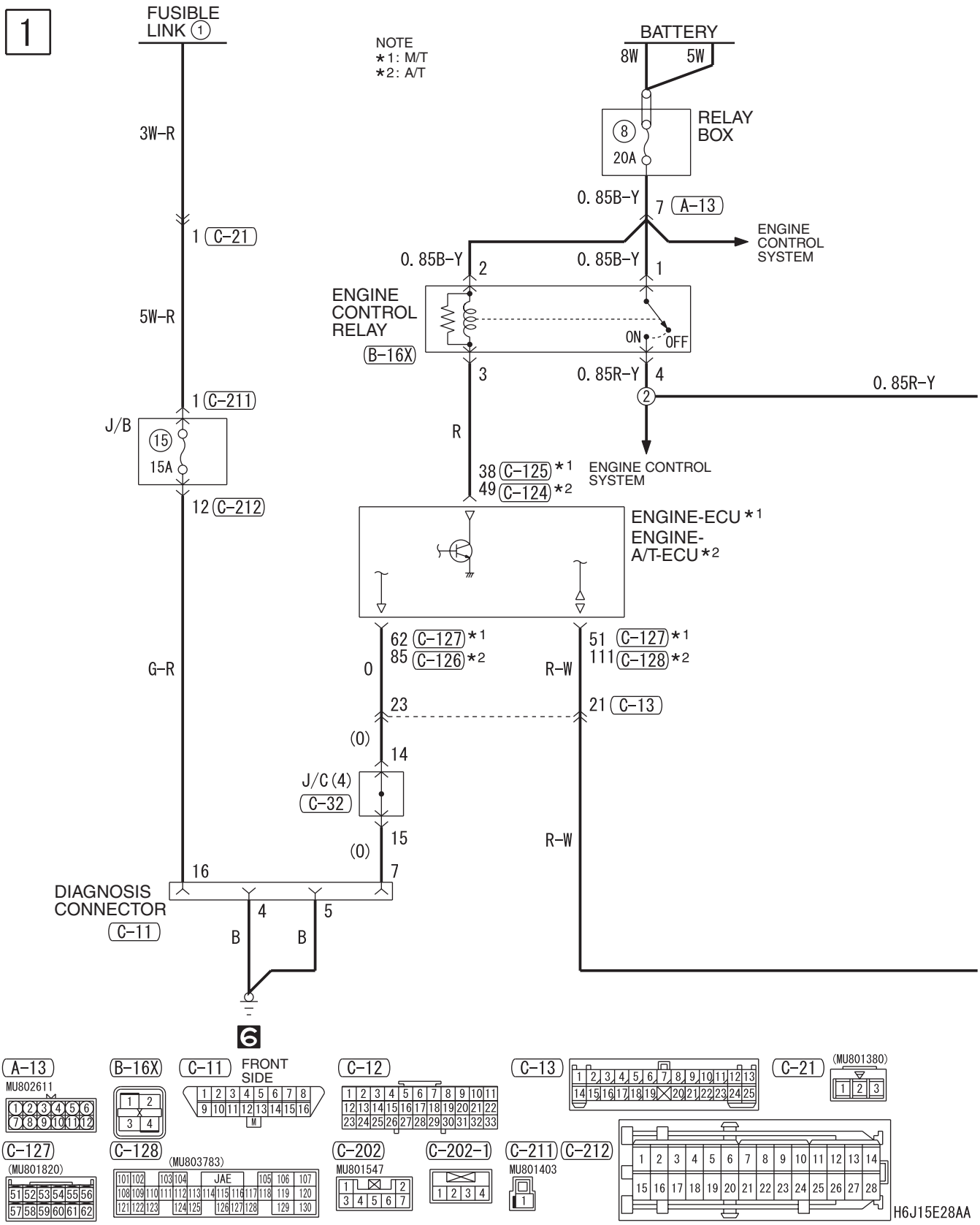

2

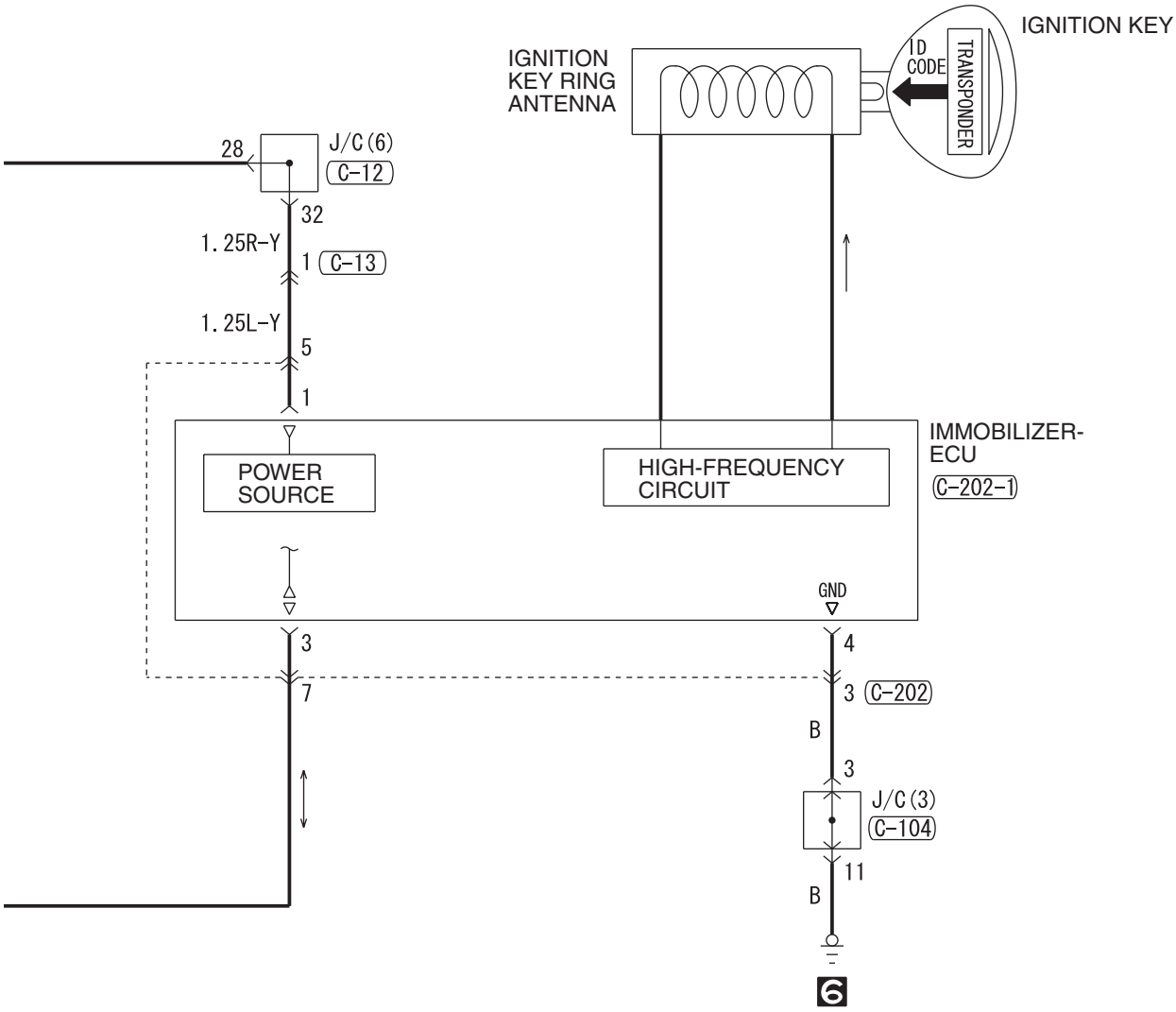

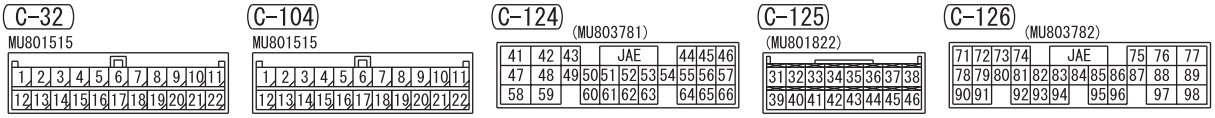

Wire colour code
B : Black LG : Light green G : Green L : Blue W : White Y : Yellow SB : Sky blue
BR : Brown O : Orange GR : Grey R : Red P : Pink V : Violet PU : Purple

H6J15E28AB

IMMOBILIZER SYSTEM <RHD>

M1901013602288

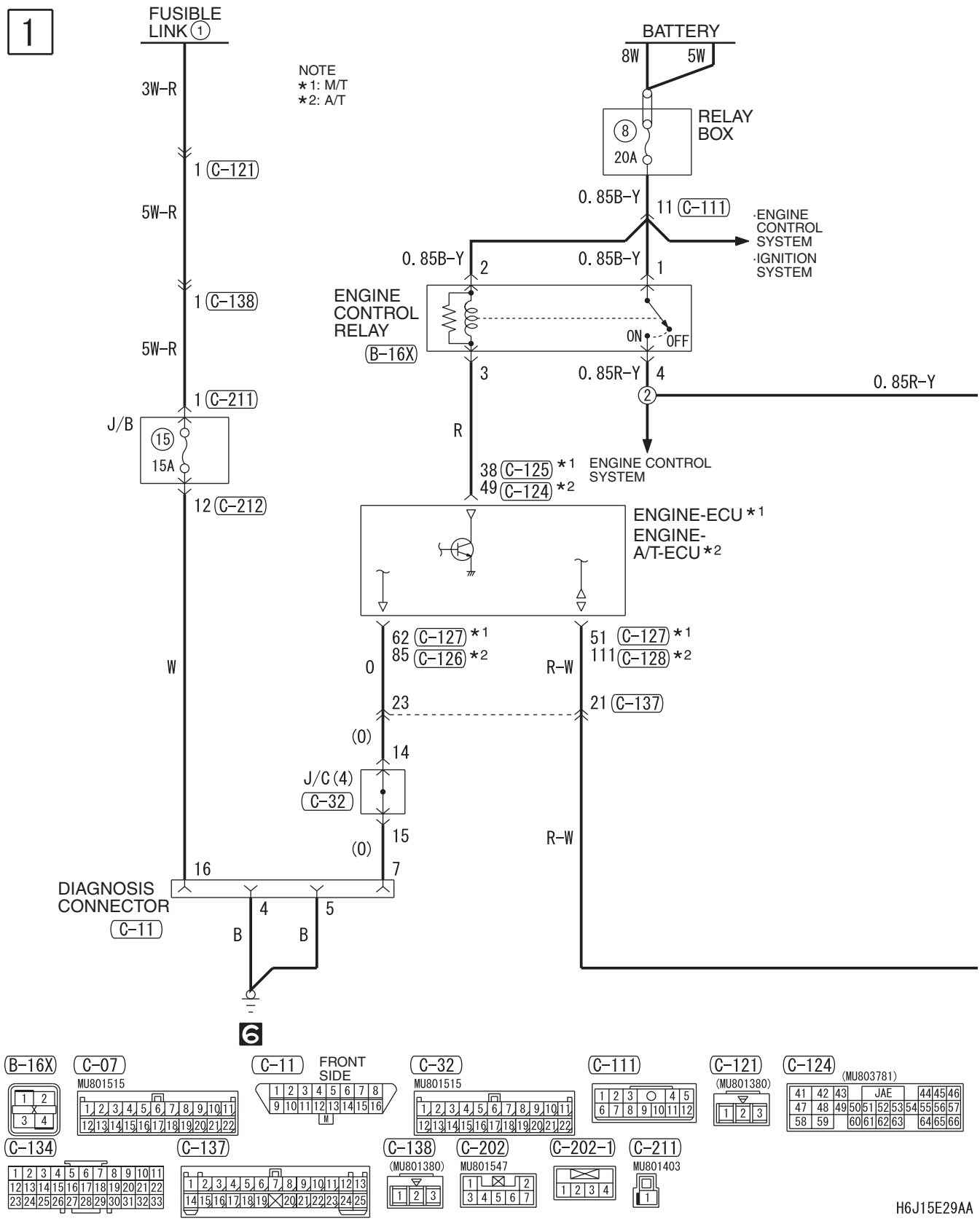

2

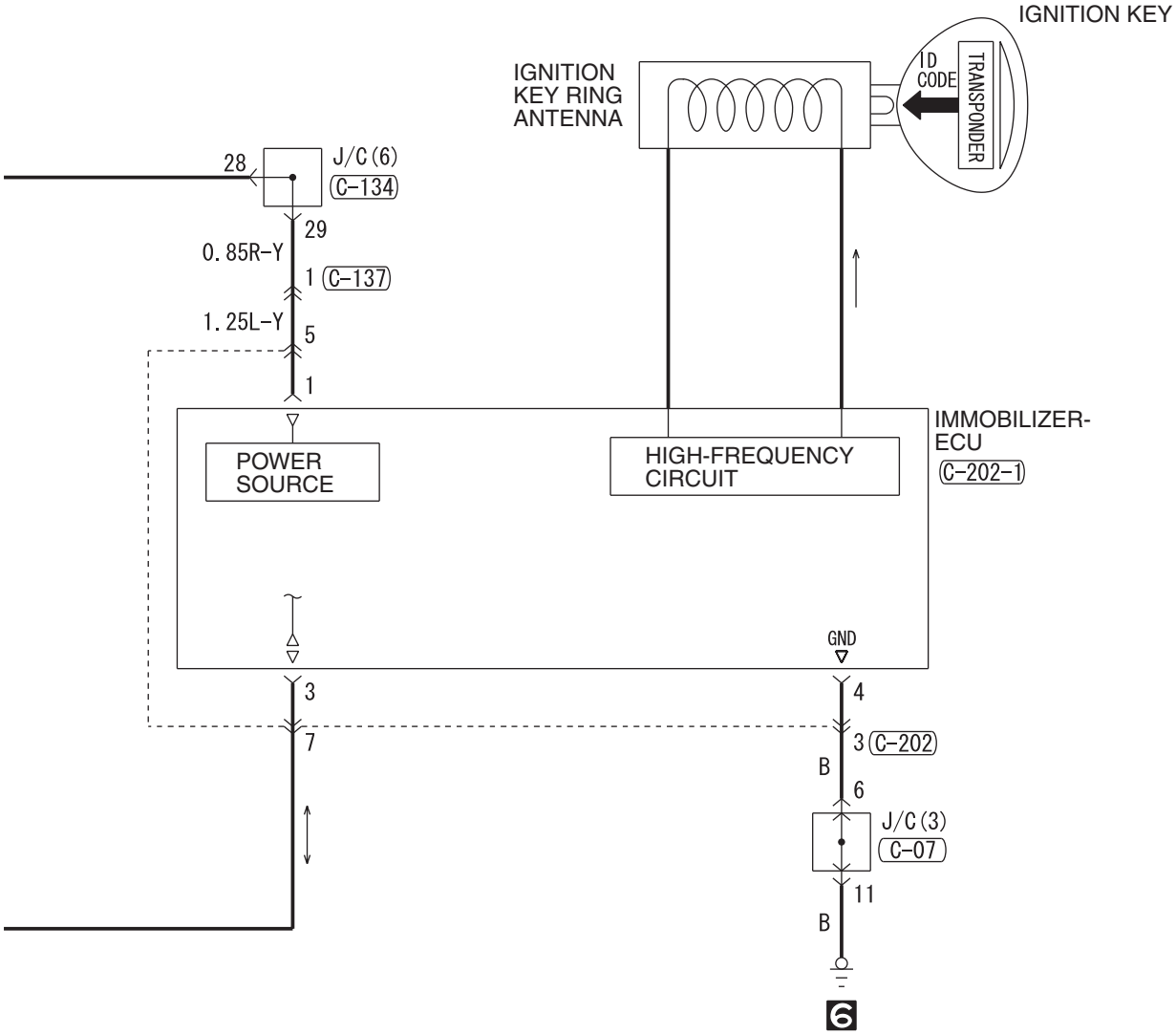

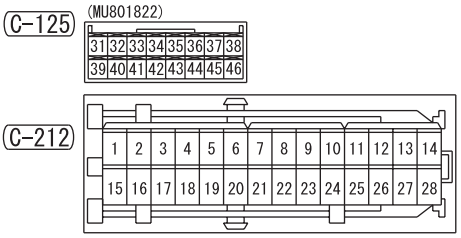

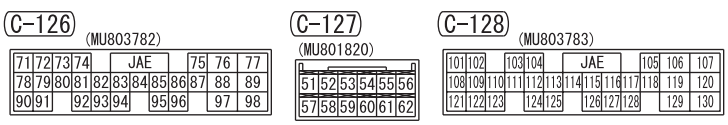

Wire colour code
B : Black LG : Light green G : Green L : Blue W : White
Y : Yellow SB : Sky blue BR : Brown O : Orange
GR : Grey R : Red P : Pink V : Violet PU : Purple

H6J15E29AB

ABS

ABS <LHD>

M1901019200334

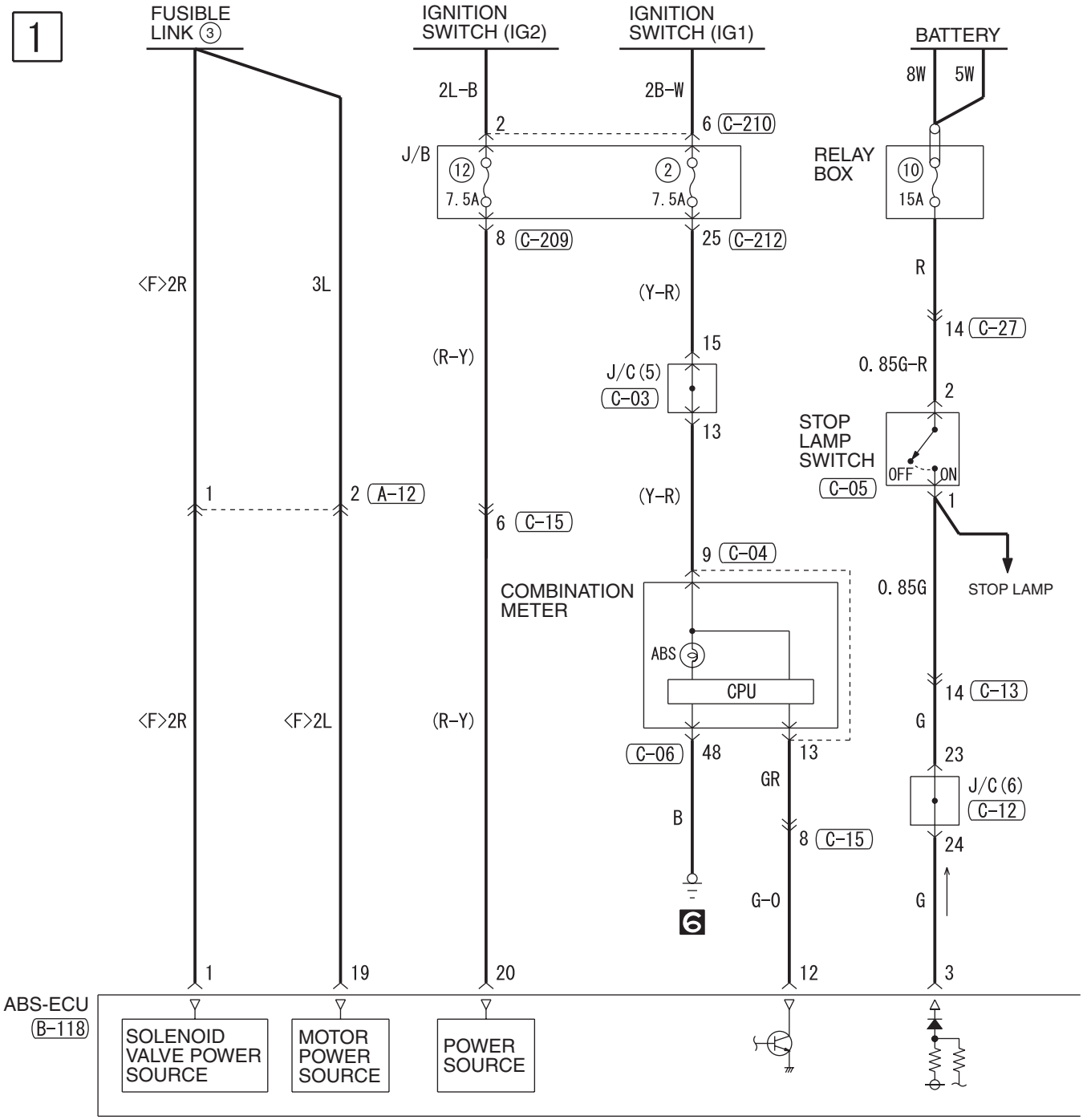

2

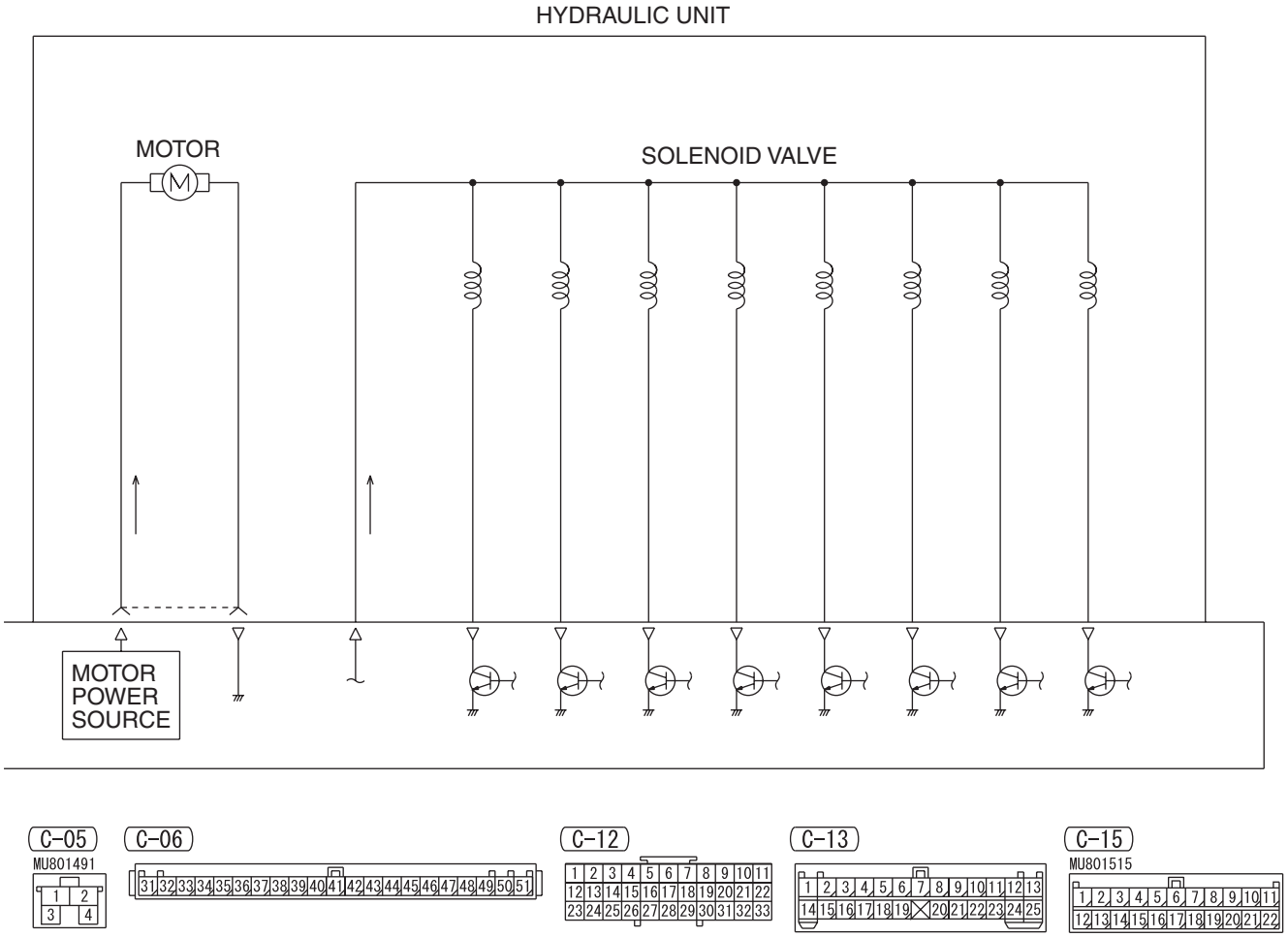

Wire colour code
B : Black LG : Light green G : Green L : Blue W : White Y : Yellow SB : Sky blue
BR : Brown O : Orange GR : Grey R : Red P : Pink V : Violet PU : Purple

H6J15E30AB

ABS <LHD> (CONTINUED)

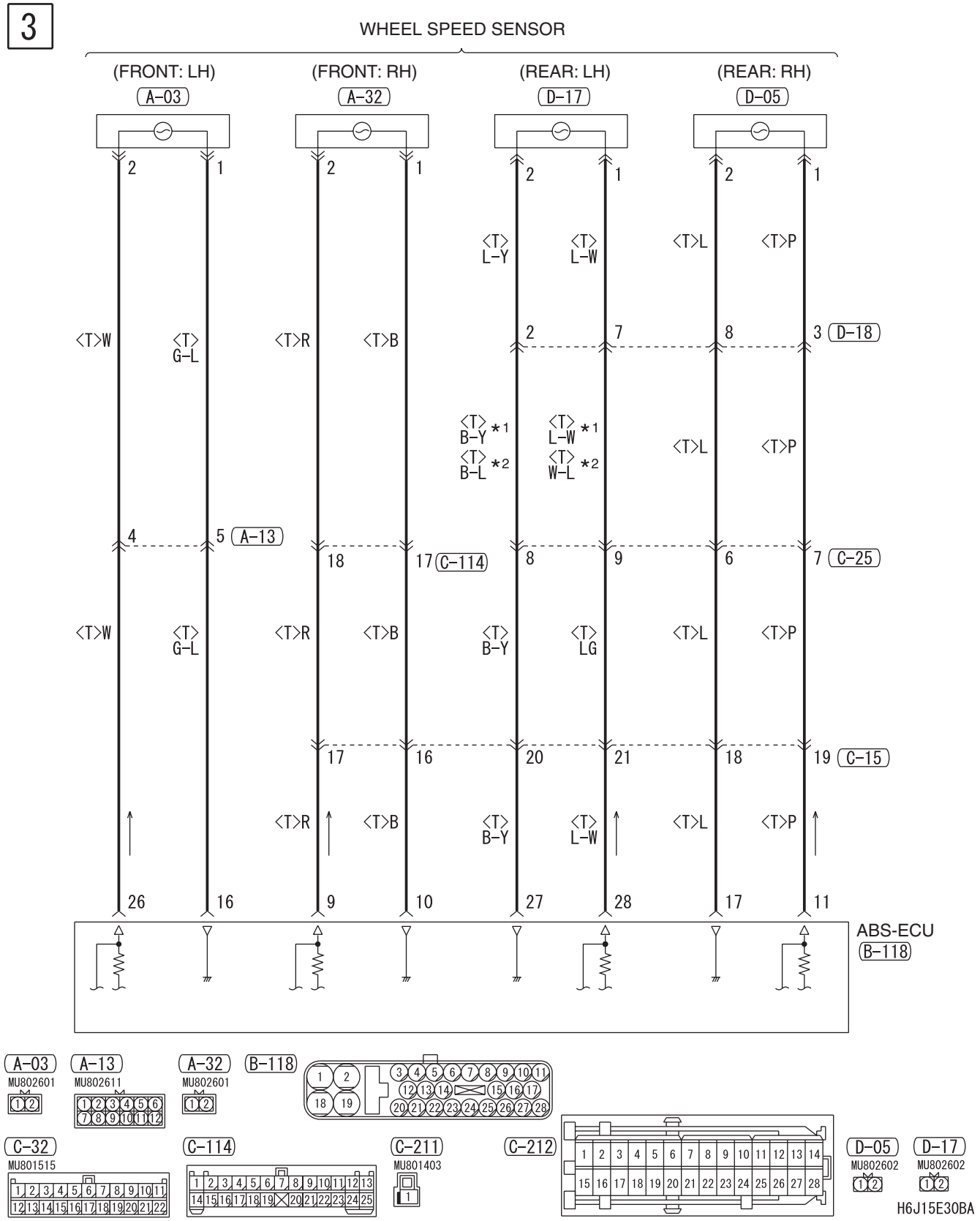

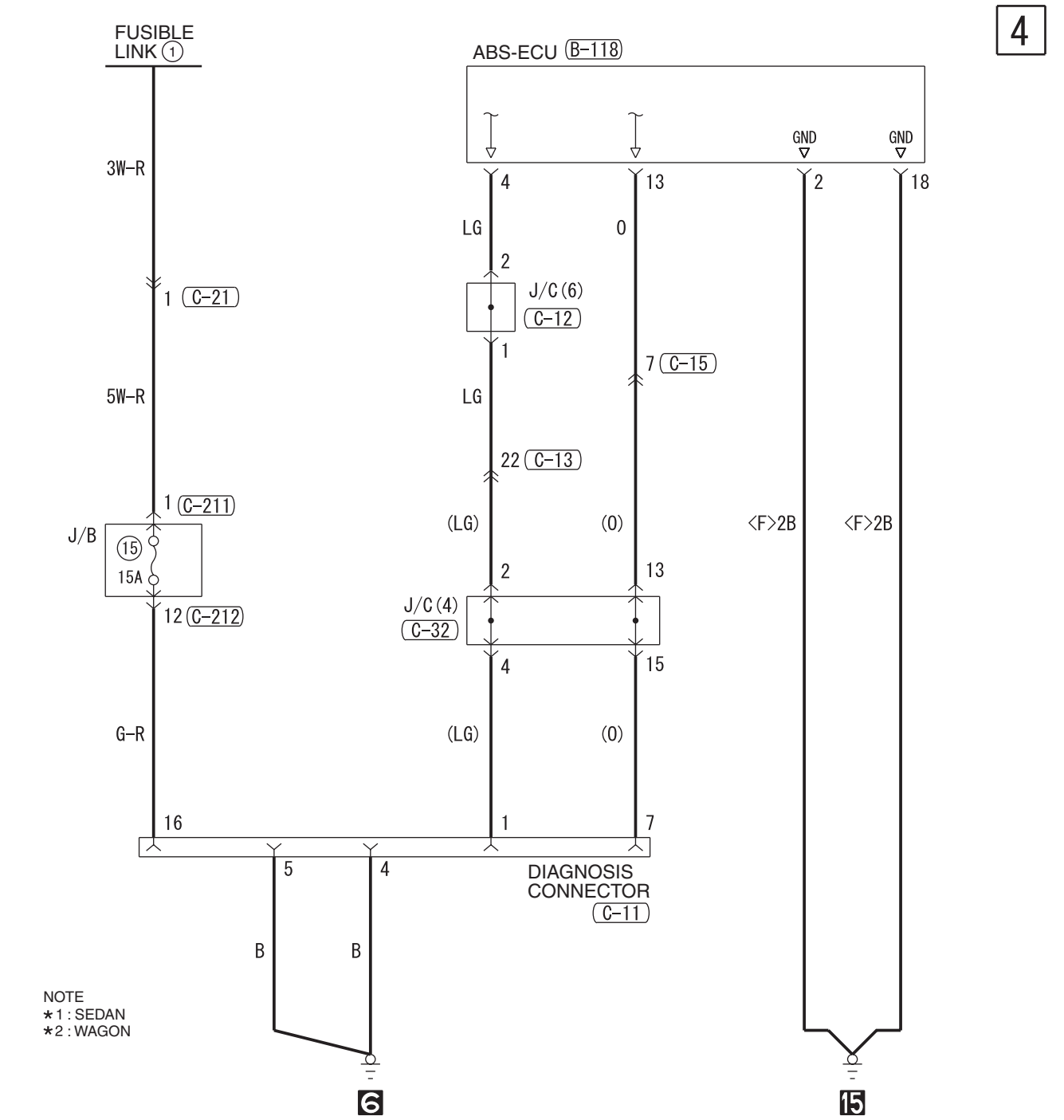

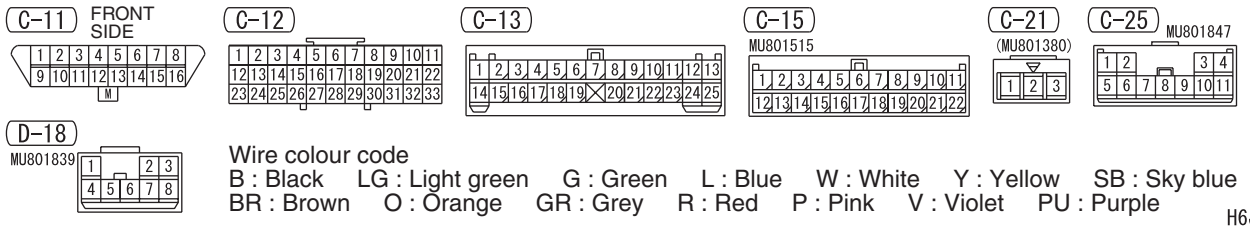

Wire colour code
B : Black LG : Light green G : Green L : Blue W : White Y : Yellow SB : Sky blue
BR : Brown O : Orange GR : Grey R : Red P : Pink V : Violet PU : Purple

H6J15E30BB

ABS <RHD>

M1901019200345

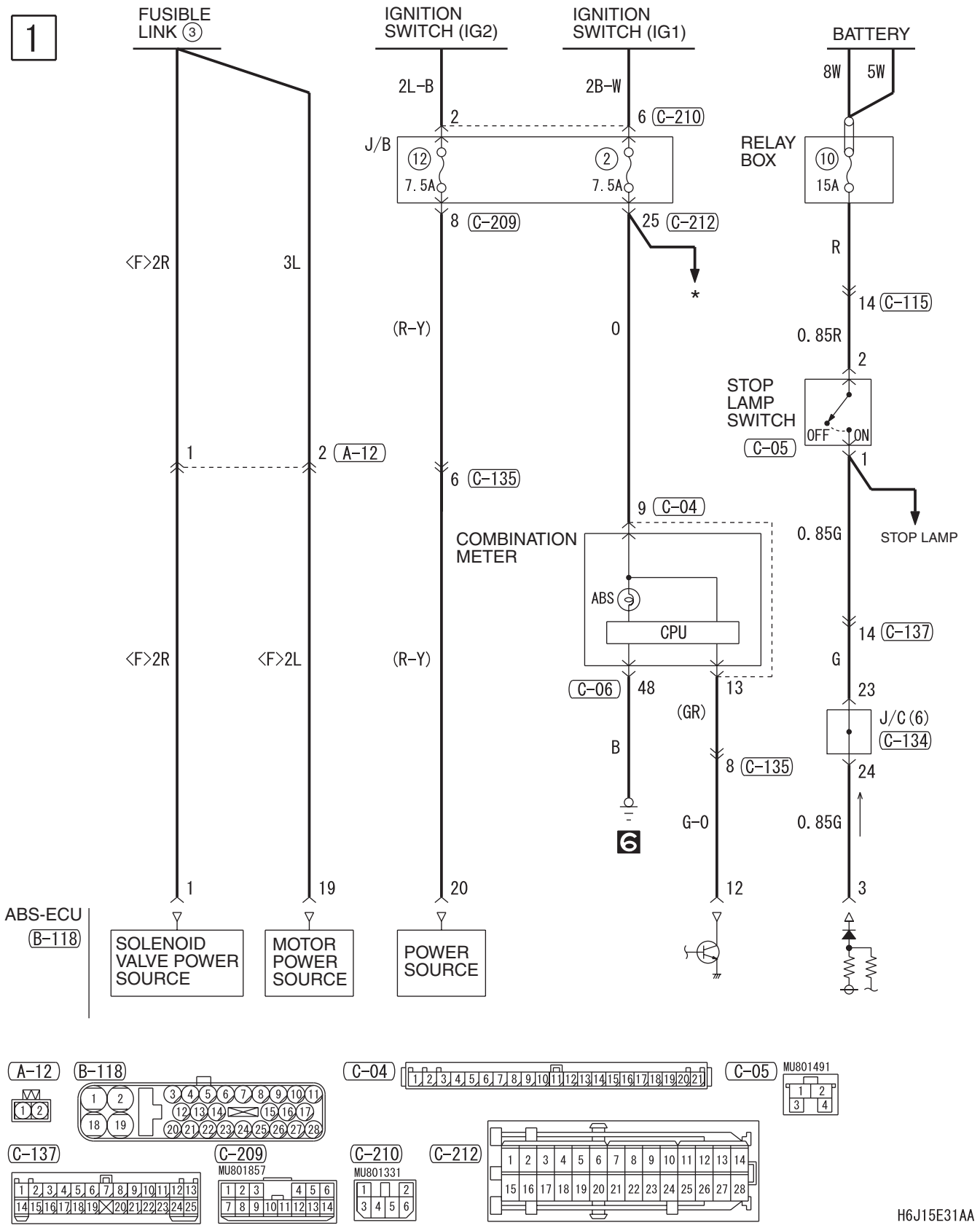

2

NOTE
*: TAIL LAMP,
POSITION LAMP,
LICENCE PLATE
LAMP AND LIGHTING
MONITOR BUZZER

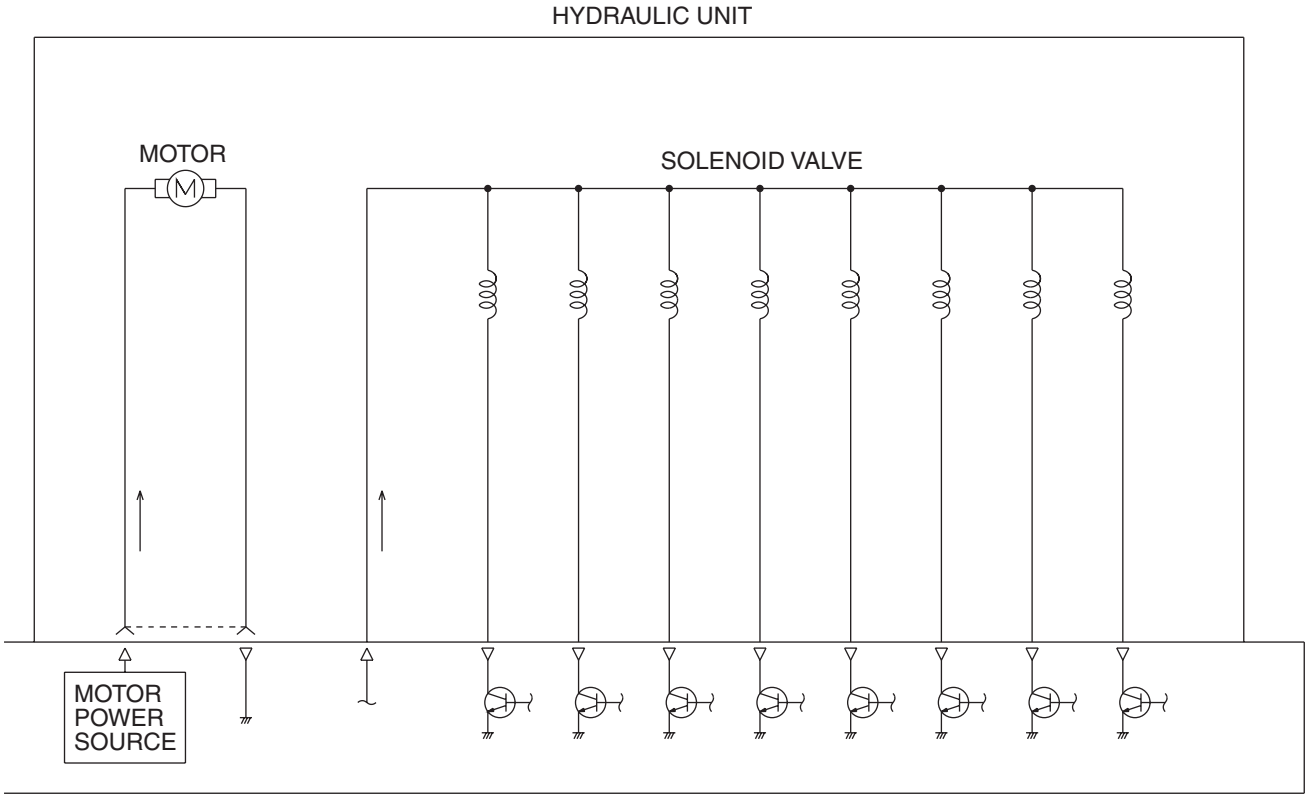

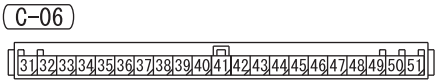

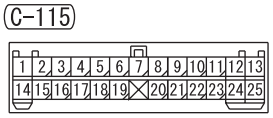

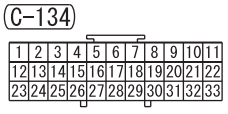

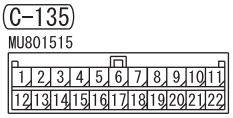

Wire colour code
B : Black LG : Light green G : Green L : Blue W : White Y : Yellow SB : Sky blue
BR : Brown O : Orange GR : Grey R : Red P : Pink V : Violet PU : Purple

H6J15E31AB

ABS <RHD> (CONTINUED)

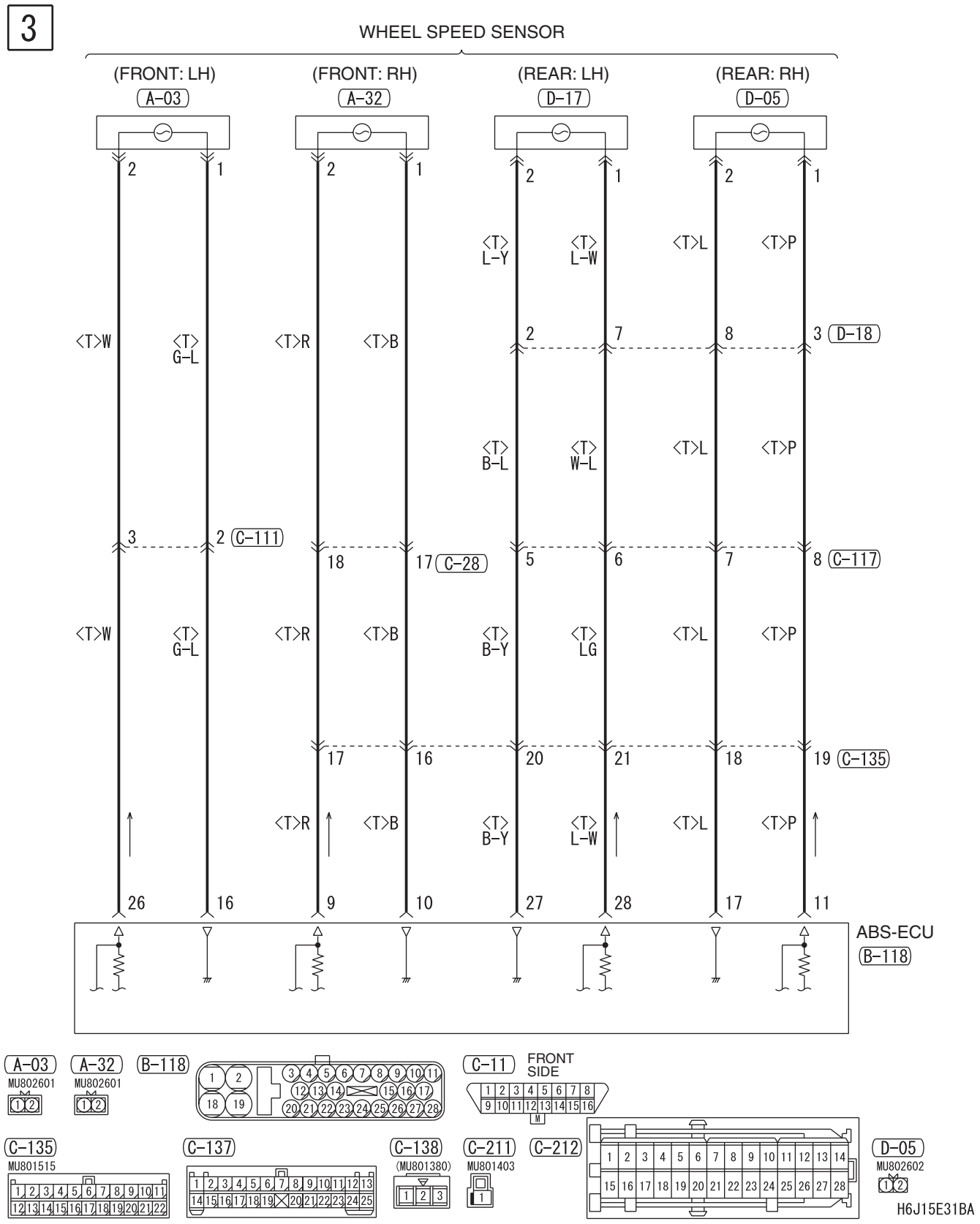

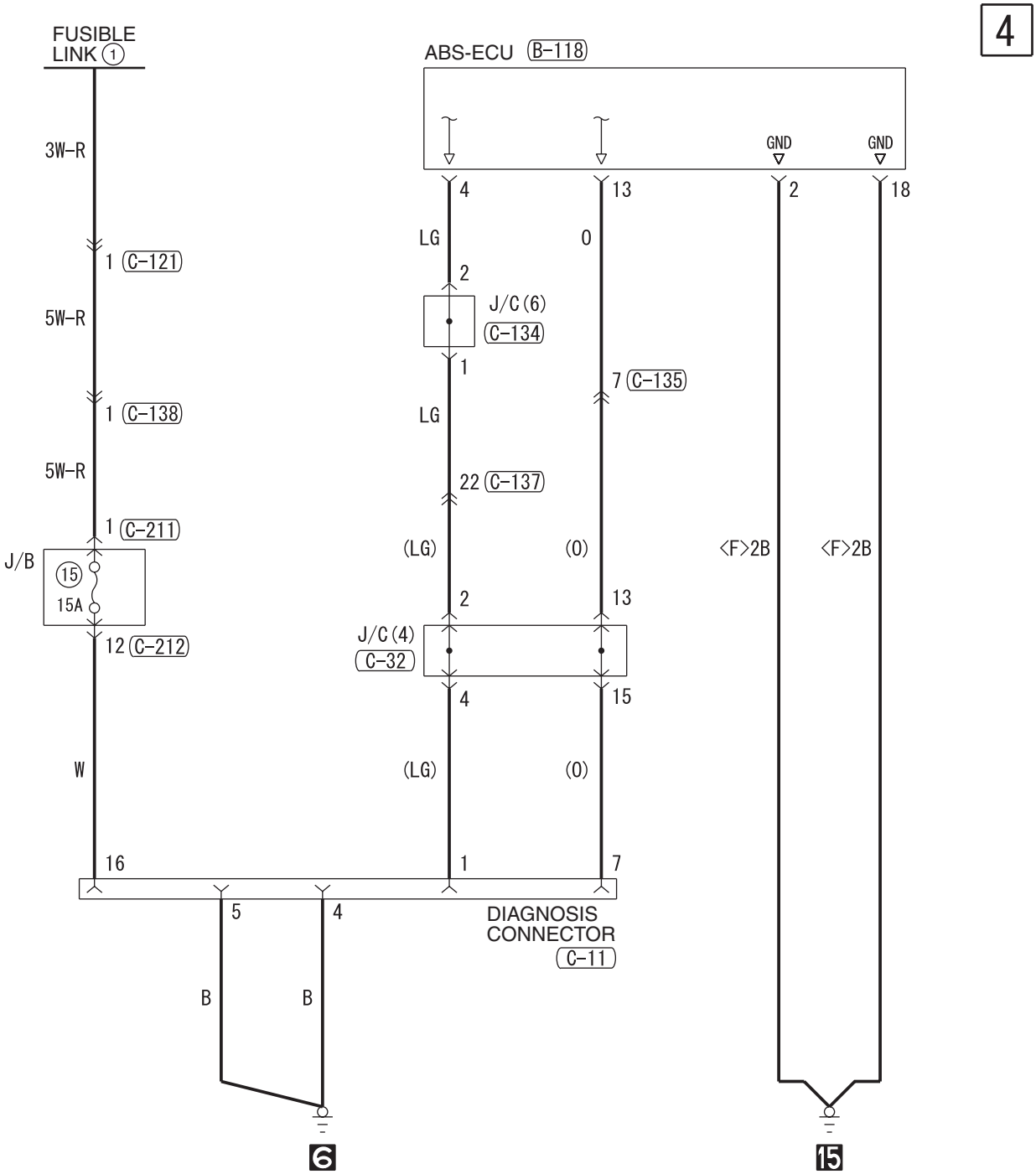

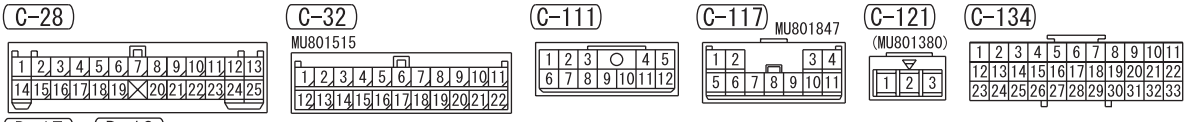

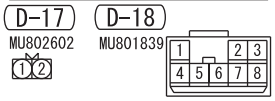

Wire colour code
B : Black LG : Light green G : Green L : Blue W : White Y : Yellow SB : Sky blue
BR : Brown O : Orange GR : Grey R : Red P : Pink V : Violet PU : Purple

H6J15E31BB

HEATED SEAT

M1901010700730

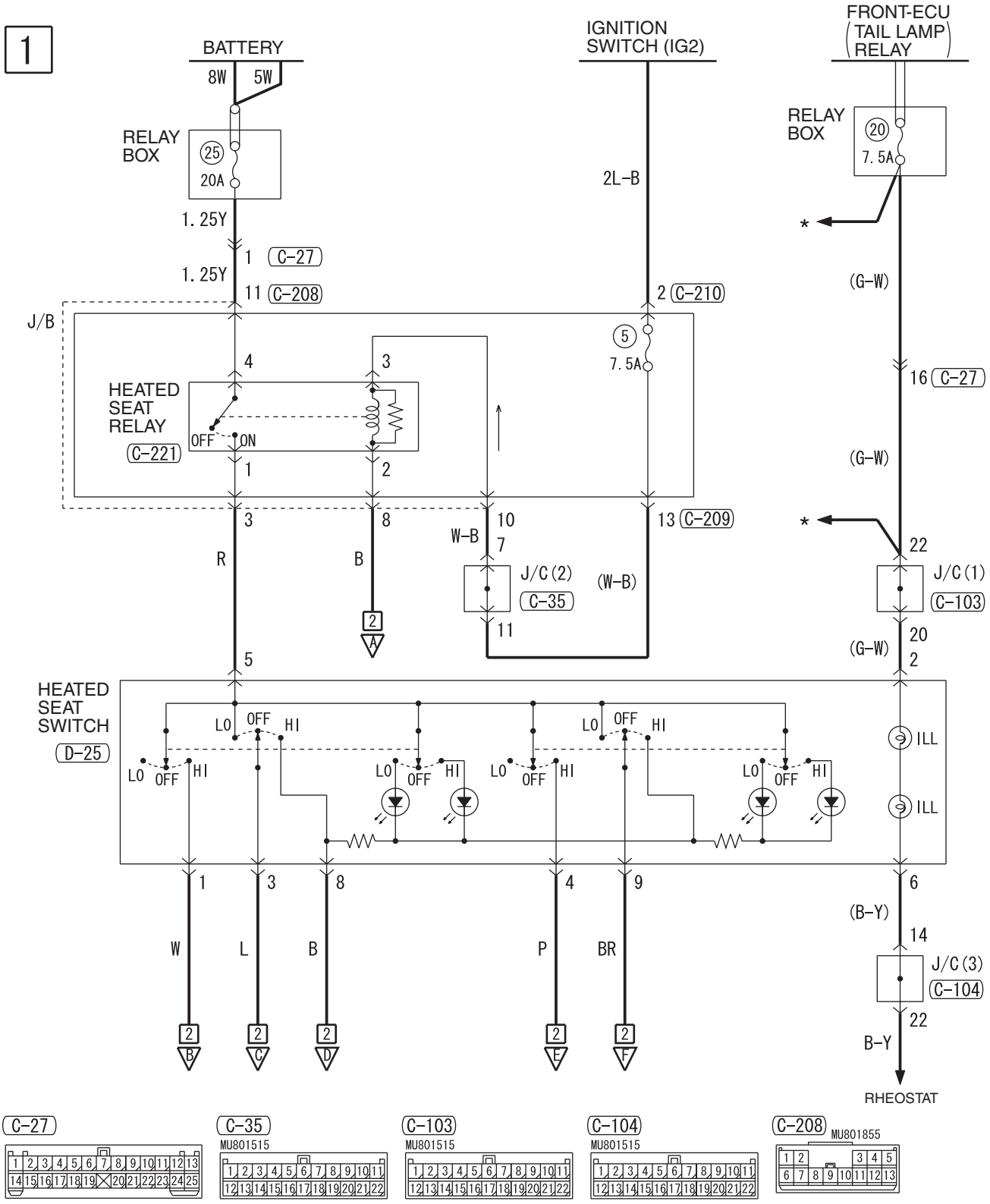

H6J15E32AA

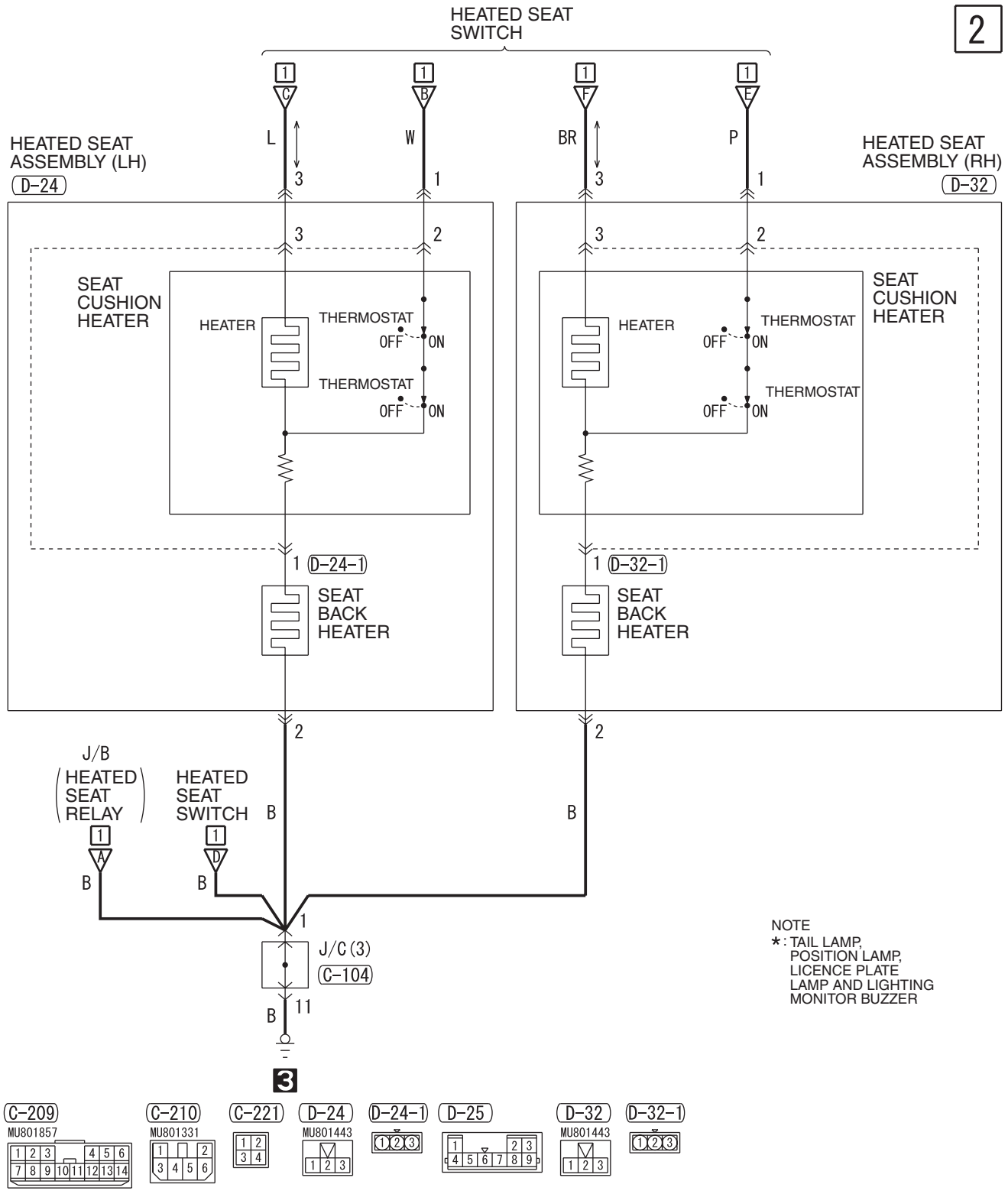

Wire colour code
B : Black LG : Light green G : Green L : Blue W : White Y : Yellow SB : Sky blue
BR : Brown O : Orange GR : Grey R : Red P : Pink V : Violet PU : Purple

H6J15E32AB

RHEOSTAT

RHEOSTAT <LHD>

M1901011101347

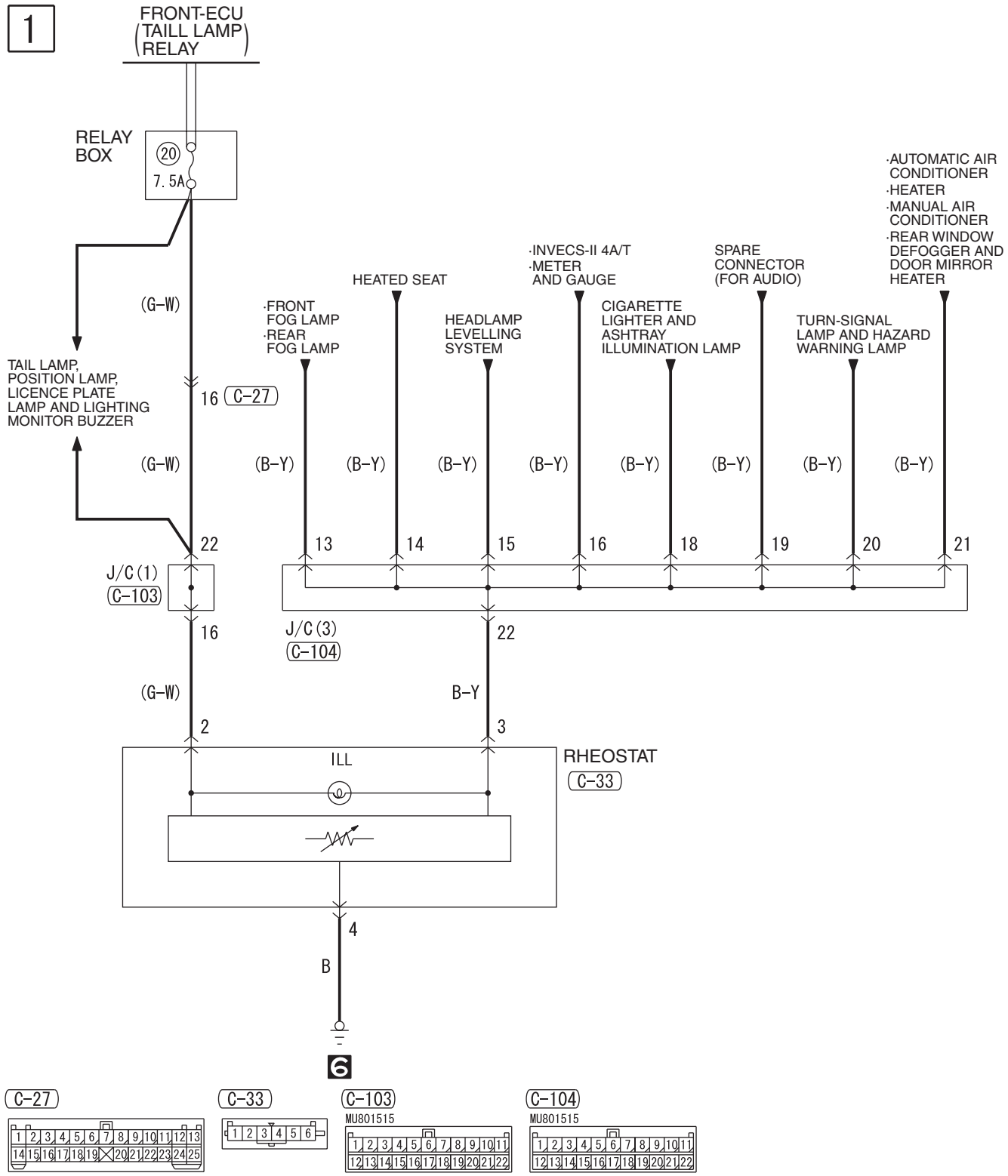

Wire colour code
B : Black LG : Light green G : Green L : Blue W : White Y : Yellow SB : Sky blue
BR : Brown O : Orange GR : Grey R : Red P : Pink V : Violet PU : Purple

H6J15E33AA

RHEOSTAT <RHD>

M1901011101358

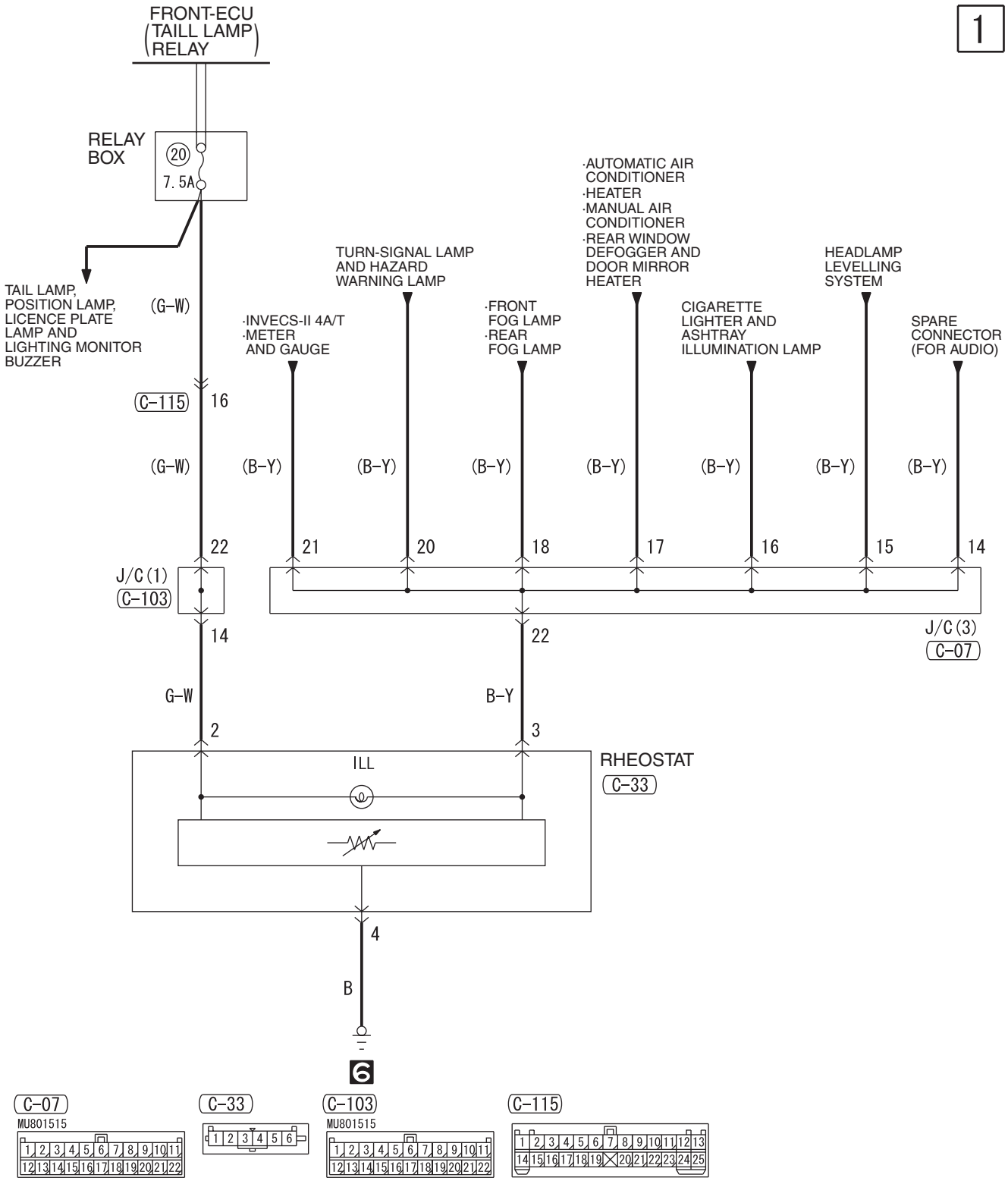

Wire colour code
B : Black LG : Light green G : Green L : Blue W : White Y : Yellow SB : Sky blue
BR : Brown O : Orange GR : Grey R : Red P : Pink V : Violet PU : Purple

H6J15E34AA

SUPPLEMENTAL RESTRAINT SYSTEM (SRS)

SUPPLEMENTAL RESTRAINT SYSTEM (SRS) <LHD>

M1901009702033

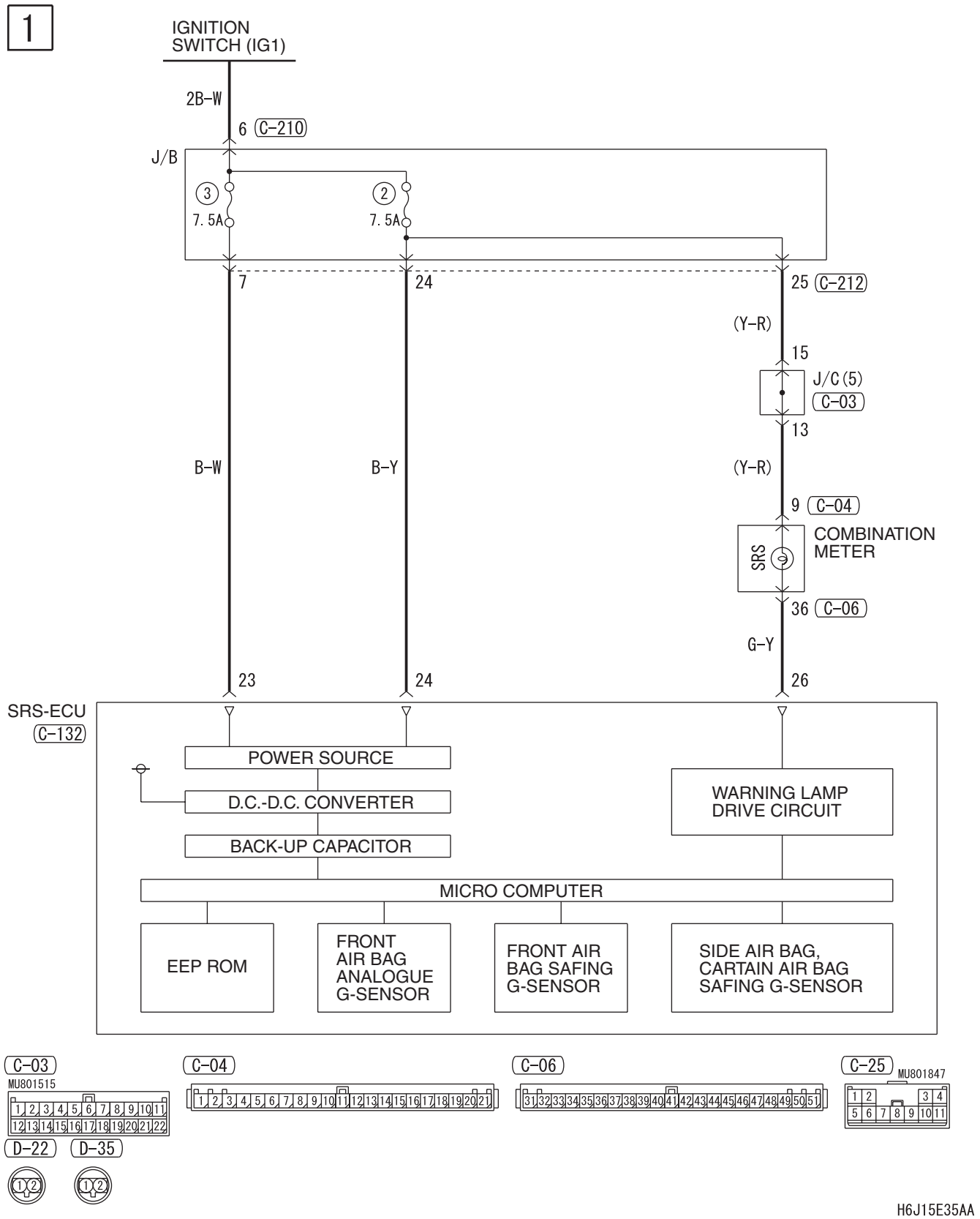

2

NOTE
*1: CONNECTOR COUPLED: ON
CONNECTOR UNCOUPLED: OFF
*2: SEDAN
*3: WAGON

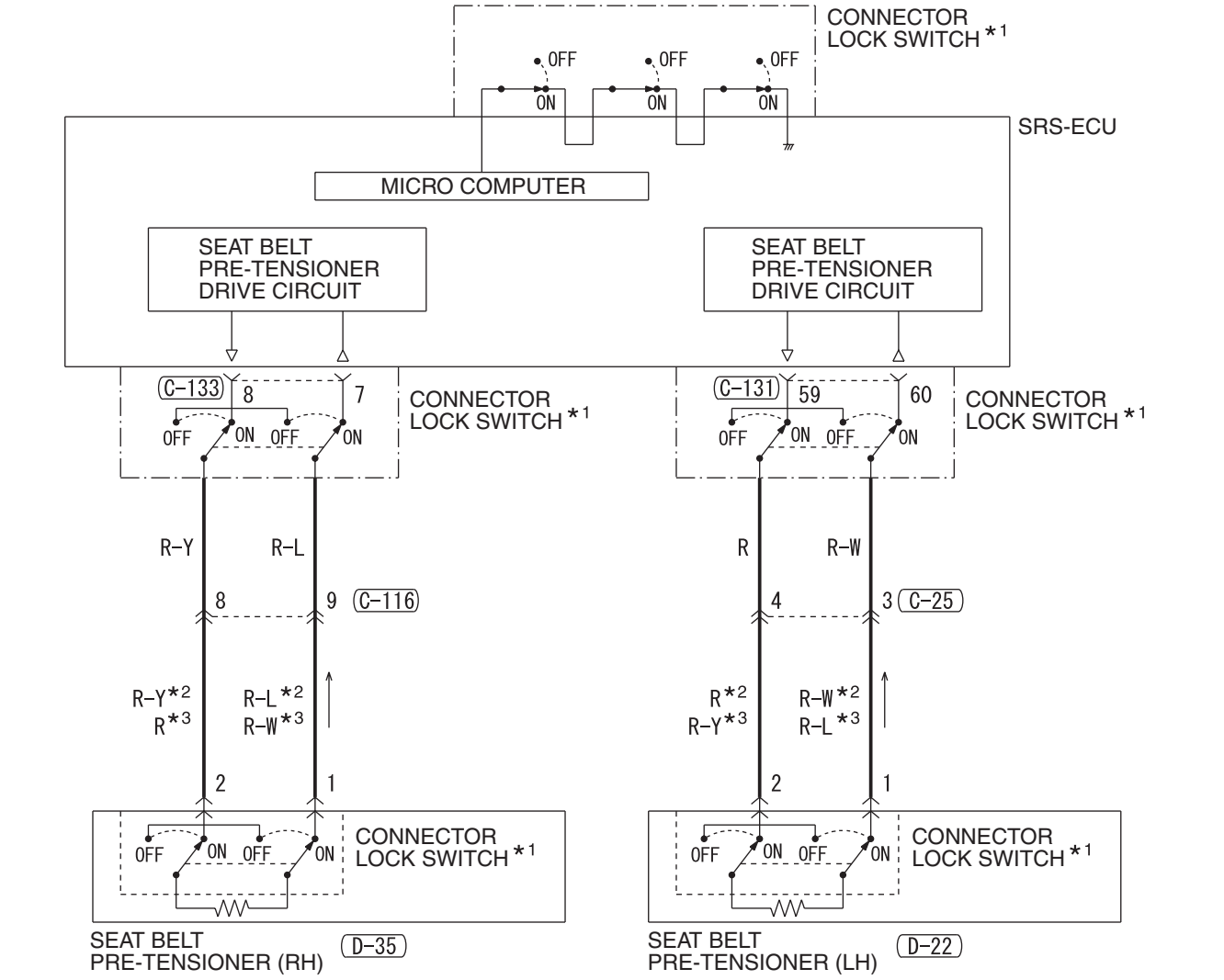

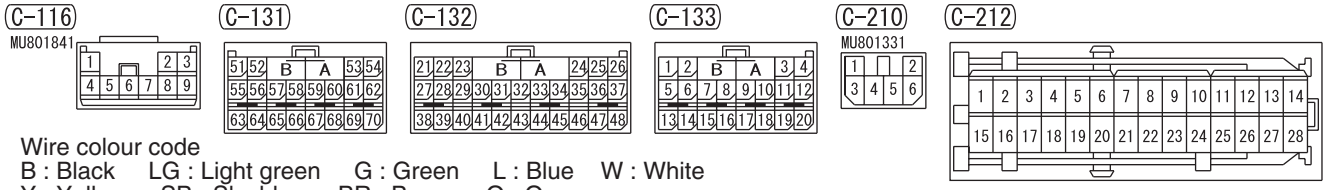

Wire colour code
B : Black LG : Light green G : Green L : Blue W : White
Y : Yellow SB : Sky blue BR : Brown O : Orange
GR : Grey R : Red P : Pink V : Violet PU : Purple

H6J15E35AB

SUPPLEMENTAL RESTRAINT SYSTEM (SRS) <LHD> (CONTINUED)

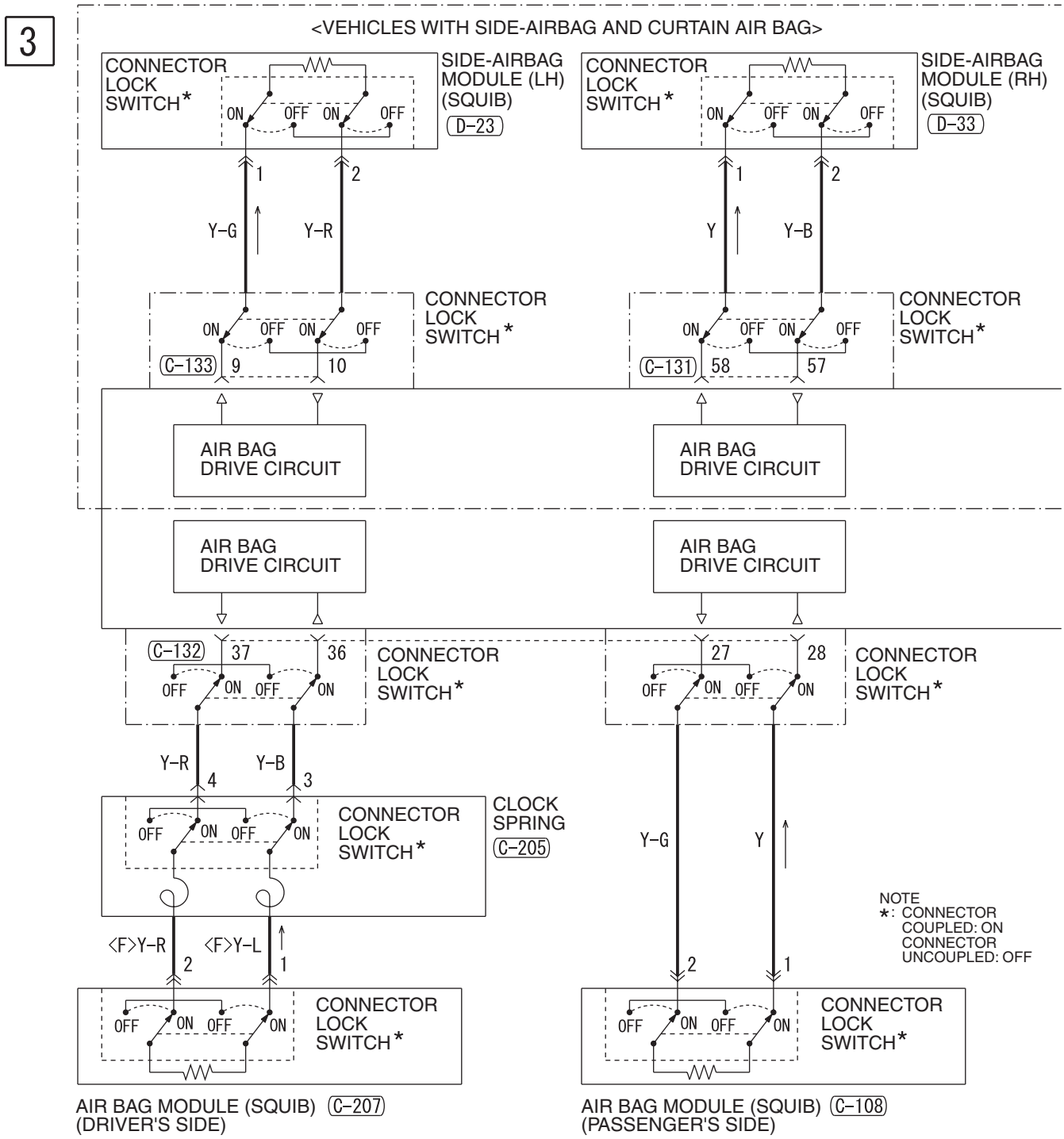

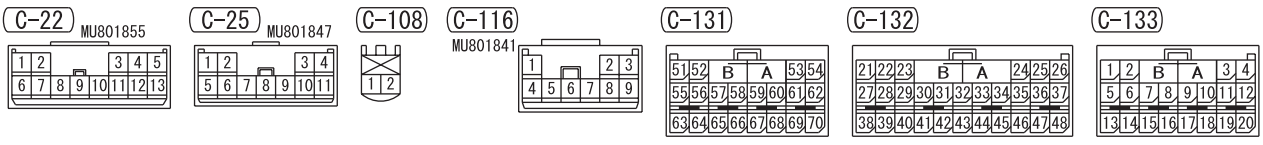

H6J15E35BA

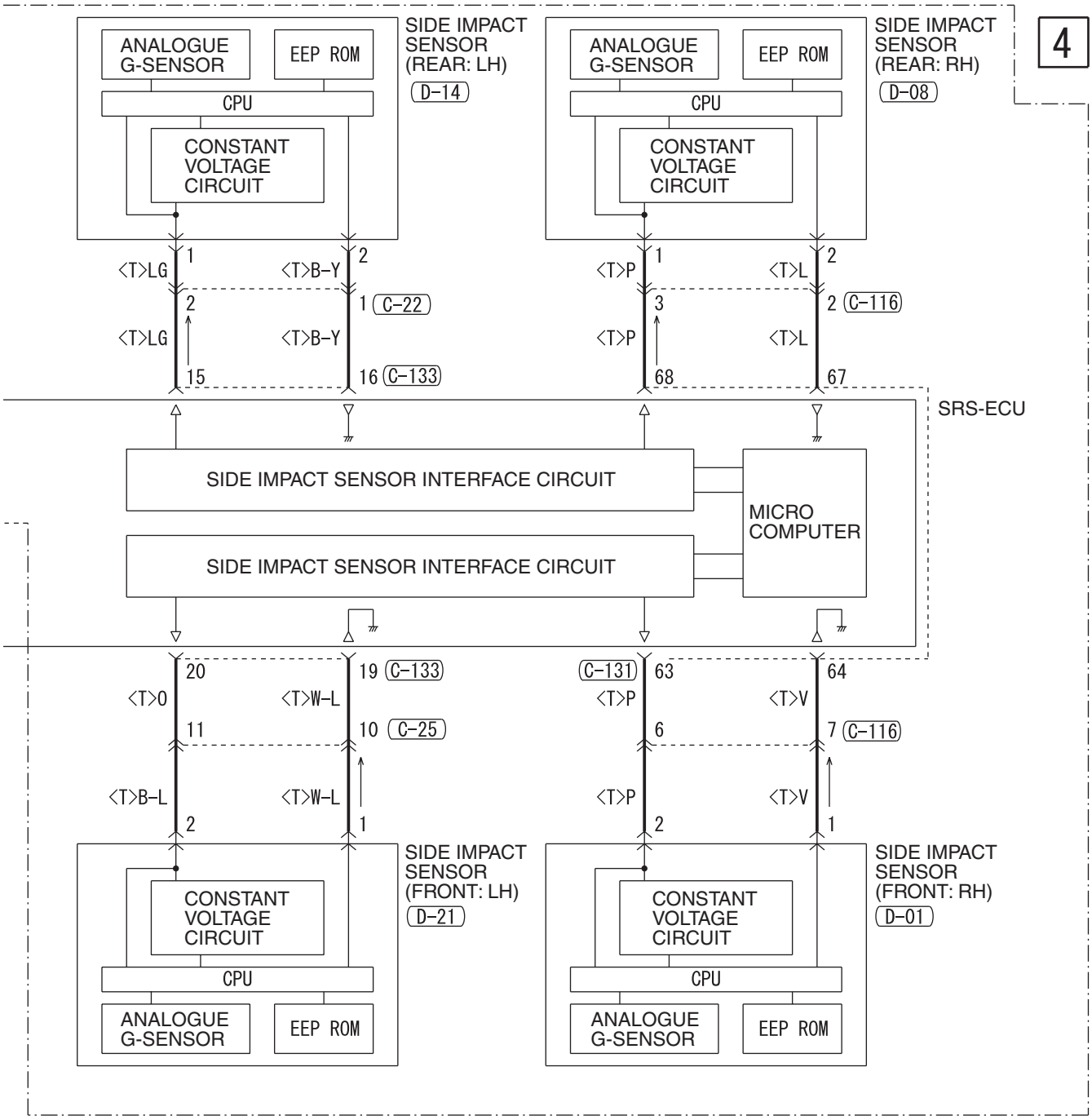

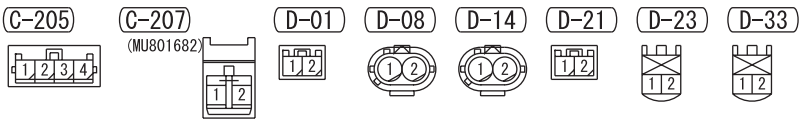

Wire colour code
B : Black LG : Light green G : Green L : Blue W : White Y : Yellow SB : Sky blue
BR : Brown O : Orange GR : Grey R : Red P : Pink V : Violet PU : Purple

H6J15E35BB

SUPPLEMENTAL RESTRAINT SYSTEM (SRS) <LHD> (CONTINUED)

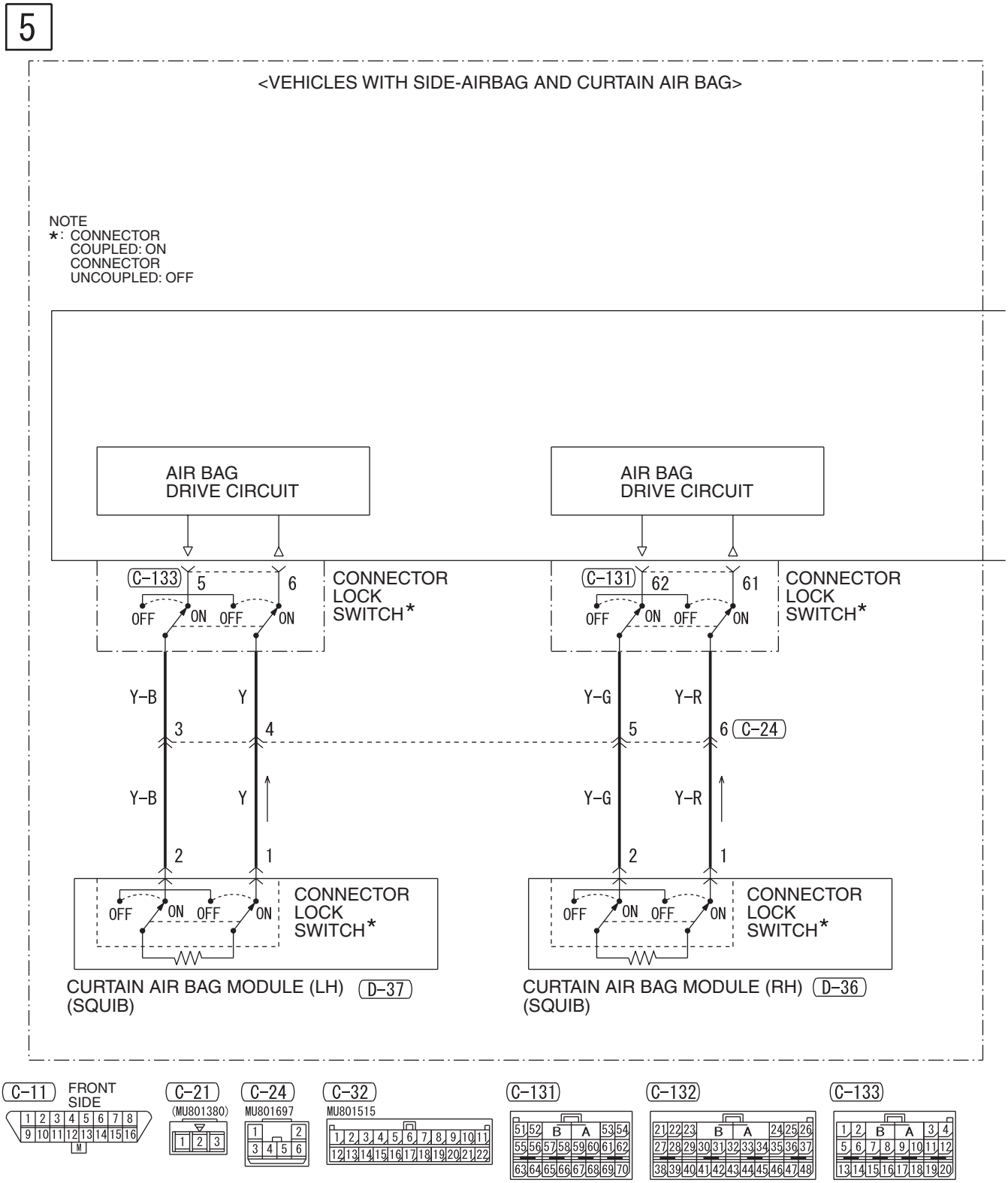

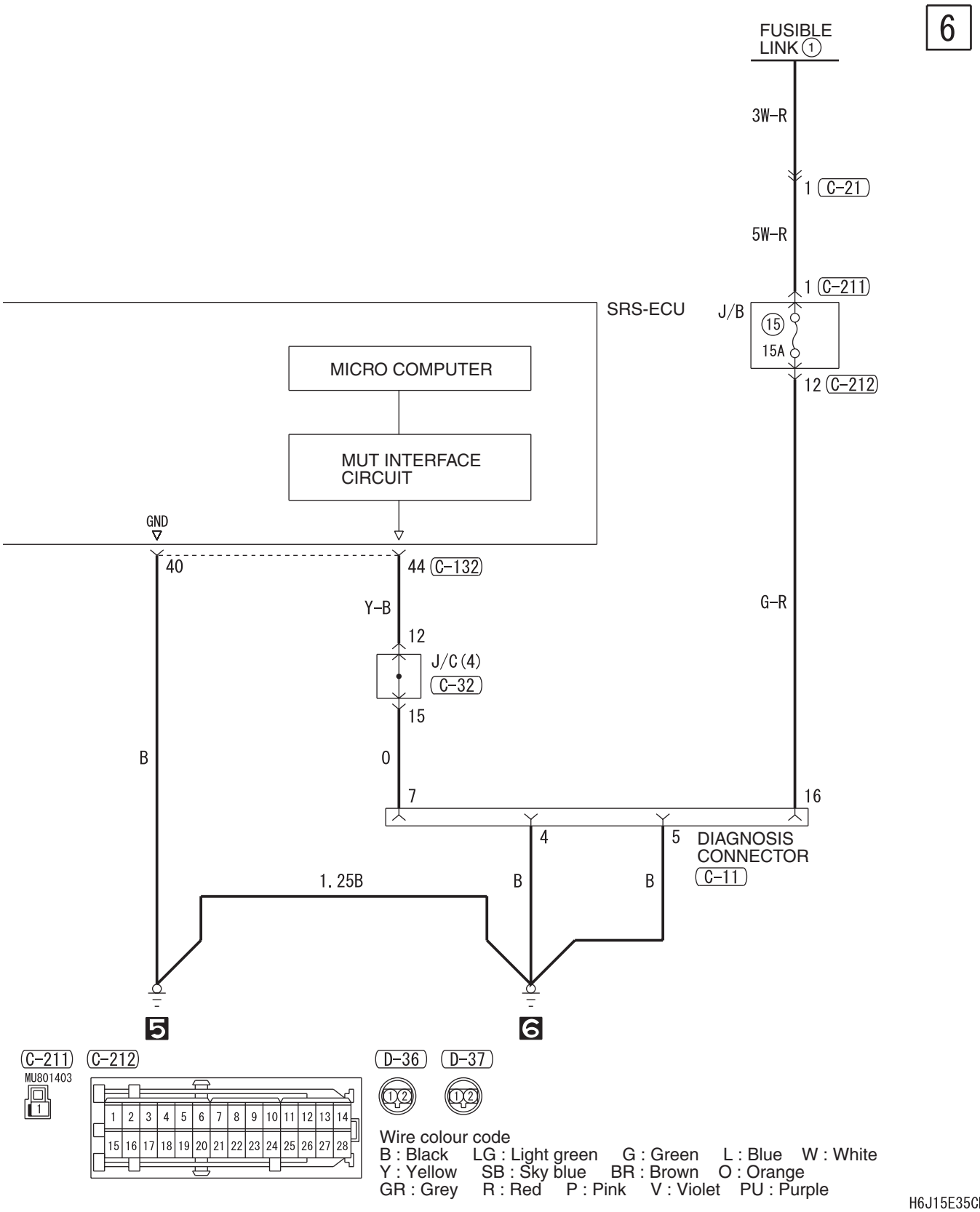
6
FUSIBLE LINK 1
3W-R
1 C-21
5W-R
1 C-211
SRS-ECU
J/B
15
15A
12 C-212
MICRO COMPUTER
MUT INTERFACE CIRCUIT
GND
40
44 C-132
Y-B
12
J/C (4)
C-32
15
B
O
7
G-R
16
4
5
DIAGNOSIS CONNECTOR
C-11
1.25B
B
B
5
6
C-211
C-212
MU801403
D-36
D-37
Wire colour code
B : Black LG : Light green G : Green L : Blue W : White
Y : Yellow SB : Sky blue BR : Brown O : Orange
GR : Grey R : Red P : Pink V : Violet PU : Purple
H6J15E35CB

SUPPLEMENTAL RESTRAINT SYSTEM (SRS) <RHD>

M1901009702044

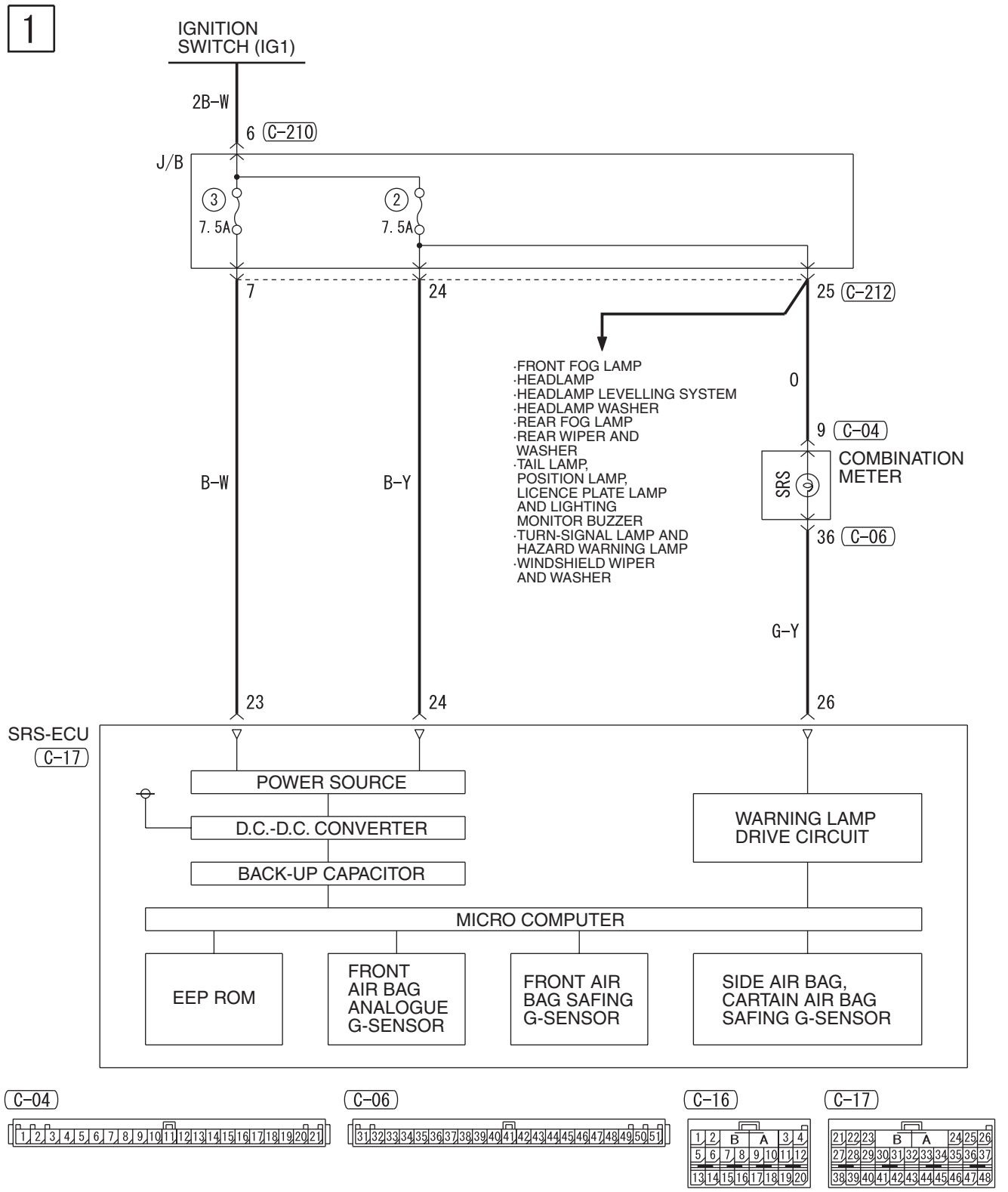

2

NOTE
*1: CONNECTOR COUPLED: ON
CONNECTOR UNCOUPLED: OFF
*2: SEDAN
*3: WAGON

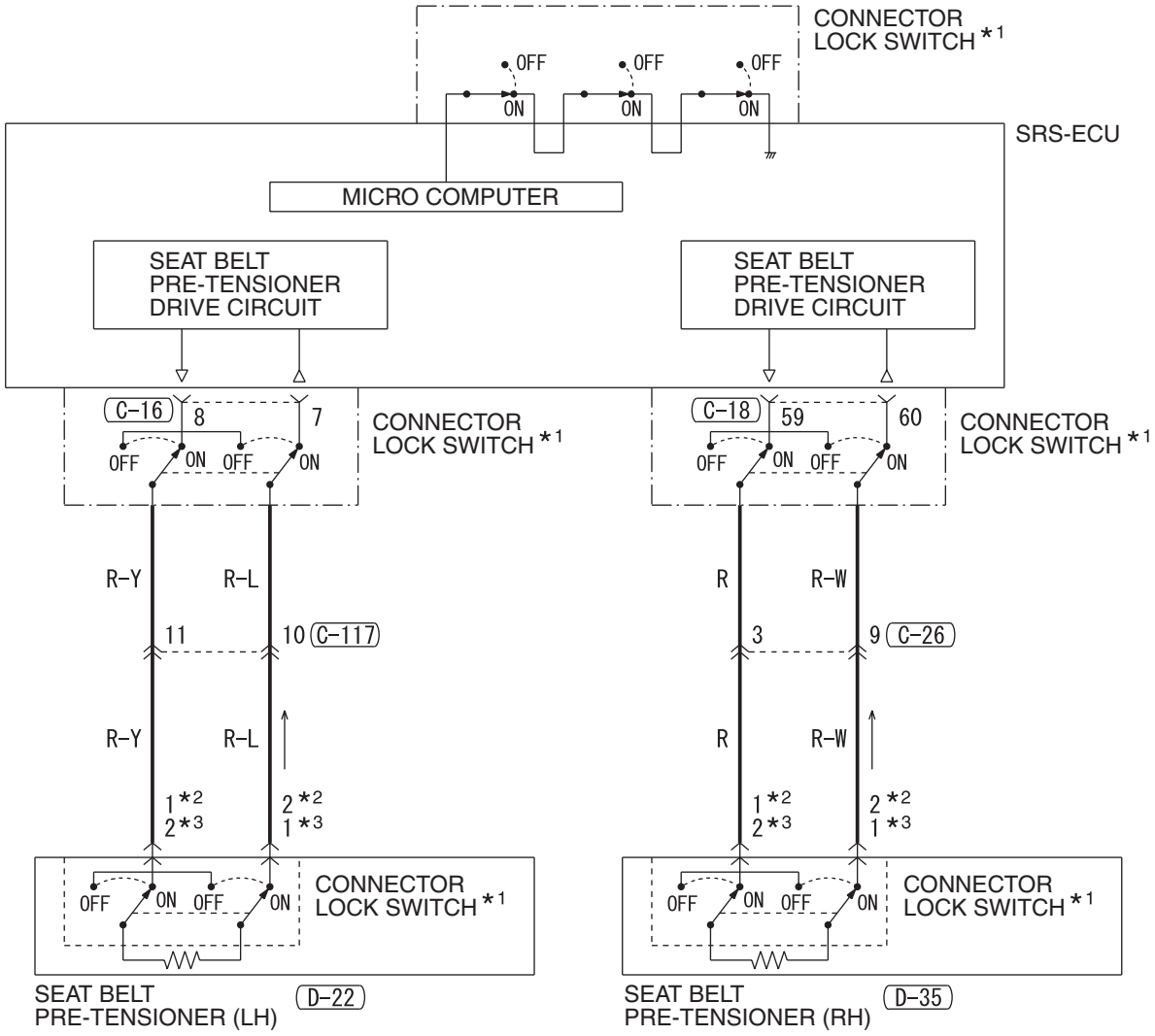

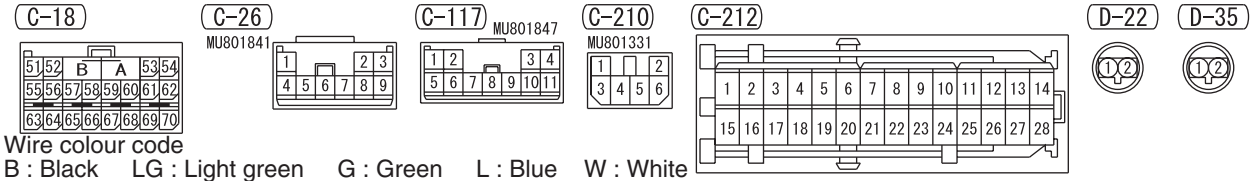

Wire colour code
B : Black LG : Light green G : Green L : Blue W : White
Y : Yellow SB : Sky blue BR : Brown O : Orange
GR : Grey R : Red P : Pink V : Violet PU : Purple

H6J15E36AB

SUPPLEMENTAL RESTRAINT SYSTEM (SRS) <RHD> (CONTINUED)

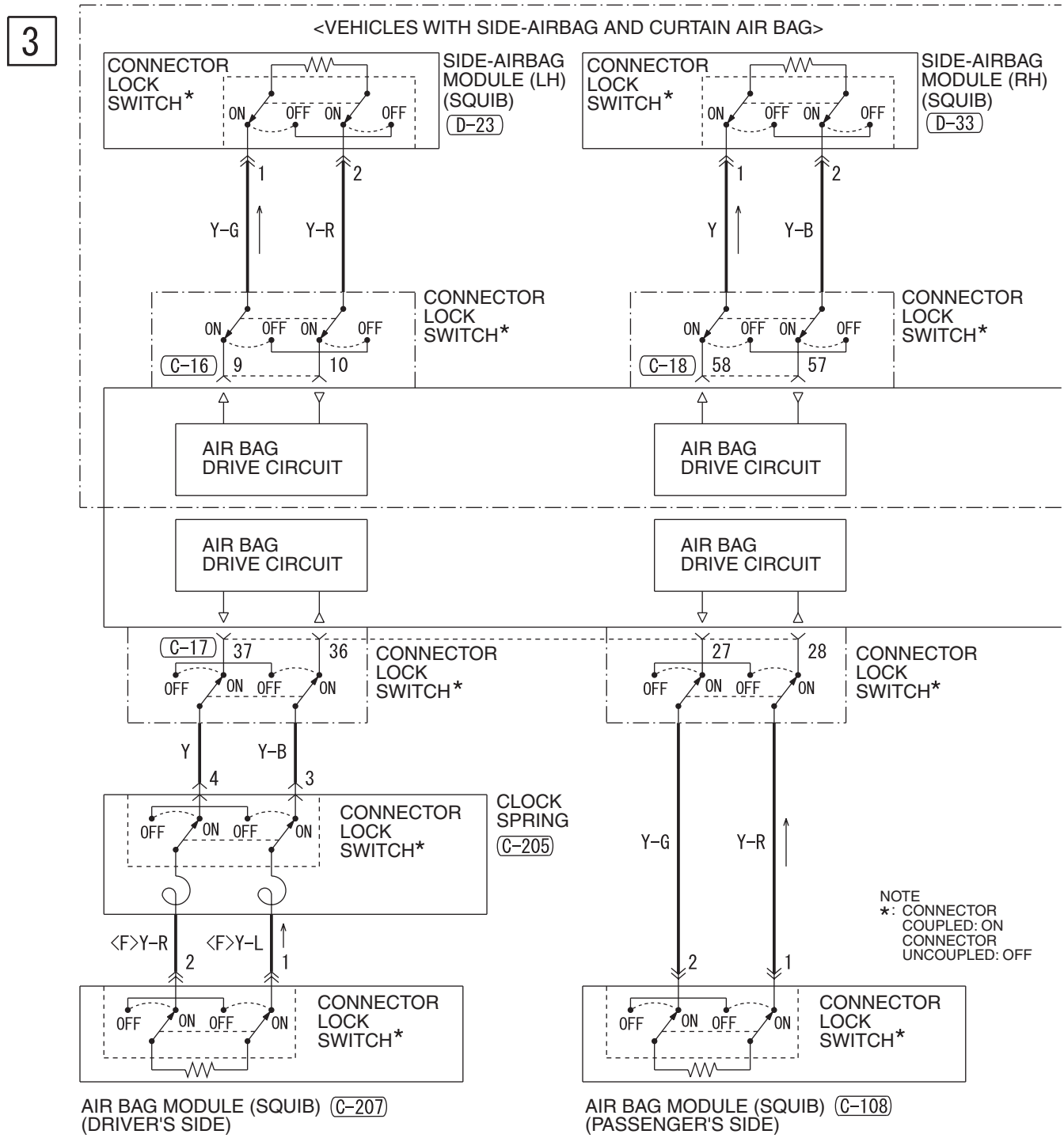

H6J15E36BA

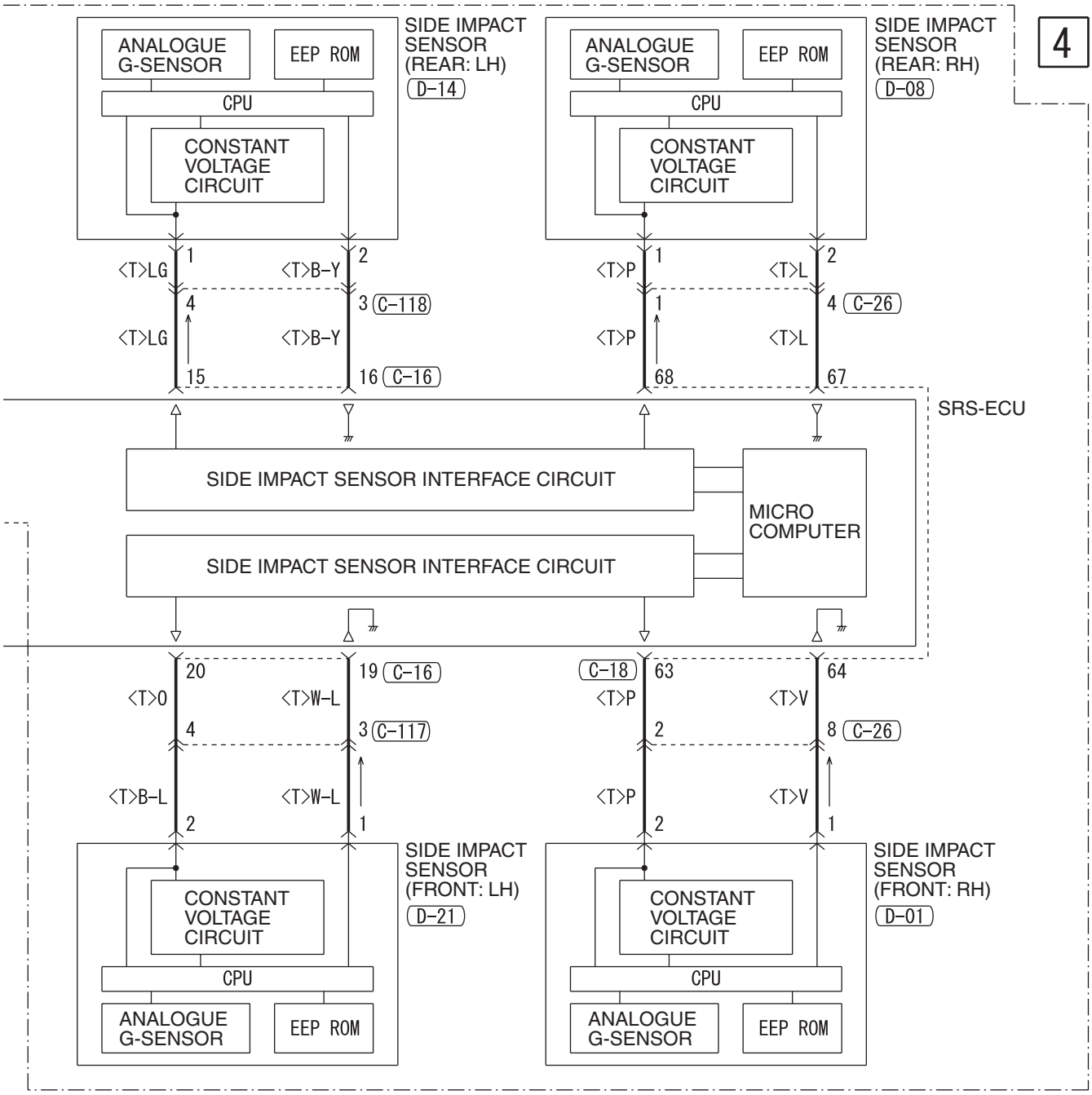

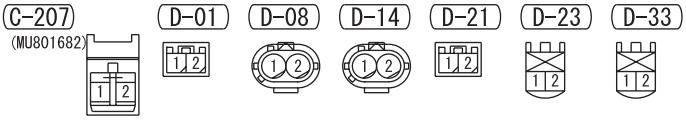

Wire colour code
B : Black LG : Light green G : Green L : Blue W : White Y : Yellow SB : Sky blue
BR : Brown O : Orange GR : Grey R : Red P : Pink V : Violet PU : Purple

H6J15E36BB

SUPPLEMENTAL RESTRAINT SYSTEM (SRS) <RHD> (CONTINUED)

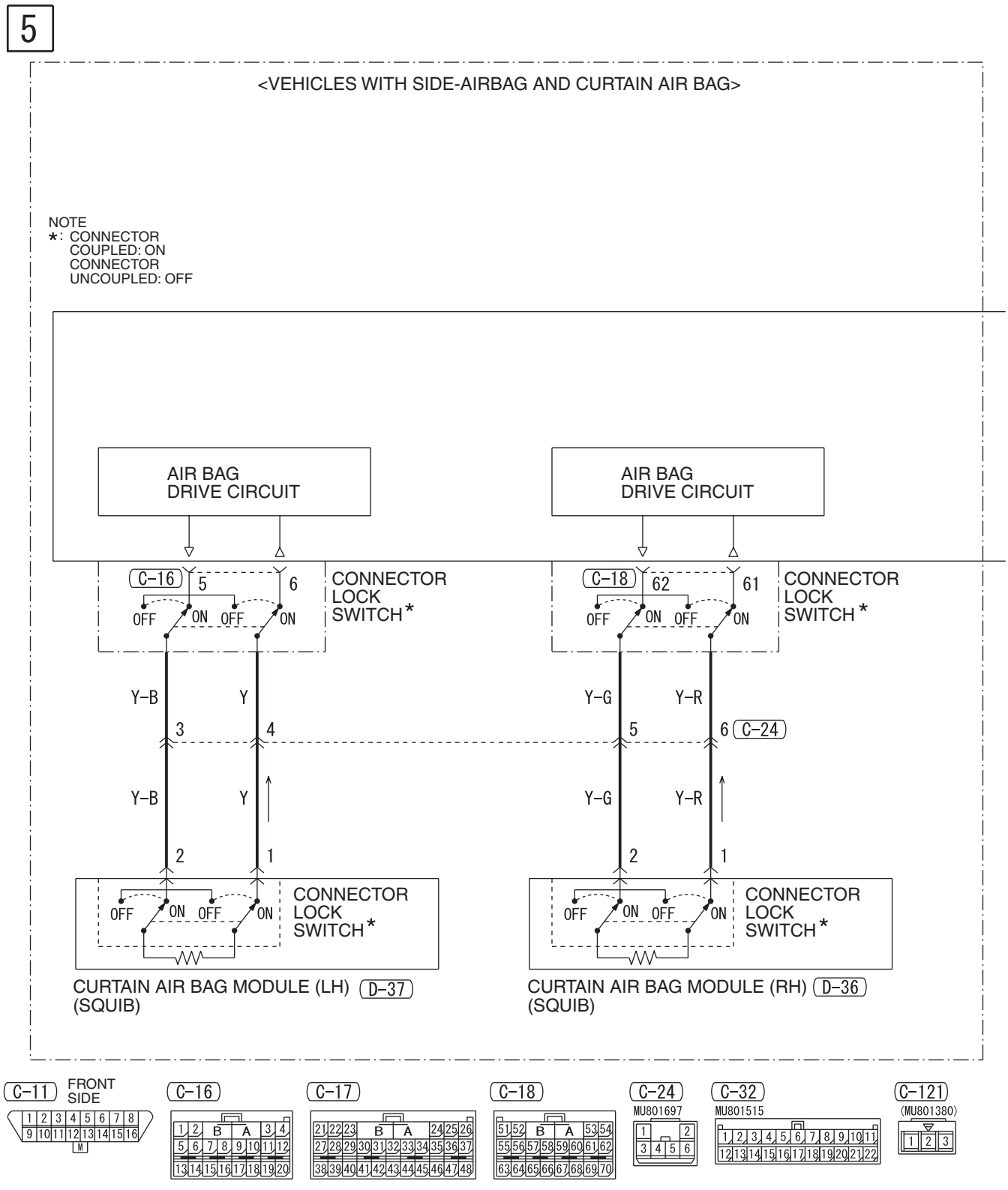

H6J15E36CA

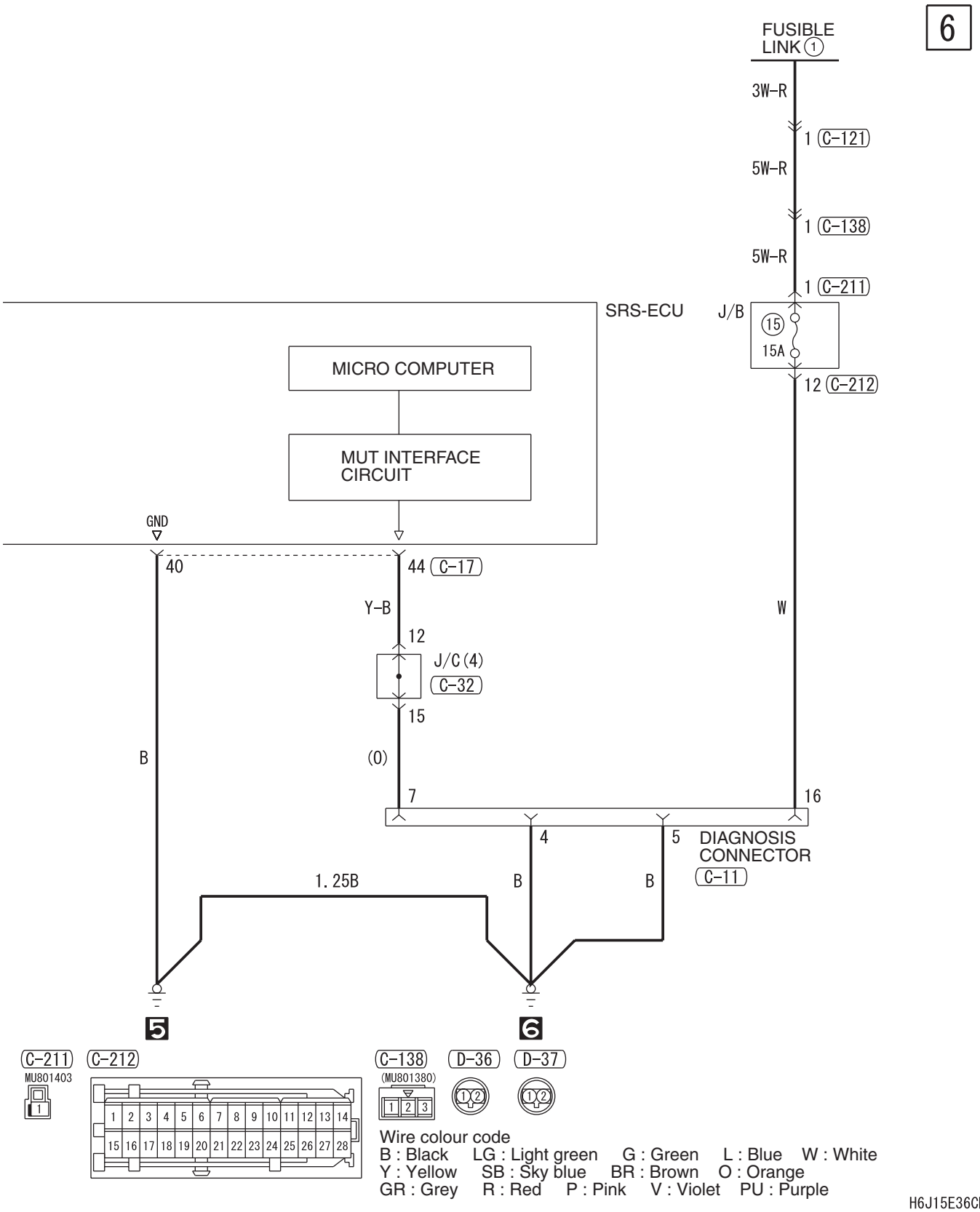
6
FUSIBLE LINK 1
3W-R
1 C-121
5W-R
1 C-138
5W-R
1 C-211
SRS-ECU
J/B
15
15A
12 C-212
MICRO COMPUTER
MUT INTERFACE CIRCUIT
GND
40
44 C-17
Y-B
W
12
J/C (4)
C-32
15
B
(O)
7
16
4
5
DIAGNOSIS CONNECTOR
C-11
1.25B
B
B
5
6
C-211
MU801403
C-212
C-138
(MU801380)
D-36
D-37
Wire colour code
B : Black LG : Light green G : Green L : Blue W : White
Y : Yellow SB : Sky blue BR : Brown O : Orange
GR : Grey R : Red P : Pink V : Violet PU : Purple
H6J15E36CB

SPARE CONNECTOR (FOR FRONT FOG LAMP)

M1901019300320